Certain Bearings From China, France, Germany, Italy, Japan, Singapore, and the United Kingdom

Investigation Nos. 731-TA-344, 391-A, 392-A and C, 393-A, 394-A, 396, and 399-A (Second Review)

Publication 3876 **August 2006**

U.S. International Trade Commission

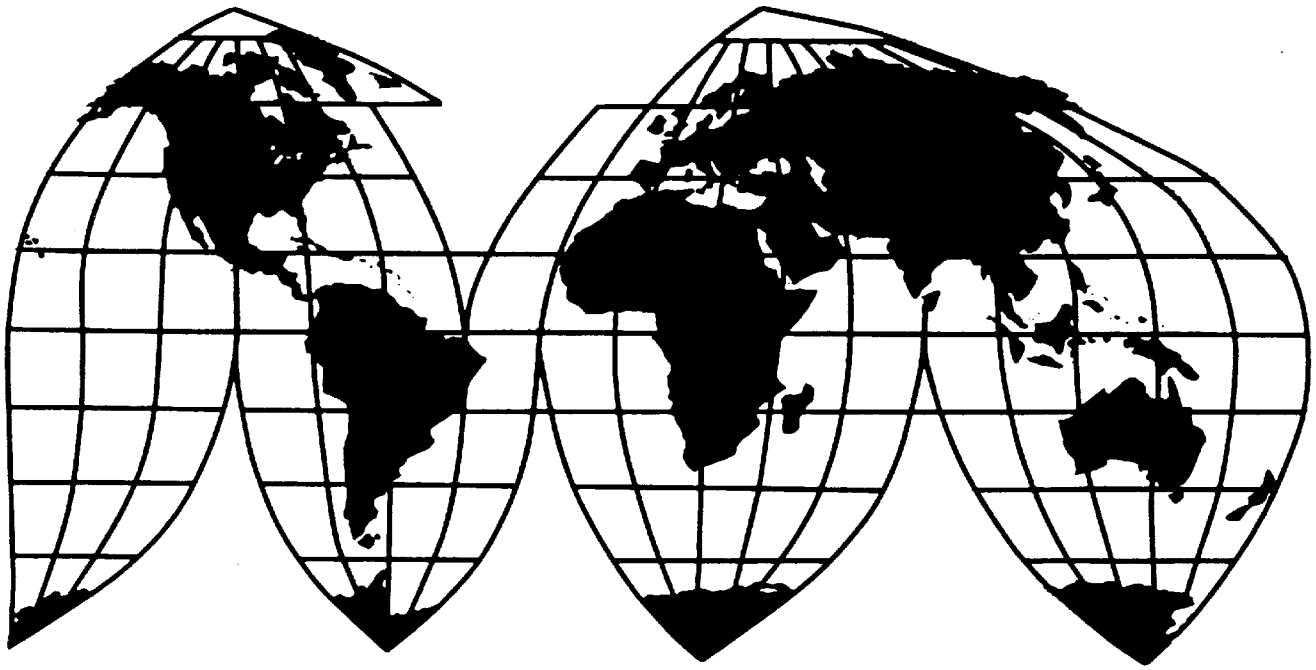

Washington, DC 20436

U.S. International Trade Commission

COMMISSIONERS

Daniel R. Pearson, Chairman
Shara L. Aranoff, Vice Chairman
Jennifer A. Hillman
Stephen Koplan
Deanna Tanner Okun
Charlotte R. Lane

Robert A. Rogowsky
Director of Operations

Staff assigned

Debra Baker, *Investigator*
Deborah McNay, *Industry Analyst*
John Benedetto, *Economist*
John Ascienzo, *Accountant*
Mark Rees, *Attorney*
David Goldfine, *Attorney*
David Fishburg, *Attorney*
Steven Hudgens, *Statistician*
Jason Pau, *Student Intern*

Diane Mazur, *Supervisory Investigator*

Address all communications to
Secretary to the Commission
United States International Trade Commission
Washington, DC 20436

U.S. International Trade Commission

Washington, DC 20436
www.usitc.gov

Certain Bearings From China, France, Germany, Italy, Japan, Singapore, and the United Kingdom

Investigation Nos. 731-TA-344, 391–A, 392–A and C, 393–A, 394–A, 396, and 399–A (Second Review)

Publication 3876

August 2006

CONTENTS

	Page
Determinations	1
Views of the Commission	3
Dissenting views of Chairman Daniel R. Pearson	59
Dissenting views of Commissioner Stephen Koplan and Commissioner Charlotte R. Lane with respect to spherical plain bearings from France	73

Introduction and General Overview

Introduction and general overview	Overview-1
Background	Overview-1
The original investigations and the first five-year reviews	Overview-2
Related investigations	Overview-5
Statutory criteria and organization of the report	Overview-6
The subject products	Overview-8
Physical characteristics and uses	Overview-8
Manufacturing process	Overview-10
U.S. market participants	Overview-12
U.S. producers	Overview-12
U.S. importers	Overview-18
U.S. purchasers	Overview-19
Foreign producers	Overview-19

Chapter One: Tapered Roller Bearings

Part I: Overview	TRB-I-1
Commerce's results of sunset reviews	TRB-I-4
Commerce's administrative reviews	TRB-I-5
Distribution of continued dumping and subsidy offset funds to affected domestic producers	TRB-I-10
The subject product	TRB-I-11
U.S. tariff treatment	TRB-I-11
Domestic like product issues	TRB-I-12
Physical characteristics and uses	TRB-I-13
Manufacturing process	TRB-I-15
Interchangeability and customer and producer perceptions	TRB-I-15
Channels of distribution	TRB-I-15
Price	TRB-I-16
U.S. market participants	TRB-I-16
U.S. producers	TRB-I-16
U.S. importers	TRB-I-20
U.S. purchasers	TRB-I-20
Apparent U.S. consumption and market shares	TRB-I-21

C O N T E N T S

Page

Chapter One: Tapered Roller Bearings--*Continued*

Part II: Conditions of competition in the U.S. market TRB-II-1
Introduction TRB-II-1
U.S. market segments TRB-II-1
Geographic market segments TRB-II-1
Supply and demand considerations TRB-II-2
U.S. supply TRB-II-2
U.S. demand TRB-II-5
Substitutability TRB-II-9
Lead times TRB-II-9
U.S. purchasers TRB-II-9
Factors affecting purchasing decisions TRB-II-11
Comparison of domestic products and imports TRB-II-15
Elasticity estimates TRB-II-17
U.S. supply elasticity TRB-II-17
U.S. demand elasticity TRB-II-18
Substitution elasticity TRB-II-18
Part III: U.S. producers' trade and financial data TRB-III-1
U.S. producers' capacity, production, and capacity utilization TRB-III-1
U.S. producers' domestic shipments, company transfers, and export shipments TRB-III-2
U.S. producers' inventories TRB-III-2
U.S. producers' imports TRB-III-3
U.S. producers' purchases TRB-III-3
U.S. producers' employment, wages, and productivity TRB-III-3
Financial experience of U.S. producers TRB-III-4
Background TRB-III-4
U.S. producers' TRB operations TRB-III-4
Capital expenditures and research and development expenses TRB-III-5
Assets and return on investment TRB-III-5
Part IV: U.S. imports and the industry in China TRB-IV-1
U.S. imports TRB-IV-1
U.S. importers' inventories TRB-IV-5
The industry in China TRB-IV-5
The global TRB market TRB-IV-11
Part V: Pricing and related information TRB-V-1
Factors affecting prices TRB-V-1
Raw material costs TRB-V-1
Transportation costs to the U.S. market TRB-V-1
U.S. inland transportation costs TRB-V-2
U.S. price levels TRB-V-2
Exchange rates TRB-V-2
Pricing practices TRB-V-2
Pricing methods TRB-V-2
Price trends TRB-V-4
Price data TRB-V-4
Price trends TRB-V-5
Price comparisons TRB-V-6

CONTENTS

Page

Chapter Two: Ball Bearings

Part I: Overview . . . BB-I-1
Commerce's results of sunset reviews . . . BB-I-6
Commerce's administrative reviews on France, Germany, Italy, Japan, Singapore, and the United Kingdom . . . BB-I-9
Distribution of continued dumping and subsidy offset funds to affected domestic producers . . BB-I-29
The subject product . . . BB-I-31
U.S. tariff treatment . . . BB-I-32
Domestic like product issues . . . BB-I-32
Physical characteristics and uses . . . BB-I-33
Manufacturing process . . . BB-I-37
Interchangeability and customer and producer perceptions . . . BB-I-38
Channels of distribution . . . BB-I-38
Price . . . BB-I-40
U.S. market participants . . . BB-I-40
U.S. producers . . . BB-I-40
U.S. importers . . . BB-I-49
U.S. purchasers . . . BB-I-49
Apparent U.S. consumption and market shares . . . BB-I-50
Part II: Conditions of competition in the U.S. market . . . BB-II-1
Introduction . . . BB-II-1
U.S. market segments . . . BB-II-1
Geographic markets . . . BB-II-2
Supply and demand considerations . . . BB-II-2
U.S. supply . . . BB-II-2
U.S. demand . . . BB-II-7
Substitutability issues . . . BB-II-11
Lead times . . . BB-II-11
U.S. purchasers . . . BB-II-11
Factors affecting purchasing decisions . . . BB-II-12
Comparisons of domestic products and subject imports . . . BB-II-21
Elasticity estimates . . . BB-II-23
U.S. supply elasticity . . . BB-II-23
U.S. demand elasticity . . . BB-II-25
Substitution elasticity . . . BB-II-25
Part III: U.S. producers' trade and financial data . . . BB-III-1
U.S. producers' capacity, production, and capacity utilization . . . BB-III-1
U.S. producers' domestic shipments, company transfers, and export shipments . . . BB-III-5
U.S. producers' inventories . . . BB-III-7
U.S. producers' imports . . . BB-III-8
U.S. producers' purchases . . . BB-III-8
U.S. producers' employment, wages, and productivity . . . BB-III-9
Financial experience of U.S. producers . . . BB-III-10
Background . . . BB-III-10
U.S. producers' BB operations . . . BB-III-10
Capital expenditures and research and development expenses . . . BB-III-13
Assets and return on investment . . . BB-III-13

C O N T E N T S

Page

Chapter Two: Ball Bearings--*Continued*

Part IV: U.S. imports and the industries in France, Germany, Italy, Japan, Singapore, and the United Kingdom . . . BB-IV-1
U.S. imports . . . BB-IV-1
U.S. importers' inventories . . . BB-IV-7
Subject countries' capacity, production, capacity utilization, domestic shipments, export shipments, and inventories . . . BB-IV-9
The industry in France . . . BB-IV-12
The industry in Germany . . . BB-IV-13
The industry in Italy . . . BB-IV-15
The industry in Japan . . . BB-IV-16
The industry in Singapore . . . BB-IV-19
The industry in the United Kingdom . . . BB-IV-20
The global BB market . . . BB-IV-22
Part V: Pricing and related information . . . BB-V-1
Factors affecting prices . . . BB-V-1
Raw material costs . . . BB-V-1
Transportation costs to the U.S. market . . . BB-V-1
U.S. inland transportation costs . . . BB-V-2
U.S. price levels . . . BB-V-2
Exchange rates . . . BB-V-2
Pricing practices . . . BB-V-2
Pricing methods . . . BB-V-2
Price trends . . . BB-V-4
Price data . . . BB-V-6
Price trends . . . BB-V-7
Price comparisons . . . BB-V-7

Chapter Three: Spherical Plain Bearings

Part I: Overview . . . SPB-I-1
Commerce's results of sunset reviews . . . SPB-I-4
Commerce's administrative reviews . . . SPB-I-4
Distribution of continued dumping and subsidy offset funds to affected domestic producers . . SPB-I-6
The subject product . . . SPB-I-6
U.S. tariff treatment . . . SPB-I-7
Domestic like product issues . . . SPB-I-7
Physical characteristics and uses . . . SPB-I-8
Manufacturing process . . . SPB-I-9
Interchangeability and customer and producer perceptions . . . SPB-I-9
Channels of distribution . . . SPB-I-10
Price . . . SPB-I-10

C O N T E N T S

Page

Chapter Three: Spherical Plain Bearings--*Continued*

Part I: Overview--Continued
U.S. market participants SPB-I-11
U.S. producers SPB-I-11
U.S. importers SPB-I-14
U.S. purchasers SPB-I-14
Apparent U.S. consumption and market shares SPB-I-15
Part II: Conditions of competition in the U.S. market SPB-II-1
Introduction SPB-II-1
U.S. market segments SPB-II-1
Geographic markets SPB-II-1
Supply and demand considerations SPB-II-1
U.S. supply SPB-II-1
U.S. demand SPB-II-5
Substitutability issues SPB-II-8
Lead times SPB-II-8
U.S. purchasers SPB-II-8
Factors affecting purchase decisions SPB-II-9
Comparisons of domestic products and subject imports SPB-II-12
Elasticity estimates SPB-II-14
U.S. supply elasticity SPB-II-14
U.S. demand elasticity SPB-II-14
Substitution elasticity SPB-II-15
Part III: U.S. producers' trade and financial data SPB-III-1
U.S. producers' capacity, production, and capacity utilization SPB-III-1
U.S. producers' domestic shipments, company transfers, and export shipments SPB-III-1
U.S. producers' inventories SPB-III-4
U.S. producers' imports and purchases SPB-III-5
U.S. producers' employment, wages, and productivity SPB-III-5
Financial experience of U.S. producers SPB-III-6
Background SPB-III-6
U.S. producers' SPB operations SPB-III-6
Capital expenditures and research and development expenses SPB-III-11
Assets and return on investment SPB-III-11
Part IV: U.S. imports and the industry in France SPB-IV-1
U.S. imports SPB-IV-1
U.S. importers' inventories SPB-IV-4
The industry in France SPB-IV-4
The global SPB market SPB-IV-5

C O N T E N T S

Page

Chapter Three: Spherical Plain Bearings--*Continued*

Part V: Pricing and related information SPB-V-1
Factors affecting prices SPB-V-1
Raw material costs SPB-V-1
Transportation costs to the U.S. market SPB-V-1
U.S. inland transportation costs SPB-V-1
U.S. price levels SPB-V-2
Exchange rates SPB-V-2
Pricing practices SPB-V-2
Pricing methods SPB-V-2
Price trends SPB-V-4
Price data SPB-V-4
Price trends SPB-V-5
Price comparisons SPB-V-5

Appendixes

A. *Federal Register* notices and adequacy statement A-1
B. Hearing witnesses B-1
C. Summary data C-1
D. Comments on the significance of the existing antidumping duty orders and the likely effects of revocation D-1
E. Scope rulings E-1
F. Exchange rate graphs F-1
G. Additional TRB pricing data G-1
H. Additional BB pricing data H-1

Note.--Information that would reveal confidential operations of individual concerns may not be published and therefore has been deleted from this report. Such deletions are indicated by asterisks.

GLOSSARY OF ABBREVIATIONS

General Terms and Organizations

ABMA . . . . . American Bearing Manufacturers Association
AIA . . . . . Aerospace Industries Association
AM . . . . . Aftermarket
BBs . . . . . Ball bearings and parts thereof
CCCME . . . . . China Chamber of Commerce for Import and Export of Machinery and Electronic Products
CIT. . . . . U.S. Court of International Trade
CNC . . . . . Computer numerical controlled
COGS . . . . . Cost of goods sold
Commerce . . . . . U.S. Department of Commerce
Commission/ITC . . . . . U.S. International Trade Commission
CRBs . . . . . Cylindrical roller bearings
CRU . . . . . Commodity Research Unit
Customs . . . . . U.S. Customs and Border Protection
DOT . . . . . U.S. Department of Transportation
FAA . . . . . Federal Aviation Administration
FR . . . . . *Federal Register*
HTS . . . . . Harmonized Tariff Schedule
ISO . . . . . International Organization of Standarization
JBIA . . . . . Japanese Bearing Industry Association
LTFV . . . . . Less than fair value
NAFTA . . . . . North American Free Trade Agreement
OEMs . . . . . Original equipment manufacturers
R&D . . . . . Research and development
SG&A . . . . . Selling, general, and administrative
SPBs . . . . . Spherical plain bearings and parts thereof
The Act . . . . . The Tariff Act of 1930
Treasury . . . . . U.S. Department of the Treasury
TRBs . . . . . Tapered roller bearings and parts thereof
UAW . . . . . International Union, United Automobile, Aerospace and Agricultural Implement Workers of America
USW . . . . . Allied Industrial and Service Workers International Union, AFL-CIO-CLC

Domestic Producers' Company Abbreviations

Alinabal . . . . . Alinabal, Inc.
American NTN/ANBM . . . . . American NTN Bearing Manufacturing Corp.
Barden . . . . . Barden Aerospace and Super Precision
Delphi . . . . . Delphi Automotive Systems LLC
Emerson . . . . . Emerson Power Transmission Corp.
Emerson . . . . . Emerson Power Transmission Drive & Components and subsidiaries (McGill, Rollway, Emerson Chain, and Emerson Power Transmission)
FAG Automotive . . . . . FAG Automotive Drive
FAG Industrial . . . . . FAG Industrial
Hoover Precision Products, Inc. . . . . Hoover Precision

INA	INA Bearings
Kilian	Kilian Manufacturing Corp.
Koyo/KCU	Koyo Corporation of U.S.A.
McGill	McGill Manufacturing Co.
Nachi Technology/NTI	Nachi Technology, Inc.
Nakanishi	Nakanishi Manufacturing Corp.
New Hampshire/NHBB	New Hampshire Ball Bearings, Inc.
NN	NN, Inc.
NSK	NSK Corp.
NSK-ASK Precision	NSK -ASK Precision Ball Co.
NTN-BCA/BCA	NTN-BCA Corp.
NTN-Bower/Bower	NTN-Bower Corp.
NTN-USA	NTN-USA Corp. and wholly-owned subsidiaries (ANBN, Bower, BCA)
Pacamor/Kubar	Pacamor/Kubar Bearings
RBC	RBC Bearings, Inc.
Rexnord	Rexnord Bearing Group
Rockwell	Rockwell Automation Power Systems
Rollway	Rollway Bearing International LTD
Saint-Gobain Ceramics & Plastics, Inc.	Saint-Gobain
Schaeffler Group	Schaeffler Group USA Corporation, and predecessors[1]
SKF	SKF USA, Inc.
Timken	The Timken Co.
Triangle	Triangle Manufacturing Co.
Trostel	Trostel Ltd.
Winsted	Winsted Precision Ball Co.

Foreign Manufacturers/Exporters' Company Abbreviations

ADH	Aerospatiale Division Helicopters
Aeroengine Bearings	Aeroengine Bearings U.K. Ltd.
AKS East Japan	AKS East Japan Co., Ltd.
AKS Precision	AKS Precision Ball Europe, U.K.
Amatsuji	Amatsuji Steel Ball Mfg. Co., Ltd.
Asahi	Asahi Seiko Co., Ltd.
Barden UK	The Barden Corp. (UK), Ltd.
Beijing Nankou SKF	Beijing Nankou SKF Railway Bearing
BOC Japan	BOC Japan Ltd.
BOC UK	BOC Ltd. (UK)
Carl Werthenbach	Carl Werthenbach Konstruktionsteile GmbH & Co. KG
Changshan Peer	Sino-America Changshan Peer Bearing Co., Ltd.
China Artex/GDARTEX	China Artex Corp. Guangdong Co.
Chitose Sangyo	Chitose Sangyo Co., Ltd.
CMC	China National Machinery Import & Export Co., Ltd.
Cryostar (a subsidiary of BOC Group, Inc.)	Cryostar
DUKE	Chongqing Duke Enterprises Co., Ltd.
Dowty/Dowty Rotol	Dowty Rotol, Ltd.
FAG Kugelfischer	FAG Kugelfischer AG & Co.

[1] Predecessors consist of Barden, FAG Automotive, FAG Industrial, INA, and Winsted.

FAG UK . . . . . FAG (UK) Ltd.
Fichtel & Sachs . . . . . Fichtel & Sachs Ag; Sachs Automotive Products Co.
Fuji Heavy Industries . . . . . Fuji Heavy Industries
Fujino Iron Works . . . . . Fujino Ironworks Co., Ltd.
Gebruder Reinfurt/GRW . . . . . Gebruder Reinfurt GmbH & Co., KG
Georg Muller/GMN . . . . . Georg Muller Nurnberg Ag; Georg Muller of America
Guizhou . . . . . China National Automotive Industry Import & Export Guizhou Automotive
Hangzhou/HJH . . . . . Hangzhou Jingzhou Bearing Co.
Harbin/HRB . . . . . Harbin Bearing Group Corp.
Heidelberg Druckmaschinen/HDM . . . . . Heidelberg Druckmaschinen AG
Heilongjiang . . . . . Heilongjiang CMEC
Honda . . . . . Honda Motor Co., Ltd.; American Honda Motor Co.; Honda of America Manufacturing; Honda Power
INA Schaeffler . . . . . INA Schaeffler KG
Inoue Jikuuke Kogyo/IJK . . . . . Inoue Jikuuke Kogyo Co., Ltd.
Izumoto/IKS . . . . . Izumoto Seiko Co., Ltd.
JTEKT (Koyo) . . . . . JTEKT Corp. Kokoku SeikoKokoku Seiko K.K
Komei . . . . . Komei K.K.
KONLON . . . . . Hefei KONLON BearingCo., Ltd.
Koyo Bearings (Europe) Ltd. . . . . Koyo Bearings
Kuribayashi Seisakusho . . . . . Kuribayashi Seisakusho K.K.
Liaoning . . . . . Liaoning Mec Group, Ltd.
Luoyang/LYC . . . . . Luoyang Bearing Corp. (Group)
MBB . . . . . Messerschmidt-Boelkow-Blohm, GmbH
Messier . . . . . Messier-Bugatti
Meter . . . . . Meter S.p.A.
Minebea . . . . . Minebea Co., Ltd.
Myonic . . . . . Myonic GmbH
Nachi America . . . . . Nachi America, Inc.
Nachi Fujikoshi . . . . . Nachi-Fujikoshi Corp.
Nachi Technology . . . . . Nachi Technology Inc.
Nakai . . . . . Nakai Bearing Co., Ltd.
Nakanishi Metal Works . . . . . Nakanishi Metal Works Co., Ltd.
Nankai Seiko . . . . . Nankai Seiko Co., Ltd.
Neuwig Fertigung/NWG . . . . . Neuwig Fertigung GmbH
Ningbo Tiansheng/TSB . . . . . Ningbo Tiansheng Bearing Co., Ltd.
Nippon Pillow Block . . . . . Nippon Pillow Block Manufacturing Co., Ltd.
Nippon Thompson . . . . . Nippon Thompson Co., Ltd.
NMB/Pelmec . . . . . NMB Singapore, Ltd.; Pelmec Industries (Pte.), Ltd.
Nomura Tekkosho . . . . . Nomura Tekkosho K.K.
NMB-Minebea UK . . . . . NMB-Minebea UK Ltd.
NPBS . . . . . Nippon Pillow Block Sales Co., Ltd.; Nippon Pillow Block Sales Co., Ltd.
NSK-AKS Precision . . . . . NSK-AKS Precision Ball Co.
NSK Japan . . . . . NSK Ltd.
NSK Europe . . . . . NSK Bearings Europe Ltd.
NSK Fukushima . . . . . NSK Fukushima Co., Ltd.
NSK Micro Precision . . . . . NSK Micro Precision Co., Ltd.
NSK Precision . . . . . NSK Precision Co., Ltd.
NTN . . . . . NTN Corp.
NTN-Germany . . . . . NTN Kugellagerfabrik (Deutschland) GmbH

Osaka Pump . . . . . Osaka Pump Co., Ltd.
Paul Mueller/GMN . . . . . Paul Mueller GmbH & Co. KG
Premier . . . . . Premier Bearing and Equipment
RHP . . . . . Ransome Hoffman Pollard
Rolls Royce . . . . . Rolls Royce PLC/Rolls Royce International, Ltd.
Rose . . . . . Rose Bearings Ltd.
Sapporo . . . . . Sapporo Precision, Inc.
Schaeffler Germany . . . . . Schaeffler KG
SFSECC . . . . . Shanghai Foreign Service & Economic Cooperation Co., Ltd.
Shanghai SBC . . . . . Shanghai Bearing Import & Export Co., Ltd.
Shanghai SKF . . . . . Shanghai SKF Automobile Bearing
Shanghai General Bearing . . . . . Shanghai General Bearing Co.
Shanghai United/SUBC . . . . . Shanghai United Bearing Co., Ltd.
Shanghai Weiya/SHWAIYA . . . . . Shanghai Weiya Industry Co., Ltd.
Shinwa Seiko . . . . . Shinwa Seiko Co., Ltd.
Showa . . . . . Showa Pillow Block Manufacturing Co.
SKF . . . . . AB SKF
SKF Aeroengine UK . . . . . SKF Aeroengine UK
SKF Aerospace France . . . . . SKF Aerospace France
SKF France . . . . . SKF France S.A.
SKF Germany . . . . . SKF GmbH
SKF Italy . . . . . SKF Industrie S.p.A.
SKF UK . . . . . SKF (U.K) Ltd.
SNFA . . . . . S.N.F.A. Bearing, Ltd./SNFA France
SNECMA . . . . . Snecma Groupe SAFRAN
SNR . . . . . Societe Nouvelle de Roulements (SNR Roulements)
Somecat . . . . . Somecat S.p.A.
SUMEDA . . . . . SUMEC Hardware & Tools Co., Ltd.
Takeshita . . . . . Takeshita Seiko Co. Ltd.
THK . . . . . THK Co. Ltd.
Tianshui Hailin/THLH . . . . . Tianshui Hailin Import and Export Corp.
Timken France . . . . . Timken France SAS
Timken Germany . . . . . Timken GmbH
Timken-NSK . . . . . Timken-NSK Bearing (Suzhou) Co., Ltd.
Timken Super Precision . . . . . Timken Super Precision Singapore, Ltd.
Timken UK . . . . . Timken UK Ltd.
Torrington . . . . . The Torrington Co.
Tottori/KYK . . . . . Tottori Yamakai Bearing Seisakusho, Ltd.
Turbomeca S.A. . . . . Turbomeca
Wafangdian/ZWZ . . . . . Wafangdian Bearing Company Ltd.
Wanxiang . . . . . Zheijiang Wanxiang Group
Weihai . . . . . Weihai Machinery Holding Group
Wuhan Kejia/WHKJ . . . . . Wuhan Kejia Machinery and Electrical Import & Export Co., Ltd.
Wuxi Beitong/BTB . . . . . Wuxi Beitong Machinery & Equipment Co., Ltd.
Xiangfan . . . . . Xiangfan Machinery Import & Export Corp.
Xiangyang/ZXY . . . . . Xiangyiang Automobile Bearing Co., Ltd.
Xibei/NXZ . . . . . Xibei Bearing Group Import & Export Co., Ltd.
Yagi Kogyo . . . . . Yagi Kogyo K.K.
Yantai CMC . . . . . Yantai CMC Bearing Co. Ltd.
Yantai Timken . . . . . Yantai Timken Co., Ltd.

Zheijiang Machinery . . . . . Zheijiang Machinery Import & Export Corp.
Zheijiang/ZCCBC . . . . . Zheijiang Changshan Changhe Bearing Co., Ltd.
ZF . . . . . Zahnradfabrik Friedrichshafen AG

UNITED STATES INTERNATIONAL TRADE COMMISSION

Investigation Nos. 731-TA-344, 391-A, 392-A and C, 393-A, 394-A, 396, and 399-A (Second Review)

CERTAIN BEARINGS FROM CHINA, FRANCE, GERMANY, ITALY, JAPAN, SINGAPORE, AND THE UNITED KINGDOM

DETERMINATIONS

On the basis of the record[1] developed in the subject five-year reviews, the United States International Trade Commission (Commission) determines,[2] pursuant to section 751(c) of the Tariff Act of 1930 (19 U.S.C. § 1675(c)) (the Act), that revocation of the antidumping duty orders on the following types of bearings from China, France, Germany, Japan, and the United Kingdom would be likely to lead to continuation or recurrence of material injury to an industry in the United States within a reasonably foreseeable time.

Product	Country	Investigation No.
Tapered roller bearings	China[3]	731-TA-344
Ball bearings	France	731-TA-392-A
Ball bearings	Germany	731-TA-391-A
Ball bearings	Italy	731-TA-393-A
Ball bearings	Japan	731-TA-394-A
Ball bearings	United Kingdom	731-TA-399-A

The Commission also determines that revocation of the antidumping duty orders on the following types of bearings from France and Singapore would not be likely to lead to continuation or recurrence of material injury to an industry in the United States within a reasonably foreseeable time.

Product	Country	Investigation No.
Ball bearings	Singapore[4]	731-TA-396
Spherical plain bearings	France[5]	731-TA-392-C

BACKGROUND

The Commission instituted these reviews on June 1, 2005 (70 F.R. 31531) and determined on September 7, 2005 that it would conduct full reviews (70 F.R. 54568, September 15, 2005). Notice of the scheduling of the Commission's reviews and of a public hearing to be held in connection therewith was given by posting copies of the notice in the Office of the Secretary, U.S. International Trade Commission, Washington, DC, and by publishing the notice in the *Federal Register* on October 18, 2005 (70 F.R.

---

[1] The record is defined in sec. 207.2(f) of the Commission's Rules of Practice and Procedure (19 CFR § 207.2(f)).

[2] Commissioner Deanna Tanner Okun not participating.

[3] Chairman Daniel R. Pearson dissenting.

[4] Commissioner Charlotte R. Lane dissenting.

[5] Commissioners Stephen Koplan and Charlotte R. Lane dissenting.

60556).[6] The hearing was held in Washington, DC, on May 2, 2006, and all persons who requested the opportunity were permitted to appear in person or by counsel.

[6] The schedule of the Commission's reviews and of the public hearing was revised on December 9, 2005 (70 F.R. 75482, December 20, 2005) and on May 4, 2006 (71 F.R. 27513, May 11, 2006).

VIEWS OF THE COMMISSION[1]

Based on the record in these five-year reviews, we determine under section 751(c) of the Tariff Act of 1930, as amended (the Act), that revocation of the antidumping duty orders on tapered roller bearings ("TRBs") from China, and on ball bearings ("BBs") from France, Germany, Italy, Japan, and the United Kingdom, would be likely to lead to continuation or recurrence of material injury to an industry in the United States within a reasonably foreseeable time.[2] We further determine that revocation of the antidumping duty orders on BBs from Singapore and on spherical plain bearings ("SPBs") from France would not be likely to lead to continuation or recurrence of material injury to an industry in the United States within a reasonably foreseeable time.[3] [4]

I. BACKGROUND

A. Original Investigations

In June 1987, the Commission determined that an industry in the United States was being materially injured by reason of imports of TRBs and parts thereof from China, Hungary, and Romania that were found by the Department of Commerce ("Commerce") to be sold in the United States at less

[1] Commissioner Okun did not participate in these reviews.

[2] Chairman Pearson dissenting with respect to TRBs from China. See Dissenting Views of Chairman Daniel R. Pearson.

[3] Commissioner Lane does not join in this determination with regard to Singapore.

[4] Commissioner Stephen Koplan and Commissioner Charlotte R. Lane dissent with respect to SPBs from France. See Dissenting Views of Commissioners Stephen Koplan and Charlotte R. Lane with respect to Spherical Plain Bearings from France.

than fair value ("LTFV").[5] Commerce published antidumping duty orders with respect to China on June 15, 1987, and antidumping duty orders with respect to Hungary and Romania on June 19, 1987.[6]

In May 1989, the Commission determined that an industry in the United States was being materially injured by reason of LTFV imports of BBs from France, Germany, Italy, Japan, Romania, Singapore, Sweden, and the United Kingdom, and that a domestic industry was being materially injured by reason of LTFV imports of SPBs from France, Germany, and Japan.[7] Commerce published the antidumping duty orders on these bearings on May 15, 1989.[8]

The Court of International Trade ("CIT") affirmed the Commission's affirmative material injury determinations as to SPBs and BBs, including the Commission's finding of six domestic like products (Commerce's scope had identified five classes or kinds of subject merchandise).[9] A separate appeal challenged the Commission's decision to cumulate subject imports of TRBs. That litigation resulted in the affirmance of the Commission's decision to cumulate.[10]

In another appeal, the CIT affirmed the Commission's material injury determination with respect to SPBs from Japan.[11] The CIT also affirmed the Commission's preliminary determination of no material

---

[5] Tapered Roller Bearings and Parts Thereof, and Certain Housings Incorporating Tapered Rollers From Hungary, The People's Republic of China, and Romania, Invs. Nos. 731-TA-341, 344, 345 (Final), USITC Pub. 1983 (June 1987) (TRB "original investigations").

In related investigations, the Commission determined, in January 1975, that an industry in the United States was likely to be injured by reason of imports of TRBs, including inner race or cone assemblies and outer races or cups, exported to and sold in the United States, either as a unit or separately, from Japan, that were or were likely to be sold at LTFV within the meaning of the Antidumping Act of 1921 (as amended). Tapered Roller Bearings and Certain Components Thereof From Japan, Inv. No. AA1921-143, USITC Pub. 714 at 2 (Jan. 1975). The Treasury Department ("Treasury") published a dumping finding with respect to TRBs and certain components thereof from Japan on August 18, 1976, 41 Fed. Reg. 34975 (Aug. 18, 1976), and on August 10, 1981, Commerce clarified that Treasury's finding was limited to TRBs four inches or less in outside diameter and components thereof, excluding unfinished components. 46 Fed. Reg. 40550 (Aug. 10, 1981). On June 15, 1982, Commerce revoked its antidumping finding on TRBs four inches or less in outside diameter from Japan that were produced and sold by NTN Toyo Bearing Co., Ltd. ("NTN") and NTN Bearing Corp. of America ("NBCA"). 47 Fed. Reg. 25757 (June 15, 1982).

In September 1987, the Commission determined, pursuant to a petition that covered TRB imports from Japan not subject to the 1976 finding (i.e., TRBs over four inches in outside diameter and parts thereof, and all TRBs produced and sold by NTN), that an industry in the United States was being materially injured by reason of imports of LTFV TRBs and parts thereof from Japan. Tapered Roller Bearings and Parts Thereof, and Certain Housings Incorporating Tapered Rollers From Japan, Inv. No. 731-TA-343 (Final), USITC Pub. 2020 (Sept. 1987). Commerce published an antidumping duty order on Japan on October 6, 1987. 52 Fed. Reg. 37352 (Oct. 6, 1987).

[6] 52 Fed. Reg. 22667 (June 15, 1987); 52 Fed. Reg. 23319-23320 (June 19, 1987).

[7] Antifriction Bearings (Other than Tapered Roller Bearings) and Parts Thereof from the Federal Republic of Germany, France, Italy, Japan, Romania, Singapore, Sweden, Thailand, and the United Kingdom, Invs. Nos. 303-TA-19 and 20 (Final) and 731-TA-391 through 399 (Final), USITC Pub. 2185 (May 1989) (BB and SPB "original investigations").

[8] 54 Fed. Reg. 20900-20911 (May 15, 1989).

[9] The Torrington Co. v. United States, 747 F. Supp. 744 (Ct. Int'l Trade 1990), aff'd 938 F.2d 1278 (Fed. Cir. 1991). The Court also upheld the affirmative determinations with respect to cylindrical roller bearings ("CRBs"), but CRBs are not at issue in these reviews because the Commission made negative determinations as to CRBs in the first five-year reviews, as noted below.

[10] Marsuda-Rodgers Int'l v. United States, 923 F.2d 871 (Fed. Cir. 1990).

[11] Minebea Co., Ltd. and NMB Corp. v. United States, 794 F. Supp. 1161 (Ct. Int'l Trade 1992).

injury by reason of imports of BBs from several countries and upheld the Commission's determination not to exclude related parties from the domestic industry.[12]

B. First Five-Year Reviews

In the first sunset reviews, the Commission made an affirmative determination with respect to one of the five antidumping duty orders on TRBs (China) and negative determinations with respect to the remaining TRB orders (Hungary, two on Japan, and Romania).[13]

The Commission made affirmative determinations with respect to the orders on BBs from France, Germany, Italy, Japan, Singapore, and the United Kingdom.[14] The Commission made negative determinations with respect to the orders on BBs from Romania and Sweden, which the Commission did not cumulate based on the finding that imports from neither country would be likely to have a discernible adverse impact on the domestic industry if the respective orders were revoked.[15]

Finally, the Commission made an affirmative determination with respect to one of the three orders on SPBs (France), and negative determinations respecting the remaining two orders (Germany and Japan).[16] The Commission also made negative determinations with respect to the orders on CRBs from all subject countries (France, Germany, Italy, Japan, Sweden, and the United Kingdom).[17]

Commerce ordered the continuation of the antidumping duty orders as to which the Commission made affirmative determinations in July 2000.[18]

There were several appeals of the Commission's first review determinations. With respect to the Commission's affirmative review determinations as to BBs from France, Germany, Italy, Japan, Singapore, and the United Kingdom, the CIT remanded those determinations to the Commission with instructions to: (1) explain the extent to which anti-friction bearings other than BBs were "commodity-like"; (2) apply the Court's finding as to the meaning of the term "likely" in both its cumulation analysis and its final determination on the merits; and (3) address a possible error in respect to whether a U.S. producer imported BBs from Singapore.[19] The CIT also found that it could not reach issues pertaining to cumulation until after the Commission applied the term "likely" as interpreted by the Court. The Commission was affirmed by the CIT on all issues following remand determinations by the Commission on these issues.[20]

In the appeal of the Commission's negative review determinations as to the orders on TRBs from Japan, the CIT sustained various findings by the Commission, but remanded for further explanation the likely impact of subject TRBs from Japan on the entire domestic industry, the reliability of capacity figures reported by Japanese TRB producers, and how the Commission's findings were made in the

---

[12] The Torrington Co. v. United States, 790 F. Supp. 1161 (Ct. Int'l Trade 1992), aff'd, 991 F.2d 809 (Fed. Cir. 1993).

[13] Certain Bearings from China, France, Germany, Hungary, Italy, Japan, Romania, Singapore, Sweden, and the United Kingdom, Inv. Nos. AA1921-143, 731-TA-341, 343-345, 391-397, and 399 (Review), USITC Pub. 3309 (June 2000) ("Certain Bearings Review Determinations") at 1-2.

[14] Certain Bearings Review Determinations at 1.

[15] Certain Bearings Review Determinations at 2, 33-34.

[16] Certain Bearings Review Determinations at 1-2.

[17] Certain Bearings Review Determinations at 2.

[18] 65 Fed. Reg. 42665 (July 11, 2000).

[19] NMB Singapore Ltd. v. United States, 288 F.Supp.2d 1306 (Ct. Int'l Trade 2003).

[20] NMB Singapore Ltd. v. United States, 341 F.Supp.2d 1327 (Ct. Int'l Trade 2004), aff'd, 140 Fed. Appx. 268 (Fed. Cir. 2005).

context of the TRB business cycle.[21] The explanation on remand was found to be reasonable, and the determinations were affirmed.[22] With the resulting revocation of the orders on TRBs from Japan, the only TRBs at issue in the present five-year reviews are those from certain producers in China.[23]

C. Second Five-Year Reviews

The Commission instituted these reviews on June 1, 2005, and determined to conduct full reviews pursuant to section 751(c)(5) of the Act on September 7, 2005 based on the adequacy of domestic and respondent interested party group responses to the notice of institution.[24] (A copy of the Commission's explanation of adequacy determinations appears in Appendix A to the staff report).[25]

Commerce expedited certain reviews of the orders on France (BBs and SPBs), Germany, Italy, and the United Kingdom (BBs), and China (TRBs), and issued final, affirmative expedited results in October 2005.[26] Commerce issued final affirmative results for the full sunset reviews for the remaining orders, Japan and Singapore (BBs), in May 2006.[27]

Numerous parties participated in these reviews. Domestic interested parties included Pacamor Kubar Bearings ("PKB"), The Timken Co. ("Timken"), the International Union, United Automobile, Aerospace and Agricultural Implement Workers of America ("UAW"), and the United Steel, Paper and Forestry, Rubber, Manufacturing, Energy, Allied Industrial Service Workers International Union, AFL-CIO-CLC ("USW") (collectively "domestic interested parties"). Chinese parties included the China Chamber of Commerce for Import and Export of Machinery and Electronic Products and participating member companies (collectively "CCCME" or "Chinese Respondents"). Parties from Japan or related to Japanese companies included the Japan Bearing Industrial Association, JTEKT Corp. ("JTEKT"), Koyo Corp. of U.S.A. ("Koyo Corp."), Nachi-Fujikoshi Corp. ("Nachi-Fujikoshi"), Nachi America, Inc. ("Nachi America"), Nachi Technology, Inc. ("Nachi Technology"), NSK Ltd., NSK Corp., NTN Corp., NTN Bearings Corp. of America ("NTN Bearings"), American NTN Bearing Manufacturing Corp. ("American NTN Bearing"), NTN-BCA Corp., NTN Bower Corp., and NTN Driveshaft, Inc. (collectively, "Japanese Respondents"). Parties from Singapore or related to companies in Singapore included NMB Singapore, Ltd., Pelmec Industries (Pte.) Ltd. ("NMB/Pelmec"), NMB Technologies

---

[21] Timken Co. v. United States, 264 F.Supp.2d 1264, 1285 (Ct. Int'l Trade 2003).

[22] Timken Co. v. United States, 321 F.Supp.2d 1361, 1373 (Ct. Int'l Trade 2004), aff'd, 122 Fed. Appx. 510 (Fed. Cir. 2005).

[23] Also appealed were the Commission's negative review determinations as to CRBs from France, Germany, Italy, Japan, and the United Kingdom. The CIT remanded for further explanation of the likely impact of CRBs on the entire domestic industry, whether any improvement in the state of the domestic industry was related to the antidumping duty orders, and to further explain the Commission's findings in the context of the business cycle for CRBs. Timken U.S. Corp. v. United States, 310 F.Supp.2d 1327, 1346 (Ct. Int'l Trade 2004). The CRB determinations were affirmed following the remand. Timken U.S. Corp. v. United States, 2004 WL 1781348 (CIT) (Aug. 8, 2004), aff'd, 421 F.3d 1350 (Fed. Cir. 2005). Because the CRB orders were revoked, the present reviews do not involve CRBs from any country.

[24] 70 Fed. Reg. 31531 (June 1, 2005) (notice of institution); 70 Fed. Reg. 54568 (Sept. 15, 2006) (notice of decision to conduct full reviews) (Vice Chairman Okun (recusal) and Commissioner Aranoff not participating.)

[25] We cite to the confidential staff report as "CR" and the public version as "PR."

[26] 70 Fed. Reg. 58183 (Oct. 5, 2006) (France, Germany, Italy, and the United Kingdom); 70 Fed. Reg. 58383 (Oct. 6, 2005) (China). Commerce issued a correction to the scope language for all TRB proceedings on July 21, 2006. EDIS document no. 259038 (letter from Wendy J. Frankel, Director, Office 8, International Trade Administration, Commerce, to Robert Carpenter, Director, Office of Investigations, USITC) (correction letter of July 21, 2006).

[27] 71 Fed. Reg. 26325 (May 4, 2006); 71 Fed. Reg. 30378 (May 26, 2006) (amending certain final results).

Corp. ("NMB Technologies"), and New Hampshire Ball Bearings, Inc. ("NHBB") (collectively, "Singapore Respondents"). Parties from Europe or related to companies in Europe included SKF USA Inc. ("SKF USA"), SKF GmbH, SKF France S.A., SKF Aerospace France ("SKF Aerospace"), SKF Industrie S.p.A. ("SKF Industrie"), and SKF Aeroengine Bearings UK (collectively, "SKF"), NSK Europe Ltd., and the Schaeffler Group ("Schaeffler").

II. DOMESTIC LIKE PRODUCTS AND INDUSTRIES

A. Domestic Like Products

In making its determination under section 751(c), the Commission defines the "domestic like product" and the "industry."[28] The Act defines the "domestic like product" as "a product which is like, or in the absence of like, most similar in characteristics and uses with, the article subject to an investigation under this subtitle."[29]

1. Scope of Subject Merchandise and Domestic Like Product Definitions from First Reviews

TRBs. Commerce has defined the scope of this review as:

tapered roller bearings and parts thereof, finished and unfinished, . . . ; flange, take up cartridge, and hanger units incorporating tapered roller bearings; tapered roller housings (except pillow blocks) incorporating tapered rollers, with or without spindles, whether or not for automotive use.[30]

BBs. Commerce has defined the scope of these reviews as:

ball bearings and parts thereof . . . includ[ing] all bearings that employ balls as the rolling element. Imports of these products are classified under the . . . categories . . . antifriction balls, ball bearings with integral shafts, ball bearings (including radial ball bearings) and parts thereof, and housed or mounted ball bearing units and parts thereof.[31]

SPBs. Commerce has defined the scope of this review as:

spherical plain bearings . . . that employ a spherically shaped sliding element and include spherical plain rod ends.[32]

---

[28] 19 U.S.C. § 1677(4)(A).

[29] 19 U.S.C. § 1677(10). See Nippon Steel Corp. v. United States, 19 CIT 450, 455 (1995); Timken Co. v. United States, 913 F. Supp. 580, 584 (Ct. Int'l Trade 1996); Torrington Co. v. United States, 747 F. Supp. 744, 748-49 (Ct. Int'l Trade 1990), aff'd, 938 F.2d 1278 (Fed. Cir. 1991). See also S. Rep. No. 249, 96th Cong., 1st Sess. 90-91 (1979).

[30] 70 Fed. Reg. 58383 (Oct. 6, 2005), as revised by correction letter of July 21, 2006. EDIS document no. 259038.

[31] 70 Fed. Reg. 58183, 58184 (Oct. 5, 2005).

[32] 70 Fed. Reg. 58183, 58184 (Oct. 5, 2005).

Commerce further noted that:

> *The size or precision grade of a bearing does not influence whether the bearing is covered by one of the orders. These orders cover all the subject bearings and parts thereof (inner race, outer race, cage, rollers, balls, seals, shields, etc.) outlined above with certain limitations. With regard to finished parts, all such parts are included in the scope of these orders. For unfinished parts, such parts are included if (1) they have been heat-treated, or (2) heat treatment is not required to be performed on the part. Thus, the only unfinished parts that are not covered by these orders are those that will be subject to heat treatment after importation. The ultimate application of a bearing also does not influence whether the bearing is covered by the orders. Bearings designed for highly specialized applications are not excluded. Any of the subject bearings, regardless of whether they may ultimately be utilized in aircraft, automobiles, or other equipment, are within the scope of these orders.*[33]

The scope of these reviews is essentially the same as the subject scope for TRBs, BBs, and SPBs in the first reviews.[34] In its first five-year review determinations, the Commission found that TRBs, BBs, and SPBs were separate domestic like products coextensive with Commerce's scope for each type of bearing.[35]

2. Analysis

No party to these reviews takes issue with the Commission's domestic like product definitions for TRBs, BBs, or SPBs from the first five-year reviews, and a number have expressed their concurrence in those definitions.[36] We do not find that the record contains any new information that would warrant a change in the Commission's definitions of the three domestic like products, TRBs, BBs, and SPBs, that the Commission adopted in the first reviews.

Accordingly, we continue to define TRBs, BBs, and SPBs as separate domestic like products, coextensive with Commerce's scope definitions for each type of bearing.

---

[33] Id.

[34] See Certain Bearings Review Determinations at 6-8 (identifying scope of merchandise and scope histories); see also CR at BB-I-34 n.15, PR at BB-I-31 n.15 (discussing Commerce's continuing exclusion of finished but unground ball bearings from the scope of the BB orders although the recited language in the final determinations of these reviews does not track verbatim the previous iteration).

[35] Certain Bearings Review Determinations at 12-13.

[36] Domestic interested parties indicated in their responses to the Commission's notice of institution and their prehearing briefs that they agreed with the Commission's domestic like product definitions from the first reviews. CR at TRB-I-14, BB-I-37, SPB-I-9-I-10, PR at TRB-I-12, BB-I-33, SPB-I-7-I-8. No respondent interested party objected to these definitions in its response to the notice of institution or in other written submissions. See CR at TRB-I-14, BB-I-37, SPB-I-9-I-10, PR at TRB-I-12, BB-I-33, SPB-I-7-I-8. Several respondent interested parties also indicated in their responses to the Commission's notice of institution or in their prehearing briefs that they agreed with the Commission's domestic like product definitions from the first reviews.

B. Domestic Industries

Section 771(4)(A) of the Act defines the relevant domestic industry as the "producers as a whole of a domestic like product, or those producers whose collective output of a domestic like product constitutes a major proportion of the total domestic production of the product."[37]

1. Definitions

In the first five-year reviews, the Commission defined the domestic industries as all of the domestic producers of TRBs, BBs, and SPBs, respectively.[38] No party responding to the notice of institution in these reviews objected to the Commission's domestic industry definitions from the first five-year reviews. In fact, the domestic interested parties and a number of respondent interested parties expressly concurred in those definitions.[39] Based on our domestic like product definitions in these reviews, we continue to define the corresponding domestic industries as all producers of each of the three domestic like products: TRBs, BBs, and SPBs.

2. Related Parties

In the original investigations, the Commission did not exclude any related parties under 19 U.S.C. § 1677(4)(B),[40] given that they either accounted for relatively small percentages of total U.S. bearings shipments by value or their performance indicators were consistent with those of the industry as a whole.[41] The Commission thus found that the inclusion of data from the related producers within the domestic industry would not significantly distort the economic data or fail to provide an accurate picture of the domestic industry as a whole.[42]

In the first five-year reviews, four domestic producers of TRBs were related parties due to ownership or affiliation with subject country producers/exporters of the subject merchandise, or imported subject merchandise during the period of review.[43] Several domestic producers of BBs were also related parties due to ownership or affiliation with subject country producers/exporters of subject merchandise, or

---

[37] 19 U.S.C. § 1677(4)(A). In defining the domestic industry, the Commission's general practice has been to include in the industry producers of all domestic production of the like product, whether toll-produced, captively consumed, or sold in the domestic merchant market, provided that adequate production-related activity is conducted in the United States. See United States Steel Group v. United States, 873 F. Supp. 673, 682-83 (Ct. Int'l Trade 1994), aff'd, 96 F.3d 1352 (Fed. Cir. 1996).

[38] Certain Bearings Review Determinations at 13.

[39] CR at TRB-I-14, BB-I-37, SPB-I-9-I-10; PR at TRB-I-12, BB-I-33, SPB-I-7-I-8.

[40] That provision allows the Commission to exclude from the domestic industry, if appropriate circumstances exist, any producers that are related to an exporter or importer of subject merchandise or that are themselves importers. 19 U.S.C. § 1677(4)(B).

[41] USITC Pub. 1983 at 9.

[42] See Certain Bearings Review Determinations at 14, citing USITC Pub. 1983 at 9 n.24, USITC Pub. 2020 at 8, USITC Pub. 2185 at 44. See also Torrington Co. v. United States, 790 F. Supp. at 1168 (rejecting challenge to related parties determinations in certain BB investigations; the CIT noted that related parties had rationalized their production to meet the particular needs of each country's market and imported to complement their U.S. production, not to benefit from unfair trade practices; the CIT also found reasonable the Commission's conclusion that excluding related parties that account for significant shares of the domestic industry could present a distorted view of the industry).

[43] Certain Bearings Review Determinations at 13-14.

because they imported subject merchandise during the period of review.[44] Two domestic producers of SPBs were related parties due to ownership or affiliation with subject country producers/exporters of subject merchandise. One domestic producer of SPBs also imported subject merchandise during the period of review.[45]

This continued a trend from the original investigations, in which various related party relationships existed for the different U.S. industries. The Commission found in the first reviews that appropriate circumstances did not exist to exclude any related parties. The Commission noted that the market for bearings is global in nature and dominated by multinational companies that operate production facilities in various countries, including the United States. Production in each country is rationalized to some extent to meet the needs of that country's market, and importation into the United States takes place when it is inefficient to produce each and every type of bearing sold.[46] The Commission found that related parties have a longstanding presence as U.S. producers, and that the primary interest of those accounting for the largest proportion of U.S. production of each product lies in domestic production, not imports. The Commission found, moreover, that the related parties collectively accounted for a substantial proportion of U.S. sales in each of the industries and included some of the largest producers of each type of product in the United States. Given the industry-wide production patterns and the nature of related parties' U.S. production operations, the Commission determined not to exclude any related parties from the subject industries.[47]

As in the first reviews, no party advocates excluding a domestic producer as a related party. Domestic interested parties, the only parties to address the issue specifically in these reviews, argue that the related party interests in each of the industries continue today, and that there is no basis for the Commission to reach a conclusion different from that reached in the first reviews.[48]

We find nothing in the record that warrants a departure from our finding in the first reviews that no appropriate basis exists to exclude any of the domestic producers from the industries producing TRBs, BBs, or SPBs, as a related party.

TRBs. There do not appear to be any instances of direct ownership of a domestic producer of TRBs by a subject country producer/exporter.[49] In a departure from the first reviews, TRB domestic producer Koyo Corp. has an affiliated foreign producer in China, Koyo Automotive Parts (Wuxi) Co., Ltd.[50] However, there is no evidence of control that would qualify Koyo as a related party under the Act. Moreover, only one firm, ***, reported imports of subject imports during the period of review, and such imports were in smaller quantities and represented a significantly smaller percentage of the firm's U.S. production than was the case for each of the three firms that imported subject imports during the review period of the first reviews.[51]

---

[44] The CIT later found that the Commission erred in finding that *** had imported subject merchandise from Singapore. NMB Singapore Ltd. V. United States, 288 F.Supp.2d 1306, 1352 (Ct. Int'l Trade 2003). On remand, the Commission noted that this error did not alter its conclusion not to exclude *** as a related party. Remand Views at 4.

[45] Certain Bearings Review Determinations at 13-14.

[46] Certain Bearings Review Determinations at 15.

[47] Certain Bearings Review Determinations at 15-16.

[48] Domestic Interested Parties' Prehearing Brief Exh. 2 at 2-3.

[49] CR/PR at Overview Table 2; USITC Pub. 3309 at Overview Table 2.

[50] CR/PR at Table TRB-I-7.

[51] CR at TRB-III-5 & Table TRB-III-5, PR at TRB-III-2 & Table TRB-III-5; Confidential Staff Report of First Five-Year Reviews at Table TRB-III-4.

BBs. Nachi Technology, which was not identified as a related party in the first five-year reviews, is owned by Nachi America, with its ultimate corporate parent identified as Nachi-Fujikoshi of Japan.[52] Nachi America *** during the period of review.[53] In another departure from the first reviews, Koyo Corp., whose corporate parent is JTEKT of Japan, ***.[54] However, Koyo and Nachi Technology accounted for *** percent of reported U.S. shipments by value in 2005, with Koyo accounting for *** percent and Nachi Technology *** percent.[55] Koyo and Nachi Technology have clear interests in domestic production,[56] and it is not apparent that these firms' domestic production directly benefitted from their foreign corporate ties or the importation of subject merchandise.[57]

SPBs. There do not appear to be any instances of direct ownership of a domestic producer of SPBs by a subject country producer/exporter.[58] SPB domestic producers with affiliations with a subject country producer/exporter appear to be limited to SKF, which has an affiliated producer in France, SKF Aerospace.[59] However, there is no evidence of control that would qualify the two firms as related parties under the Act. Moreover, unlike in the first five-year reviews, *** during the period of review.[60]

Based on the available information, and the lack of any contention of the parties to the contrary, we find that appropriate circumstances do not exist to warrant the exclusion of any firm from any of the domestic industries as a related party.

III. LIKELIHOOD OF CONTINUATION OR RECURRENCE OF MATERIAL INJURY IF THE ANTIDUMPING DUTY ORDERS ARE REVOKED

A. Legal Standard in a Five-Year Review

In a five-year review conducted under section 751(c) of the Act, Commerce will revoke an antidumping or countervailing duty order unless: (1) it makes a determination that dumping or subsidization is likely to continue or recur, and (2) the Commission makes a determination that revocation of the antidumping or countervailing duty order "would be likely to lead to continuation or recurrence of material injury within a reasonably foreseeable time."[61] The SAA states that "under the likelihood standard, the Commission will engage in a counter-factual analysis; it must decide the likely impact in the reasonably foreseeable future of an important change in the status quo – the revocation or termination of a

---

[52] CR/PR at Table BB-I-12; cf. USITC Pub. 3309 at Table BB-I-11 (not identifying any foreign ownership or affiliation for Nachi).

[53] Memorandum INV-DD-110 (July 21, 2006) ("INV-DD-110") and CR/PR at Table BB-III-5A. ***). INV-DD-110 at Table BB-III-5A n.3. We note that production figures are maintained and reported by firms on a quantity basis, hence the ratios identified in the staff report are based on quantities.

[54] INV-DD-110 and CR/PR at Table BB-III-5A (***). ***. INV-DD-110 and CR/PR at BB-III-5A.

[55] CR/PR at Table BB-I-12.

[56] *** made *** capital investments in its domestic production operations during the period of review, and its research and development ("R&D") expenses *** in terms of U.S. production. In 2005, for example, *** capital expenditures were $***, while its R&D expenses ranked *** among domestic producers. *** investments were ***, but not unusual for U.S. producers with similar *** shares of U.S. production. CR/PR at Table BB-III-10.

[57] We note that the operating margins of ***. CR/PR at Table BB-III-9.

[58] CR/PR at Overview Table 2; USITC Pub. 3309 at Overview Table 2.

[59] CR/PR at Table SPB-I-6.

[60] CR at SPB-III-6, PR at SPB-III-5.

[61] 19 U.S.C. § 1675a(a).

proceeding and the elimination of its restraining effects on volumes and prices of imports."[62] Thus, the likelihood standard is prospective in nature.[63] The U.S. Court of International Trade has found that "likely," as used in the sunset review provisions of the Act, means "probable," and the Commission applies that standard in five-year reviews.[64] [65]

The statute states that "the Commission shall consider that the effects of revocation or termination may not be imminent, but may manifest themselves only over a longer period of time."[66] According to the SAA, a "'reasonably foreseeable time' will vary from case-to-case, but normally will exceed the 'imminent' time frame applicable in a threat of injury analysis in original investigations."[67] [68]

Although the standard in a five-year review is not the same as the standard applied in an original antidumping duty investigation, it contains some of the same fundamental elements. The statute provides that the Commission is to "consider the likely volume, price effect, and impact of imports of the subject merchandise on the industry if the orders are revoked or the suspended investigation is terminated."[69] It directs the Commission to take into account its prior injury determination, whether any improvement in

---

[62] SAA at 883-84. The SAA states that "[t]he likelihood of injury standard applies regardless of the nature of the Commission's original determination (material injury, threat of material injury, or material retardation of an industry). Likewise, the standard applies to suspended investigations that were never completed." SAA at 883.

[63] While the SAA states that "a separate determination regarding current material injury is not necessary," it indicates that "the Commission may consider relevant factors such as current and likely continued depressed shipment levels and current and likely continued [sic] prices for the domestic like product in the U.S. market in making its determination of the likelihood of continuation or recurrence of material injury if the order is revoked." SAA at 884.

[64] See NMB Singapore Ltd. v. United States, 288 F. Supp. 2d 1306, 1352 (Ct. Int'l Trade 2003) ("'likely' means probable within the context of 19 U.S.C. § 1675(c) and 19 U.S.C. § 1675a(a)"), aff'd without opinion, 140 Fed.Appx. 268 (Fed. Cir. 2005); Nippon Steel Corp. v. United States, 26 CIT 1416, 1419 (2002) (same); Usinor Industeel, S.A. v. United States, 26 CIT 1402, 1404 nn.3, 6 (2002) ("more likely than not" standard is "consistent with the court's opinion"; "the court has not interpreted 'likely' to imply any particular degree of 'certainty'"); Indorama Chemicals (Thailand) Ltd. v. United States, Slip Op. 02-105 at 20 (Ct. Int'l Trade Sept. 4, 2002) ("standard is based on a likelihood of continuation or recurrence of injury, not a certainty"); Usinor v. United States, 26 CIT 767, 794 (2002) ("'likely' is tantamount to 'probable,' not merely 'possible'").

[65] Commissioner Lane notes that, consistent with her views in Pressure Sensitive Plastic Tape from Italy, Inv. No. AA1921-167 (Second Review), USITC Pub. 3698 (June 2004), she does not concur with the U.S. Court of International Trade's interpretation of "likely," but she will apply the Court's standard in this review and all subsequent reviews until either Congress clarifies the meaning or the U.S. Court of Appeals for the Federal Circuit addresses this issue.

[66] 19 U.S.C. § 1675a(a)(5).

[67] SAA at 887. Among the factors that the Commission should consider in this regard are "the fungibility or differentiation within the product in question, the level of substitutability between the imported and domestic products, the channels of distribution used, the methods of contracting (such as spot sales or long-term contracts), and lead times for delivery of goods, as well as other factors that may only manifest themselves in the longer term, such as planned investment and the shifting of production facilities." Id.

[68] In analyzing what constitutes a reasonably foreseeable time, Commissioner Koplan examines all the current and likely conditions of competition in the relevant industry. He defines "reasonably foreseeable time" as the length of time it is likely to take for the market to adjust to a revocation or termination. In making this assessment, he considers all factors that may accelerate or delay the market adjustment process including any lags in response by foreign producers, importers, consumers, domestic producers, or others due to: lead times; methods of contracting; the need to establish channels of distribution; product differentiation; and any other factors that may only manifest themselves in the longer term. In other words, this analysis seeks to define "reasonably foreseeable time" by reference to current and likely conditions of competition, but also seeks to avoid unwarranted speculation that may occur in predicting events into the more distant future.

[69] 19 U.S.C. § 1675a(a)(1).

the state of the industry is related to the order or the suspension agreement under review, whether the industry is vulnerable to material injury if the orders are revoked or the suspension agreement is terminated, and any findings by Commerce regarding duty absorption pursuant to 19 U.S.C. § 1675(a)(4).[70]

In evaluating the likely volume of imports of subject merchandise if the orders under review are revoked, the Commission is directed to consider whether the likely volume of imports would be significant either in absolute terms or relative to production or consumption in the United States.[71] In doing so, the Commission must consider "all relevant economic factors," including four enumerated factors: (1) any likely increase in production capacity or existing unused production capacity in the exporting country; (2) existing inventories of the subject merchandise, or likely increases in inventories; (3) the existence of barriers to the importation of the subject merchandise into countries other than the United States; and (4) the potential for product shifting if production facilities in the foreign country, which can be used to produce the subject merchandise, are currently being used to produce other products.[72]

In evaluating the likely price effects of subject imports if the orders under review are revoked, the Commission is directed to consider whether there is likely to be significant underselling by the subject imports as compared to domestic like products and whether the subject imports are likely to enter the United States at prices that otherwise would have a significant depressing or suppressing effect on the price of domestic like products.[73]

In evaluating the likely impact of imports of subject merchandise if the orders under review are revoked, the Commission is directed to consider all relevant economic factors that are likely to have a bearing on the state of the industry in the United States, including but not limited to: (1) likely declines in output, sales, market share, profits, productivity, return on investments, and utilization of capacity; (2) likely negative effects on cash flow, inventories, employment, wages, growth, ability to raise capital, and investment; and (3) likely negative effects on the existing development and production efforts of the industry, including efforts to develop a derivative or more advanced version of the domestic like product.[74] All relevant economic factors are to be considered within the context of the business cycle and the conditions of competition that are distinctive to the industry.[75] As instructed by the statute, we have

---

[70] 19 U.S.C. § 1675a(a)(1). The statute further provides that the presence or absence of any factor that the Commission is required to consider shall not necessarily give decisive guidance with respect to the Commission's determination. 19 U.S.C. § 1675a(a)(5). While the Commission must consider all factors, no one factor is necessarily dispositive. SAA at 886.

[71] 19 U.S.C. § 1675a(a)(2).

[72] 19 U.S.C. § 1675a(a)(2)(A-D).

[73] 19 U.S.C. § 1675a(a)(3). The SAA states that "[c]onsistent with its practice in investigations, in considering the likely price effects of imports in the event of revocation and termination, the Commission may rely on circumstantial, as well as direct, evidence of the adverse effects of unfairly traded imports on domestic prices." SAA at 886.

[74] 19 U.S.C. § 1675a(a)(4).

[75] 19 U.S.C. § 1675a(a)(4). Section 752(a)(6) of the Act states that "the Commission may consider the magnitude of the margin of dumping or the magnitude of the net countervailable subsidy" in making its determination in a five-year review. 19 U.S.C. § 1675a(a)(6). The statute defines the "magnitude of the margin of dumping" to be used by the Commission in five-year reviews as "the dumping margin or margins determined by the administering authority under section 1675a(c)(3) of this title." 19 U.S.C. § 1677(35)(C)(iv). See also SAA at 887.

considered the extent to which any improvement in the state of the domestic industry is related to the orders at issue and whether the industry is vulnerable to material injury if the orders are revoked.[76]

B. Subject TRB Imports From China[77]

1. Legal Standard in a Five-Year Review

The relevant legal standards applicable to five-year reviews are presented above in subsection III.A.[78]

2. Conditions of Competition

The following conditions of competition are relevant to our analysis of the TRB order under review.

Demand

In the first five-year reviews, the Commission found that demand for TRBs had grown considerably since the original investigations.[79] We find that demand for TRBs continued to grow during this review period. Apparent U.S. consumption of TRBs, measured by value,[80] was higher in 2005 than in 2000, although it fluctuated on an annual basis. Apparent U.S. consumption of TRBs decreased from $*** in 2000 to a period low of $*** in 2001, then increased steadily over the next four years, reaching a period high of $*** in 2005.

In the first five-year reviews, the Commission found that demand for TRBs is driven by the demand for the end use products that use TRBs.[81] This continues to be true. TRBs are used in a wide range of products and industries including automotive, construction, manufacturing, aerospace, medical,

---

[76] The SAA states that in assessing whether the domestic industry is vulnerable to injury if the order is revoked, the Commission "considers, in addition to imports, other factors that may be contributing to overall injury. While these factors, in some cases, may account for the injury to the domestic industry, they may also demonstrate that an industry is facing difficulties from a variety of sources and is vulnerable to dumped or subsidized imports." SAA at 885.

[77] Chairman Pearson dissenting. See Dissenting Views of Chairman Daniel R. Pearson. Chairman Pearson does not join in the remainder of Section III.B. regarding subject TRB imports from China.

[78] In its expedited review of the antidumping duty order on TRBs from China, Commerce found a likely dumping margin ranging from 0.0 percent to 29.40 percent applicable to eight named exporters, and an all-others rate of 29.40 percent. CR/PR at Table TRB-I-2. There have been no duty absorption findings by Commerce with respect to the TRB order under review. CR at TRB-I-6, PR at TRB-I-5.

[79] USITC Pub. 3309 at 23.

[80] Consistent with our approach in past investigations regarding bearings, we generally rely on value measures, rather than quantity, in assessing volume factors such as apparent consumption, shipments, and imports because of the inherent risks in relying on quantity data due to product mix issues. Literally thousands of bearings are subsumed in the three categories of bearings covered by these reviews. Unit values may vary from a few cents to thousands of dollars, reflecting differences in size, manufacturing tolerances, and other variables. CR at Overview-9-10, PR at Overview-8.

[81] USITC Pub. 3309 at 23.

and mining industries.[82] Demand for these products tends to follow general economic conditions.[83] U.S. GDP has grown by over six percent in 2004 and 2005, and the OECD forecasts similar near-term growth.[84] Most industry participants expect stable to increasing demand for TRBs in the near future. Specifically, strong near-term growth is expected in the automotive industry, the primary user of TRBs, as well as in other industrial markets. However, little to no growth is anticipated in the heavy truck market as the demand for heavy trucks is expected to normalize after several years of strong growth.[85]

Given the wide variety of customers and the multitude of distinct industries for which TRBs are used, we continue to find, as we did in the first reviews, that this industry is not characterized by a regular and measurable business cycle that might be characteristic of other industries. Whereas the various industries that use TRBs in their end use applications may be characterized by a specific business cycle, TRB producers respond to several different end-user industries and their individual business cycles. The diversity of customers and industries that use TRBs limits the effects of upturns or downturns in demand from particular customers or user industries, particularly to the extent that, at any given time, some TRB end-user industries are likely at different positions in their business cycles than other TRB end-user industries.

Supply

There has been some consolidation of the domestic TRB industry since the first reviews with two small producers of TRBs closing operations (American Roller Bearings Industries and Nucor).[86] However, the structure of the domestic TRB industry remains comparable to past periods examined. The domestic TRB industry continues to be the most concentrated of all the bearings industries, with Timken alone accounting for *** percent of U.S. production by value.[87]

The record shows that domestic TRB capacity declined irregularly by *** percent between 2000 and 2005, while domestic production also fell irregularly by *** percent over the same period.[88] Numerous purchasers stated that one factor affecting the supply of TRBs since the start of the period of review ("POR") was a sharp increase in raw material prices (steel, natural gas, etc.) which has led to a decrease in the availability of TRBs.[89] Additionally, 23 purchasers stated that they had experienced a

---

[82] Specifically, TRBs are used in applications where it is necessary to counteract friction caused by both radial and thrust loads. TRBs are widely used in the automotive, heavy machinery, and industrial sectors in transmissions and wheel applications. CR at TRB-I-14-15, PR at TRB-I-13.

[83] CR at TRB-II-9, PR at TRB-II-6.

[84] CR at TRB-II-9, PR at TRB-II-6.

[85] CR at TRB-II-10-TRB-II-12, PR at TRB-II-6-TRB-II-8. Domestic Interested Parties note that recent demand for heavy trucks is likely stimulated by purchasers buying new fleets of trucks before new EPA regulations come into effect in 2007. Domestic Interested Parties' Prehearing Brief Exh. 2 at 1.

[86] CR at TRB-I-22, PR at TRB-I-16.

[87] CR at TRB-III-1 n.3, PR at TRB-III-1 n.3. In the first reviews Timken accounted for ***. USITC Pub 3309 at 38.

[88] CR/PR at Table C-1.

[89] CR at TRB-II-3, PR at TRB-II-2.

supply shortage of TRBs, with *** purchasers responding that *** by Timken.[90] [91] Timken acknowledges placing some of its customers on allocation affecting "large bore products" due to simultaneous, large, and unanticipated increases in demand from multiple end-use segments, including railroad, truck, SUV, and agricultural, but added that most of the allocations are now finished.[92]

As in the first reviews, the domestic bearings industry is capital intensive.[93] Because of the industry's high fixed costs, production facilities must operate at high capacity utilization rates in order to maximize return on investment. The domestic industry's capacity utilization declined irregularly from a period high of *** percent in 2000 to *** percent in 2005.[94] TRBs are generally produced on dedicated machinery, and a producer cannot switch production from TRBs to other types of bearings without reconfiguration of production lines, which adds to costs. Thus, firms cannot switch easily from producing one type of bearing to another.[95]

The percentage of apparent U.S. consumption supplied by the domestic TRB industry declined during the period of review. The domestic industry's share of apparent U.S. consumption increased from *** percent in 2000 to a period high of *** percent in 2001, and then declined during the next four years, reaching a period low of *** percent in 2005.[96] The market share of subject imports from China rose from *** percent in 2000 to a period high of *** percent in 2002, and then declined to *** percent in 2005.[97] The market share of nonsubject imports declined from *** percent in 2000 to a period low of *** percent in 2001, and then increased over the next three years to a period high of *** percent in 2005.[98]

Substitutability and Other Conditions

In the first five-year reviews, the Commission found that "TRBs of a similar type, size, and configuration ... are generally interchangeable regardless of country of origin."[99] This continues to be true in this review. More than 70 percent of responding importers and 60 percent of responding purchasers considered U.S. and Chinese TRBs to be "always" or "frequently" interchangeable.[100] Chinese producers generally stated that Chinese TRBs are used in the same broad range of end uses as U.S. TRBs in the Chinese market.[101]

---

[90] CR at TRB-II-1, PR at TRB-II-1. At the hearing, purchasers Eaton, Caterpillar, and Deere reported being placed on allocation by Timken, causing lost sales and business disruptions. Hearing Transcript ("Tr.") at 254 (Dedoncker), 262 (Tefft), and 348 (Horack).

[91] The Commission received questionnaire responses from 32 purchasers of TRBs, of which approximately 12 reported being put on allocation by Timken.

[92] Hearing Tr. at 82-83 (Griffith). Timken stated that some specific small sectors such as aerospace remain on allocation.

[93] CR at Overview-14, PR at Overview-10.

[94] CR/PR at Table C-1.

[95] CR at TRB-I-19, PR at TRB-I-15. Questionnaire responses indicate that U.S. and foreign producers have not, and do not anticipate, producing other products on their equipment and machinery with the same production workers manufacturing TRBs.

[96] CR/PR at Table C-1.

[97] CR/PR at Table C-1.

[98] CR/PR at Table C-1.

[99] USITC Pub. 3309 at 39.

[100] CR/PR at Table TRB-II-4.

[101] CR at TRB-II-9 n.19, PR at TRB-II-5-II-6 n.19. These end uses include automotive (wheel and transmissions), variable speed devices, differential mechanisms, gearboxes, machine tool spindles, construction

(continued...)

Some purchasers and importers reported that U.S. and Chinese TRBs were not interchangeable because Chinese TRBs tended to be of lower quality and did not meet original equipment manufacturer ("OEM") certification or qualification requirements. The parties generally agree that a large share of OEMs require certification of their bearings and suppliers.[102] Out of the 32 responding purchasers, 22 reported that they required certification or qualification of their suppliers for 80 percent or more of their purchases of TRBs.[103] However, 26 purchasers reported that no suppliers had failed to receive approval.[104] Additionally, all six producers and 22 of the 24 importers who responded to the question, reported that they had never been unable to qualify any type of TRB.[105] Finally, 29 purchasers reported that subject TRBs "always" or "usually" meet minimum quality specifications.[106] A majority of responding purchasers rated domestically produced TRBs and imported TRBs from China as comparable in terms of the quality of the TRBs meeting industry standards.[107]

Purchasers overwhelmingly listed price and quality as the most important factors influencing purchasing decisions.[108] Additionally, 28 purchasers reported that price is "very important" to their purchasing decisions.[109] Moreover, a vast majority of responding purchasers reported that the prices of imported TRBs from China are generally lower than those of domestically produced TRBs.[110]

TRBs are sold by suppliers to either OEMs or distributors. Both domestically produced TRBs and subject imports are sold predominantly to end users/OEMs.[111]

Consistent with the Commission's findings in the first reviews, TRBs still consist of thousands of parts numbers, and even within part numbers, specialization or customization, sometimes in the form of minor variations, can occur. Producers seek to expand their offerings of specialized bearings in order to meet demand for those products. Once a producer has developed a particular customized bearing, it can produce that bearing in larger quantities, and the bearing becomes standard for that producer. While some TRBs are sold as a customized product, most are sold as standard TRBs by both U.S. producers and subject importers.[112] For 2005, questionnaire data indicated that standard bearings represented ***

---

[101] (...continued)
machines, agricultural machines, locomotive and railway freight cars.

[102] CR at Overview-11, PR at Overview-9.

[103] CR at TRB-II-20, PR at TRB-II-13. The qualification process can involve reviewing supplier quality, supplier capacity, market acceptance, contract terms, technical support, delivery reliability, financial stability, manufacturing process, and adherence to regulations.

[104] CR at TRB-II-20, PR at TRB-II-14.

[105] CR at TRB-II-20, PR at TRB-II-14.

[106] CR at TRB-II-19, PR at TRB-II-13.

[107] CR/PR at Table TRB-II-3.

[108] CR/PR at Table TRB-II-1.

[109] CR/PR at Table TRB-II-2. When asked how often they purchase the TRBs offered to them at the lowest price, no purchaser said always, 11 said usually, 18 said sometimes, and three said never. CR at TRB-II-17 n.47, PR at TRB-II-11 n.47.

[110] CR/PR at Table TRB-II-3.

[111] CR/PR at Table TRB-I-6. In 2005, U.S. producers reported shipping *** percent of their U.S. shipments of TRBs to endusers/OEMs, and the remaining *** percent to distributors/aftermarket customers. Comparatively, *** percent of subject imports of TRBs were shipped to endusers/OEMs and the remaining *** percent to distributors/aftermarket customers.

[112] CR at TRB-I-16, PR at TRB-I-14. Custom bearings were defined in the Commission questionnaires as those that (1) have a non-catalog number; (2) have a specific drawing number; (3) have a customer-specific part number; or (4) have been otherwise manufactured to a customer's specific order. Standard bearings were defined as all other
(continued...)

percent of the value of shipments for U.S. producers and *** percent of the value of shipments of subject imports from China.[113]

We find that the foregoing conditions of competition are likely to prevail for the reasonably foreseeable future and thus provide an adequate basis by which to assess the likely effects of revocation of the order within the reasonably foreseeable future.

3. Likely Volume of Subject Imports

In the original investigations, the Commission found a large and stable volume and market share of cumulated subject imports at a time of declining shipments by the domestic industry.[114] It found that the market penetration of cumulated subject imports remained relatively stable throughout the period of investigation, and that cumulated subject imports' U.S. market share increased from *** percent in 1983 to *** percent in 1986.[115]

In the first five-year reviews, the majority found that the volume of subject TRB imports from China would likely be significant in the reasonably foreseeable future if the order was revoked.[116] This conclusion was based on a "steady increase in subject TRB imports from China since the time of the original investigations," "some excess capacity in China," and a finding that "a significant portion of the excess capacity would be directed at the U.S. market should the order be revoked."[117] Moreover, the Commission found that Chinese producers of subject TRBs "compete at the low-end, commodity segment of the U.S. market where price is a particularly important factor in purchasing decisions" and "lower prices would have the effect of increasing Chinese producers' U.S. market share."[118]

The record in this review supports the conclusion that the order has served to restrain subject import volume. While subject imports have maintained a presence in the United States, their market share had been low; it was *** percent (by value) in 2005.[119] In 2002, the final year in which Tianshui

---

[112] (...continued)
"off the shelf" bearings. CR/PR at Table TRB-I-5. The definitions of standard and custom bearings are based on proposals by interested parties made in their comments on the draft questionnaires issued by Commission Staff. Nevertheless, Domestic Interested Parties claim that the terms custom and standard "are not specifically defined, commonly used, or uniformly understood" in the TRB industry. Domestic Interested Parties' Posthearing Brief, Koplan Exh. at 22.

[113] CR at TRB-I-17, PR at TRB-I-14.

[114] USITC Pub. 1983 at 15-16. For its 1987 determination on TRBs from China, the Commission cumulatively assessed the volume and price effects of subject imports from six countries: Hungary, China, Romania, Yugoslavia, Japan, and Italy. The orders on TRB imports from Yugoslavia and Italy were revoked in 1995 and 1996, respectively. See 60 Fed. Reg. 58046 (Nov. 24, 1995); 61 Fed. Reg. 52920 (Oct. 9, 1996). The orders on TRB imports from Hungary, Japan, and Romania were revoked in 2000. See 65 Fed. Reg. 42665 (July 11, 2000).

[115] USITC Pub. 1983 at 16.

[116] USITC Pub. 3309 at 27.

[117] Id. at 26.

[118] Id. at 27.

[119] CR/PR at Table C-1. Official Commerce statistics for subject imports from China were adjusted to reflect the revocation of the TRB orders on China as they related to Shanghai General (order revoked February 1997), Tianshui Hailin (order revoked November 2002), and Wafangdian (order revoked February 2001). CR/PR at Table TRB-IV-1.

Hailin's imports were included in subject imports, subject imports represented *** percent of U.S. TRB consumption, compared to *** percent in 1998.[120]

The record in this review indicates that China's reported capacity to produce TRBs increased sharply from 53.9 million bearings in 2000 to 102.2 million bearings in 2005, or by 89.8 percent.[121] Production rose every year of the POR, more than doubling from 40.5 million bearings in 2000 to 86.5 million bearings in 2005.[122] Moreover, as was true in the first review, the coverage of our data obtained on the Chinese industry likely amounts to less than half of all actual TRB production in China. In this review, the Commission received responses from 13 Chinese TRB producers covered by the order, but CCCME itself concedes that there are at least 63 TRB producers in China, at least 51 of which are also exporters.[123] Additionally, a comparison of Chinese Customs data, supplied by Global Trade Atlas, to the data provided in the responses of Chinese producers to the questionnaire confirms that a substantial portion of the Chinese TRB industry is unaccounted for.[124]

In the first five-year reviews, the Commission found that the Chinese TRB industry's 87.3 percent capacity utilization rate in 1998 indicated "some excess capacity in China."[125] In this review, we again find excess capacity in China as the Chinese industry's capacity utilization rate remained below that figure for the entire period. Chinese capacity utilization increased from a period low of 75.1 percent in 2000 to a period high of 86.8 percent in 2003, and then declined to 84.6 percent in 2005.[126]

We find evidence that a significant portion of Chinese capacity, particularly its currently unused capacity, would be likely directed to the United States should the order be revoked. Although demand in the home market has increased since the first review, Chinese producers currently export approximately *** percent of their TRBs.[127] China's export dependence is demonstrated by China's growing TRB trade imbalance over the POR, with its export surplus increasing from 23.8 million units in 2000 to 115.5 million units in 2005, and from $18.3 million in 2000 to $116 million in 2005.[128] China is currently the world's fifth largest exporter of TRBs, and its global exports exhibited average annual growth of 42 percent during 2000-2004.[129] Even with the order in place, and Chinese exports to other markets increasing at a faster rate, the United States was China's single largest export market throughout the period of review, by value and quantity, usually by a wide margin.[130] Moreover, although most producers and importers reported that comparisons of TRB prices in the U.S. and non-U.S. markets were difficult,

---

[120] CR/PR at Table TRB-I-1. CCCME notes that there is a discrepancy ***. See CCCME's Final Comments at 12. We note that ***.

[121] CR/PR at Table TRB-IV-4. In the first review, China's capacity in 1998 was reported to be 39.9 million bearings. See USITC Pub. 3309 at TRB-Table-IV-3.

[122] CR/PR at Table TRB-IV-4.

[123] CCCME's Posthearing Brief, Answers to Commission Questions, at 12. CCCME argues that not all of the 51exporters identified export TRBs to the United States.

[124] Chinese Customs data indicate that total Chinese exports to all markets in 2005 amounted to 118.9 million units with a value of $182.4 million, while the 13 responding Chinese firms reported exporting a total of 32.0 million TRBs with a value of $88.7 million. CR/PR at Tables TRB-IV-4 & TRB-IV-8.

[125] USITC Pub. 3309 at 40.

[126] CR/PR at Table TRB-IV-4.

[127] CR/PR at Table TRB-IV-4.

[128] CR/PR at Tables TRB-IV-7 and TRB-IV-8. We recognize that the data used to compile Table TRB-IV-5 through Table TRB-IV-8 represent imports and exports for HTS heading 8482.20 (tapered roller bearings, including cone and tapered roller assemblies), which are not exactly comparable to the TRB imports subject to the scope of the review.

[129] CR/PR at Table TRB-IV-5.

[130] CR/PR at Table TRB-IV-8.

those that could compare generally described U.S. prices as higher, confirming that the United States is an attractive market for subject imports.[131]

We also find probative the behavior of three Chinese producers of TRBs for which the order has been revoked. When the order was lifted with respect to these Chinese companies, their exports to the United States soared.[132] After 2002, when the order was revoked for the last of these three producers (Tianshui Hailin), nonsubject imports from these producers rose ***, from $*** in 2002 to $*** in 2005 based on U.S. Customs data.[133] Their share of total TRB imports (by value) rose from *** percent in 2002 to *** percent in 2005.[134] This indicates that producers of TRBs in China are able to rapidly increase their sales to the United States absent the restraining effects of the order, and that product differences and purchasers' qualification requirements do not significantly impede such sales.

Further, Chinese producers of subject TRBs currently compete primarily in the low-end, commodity segment of the U.S. TRB market where price is a particularly important factor in purchasing decisions. Lifting the order would provide further incentive to Chinese TRB producers to increase shipments of their price-sensitive product to the U.S. market.

CCCME has argued that there is little direct competition between subject imports and domestic TRBs. In essence, CCCME claims that due to the segmented structure of the TRB market, the rigors of the qualification process at major OEM accounts, and the rationalization of production on a global basis by Timken, Chinese producers compete solely in the low-value bearings market in the United States., while Timken's domestic production is almost exclusively of high-value bearings.[135] Moreover, CCCME has alleged that Chinese TRBs exported to the United States are all made of less expensive, less durable through-hardened steel, while Timken's TRBs are made of more expensive, more durable, case-carburized steel.[136] In short, CCCME argues that the difference between case-carburized TRBs and through-hardened TRBs means that Timken's TRBs and subject TRBs are used by different purchasers in different applications and do not compete based on price.

We find that the record of this review does not support CCCME's arguments. First, as discussed in "Conditions of Competition," a majority of importers and purchasers considered U.S. and Chinese TRBs to be "always" or "frequently" interchangeable. Second, Chinese producers and exporters indicated that Chinese TRBs are used in the same broad range of end uses as U.S. TRBs. Third, a vast majority of TRBs sold by both U.S. producers and subject importers are standard bearings. Chinese TRB producers manufacture a broad range of standard TRBs that compete directly with standard U.S.-produced TRBs, including TRB part numbers that account for *** percent of the volume of one of Timken's TRB facilities and almost *** percent of the volume of *** other Timken facilities ***. Finally, a significant portion of Timken's sales, *** percent, are to purchasers who do not require a supplier to be qualified.[137] Thus, even assuming *arguendo* that *** percent of Timken's sales required qualified suppliers and that Chinese companies somehow cannot qualify for these sales, the remaining *** percent of Timken's sales, approximately $*** of apparent domestic TRB consumption in 2005, is immediately subject to competition from increased subject imports upon revocation of the order.

---

[131] CR at TRB-V-6, PR at TRB-V-4.

[132] The large increase in the volume of imports from Chinese producers of TRBs after revocation of their orders shows that the rise in nonsubject imports over the POR does not present a significant barrier to subject import competition should the order on TRBs from China be revoked.

[133] CR at TRB-IV-5, PR at TRB-IV-4.

[134] CR/PR at TRB-IV-1.

[135] See, e.g., CCCME's Posthearing Brief at 5.

[136] See CCCME's Posthearing Brief at 5-8. CCCME first raised this argument in its posthearing brief, and claims that the distinction between case-carburized bearings and through-hardened bearings was never an issue in prior investigations. Id. at 8 n.22.

[137] See Domestic Interested Parties' Posthearing Brief, Exh. Koplan at 21.

Moreover, CCCME acknowledges the Chinese TRB producers have the capability to produce high-value TRBs, and are already selling high-value TRBs to European and Chinese customers.[138] Therefore, it is likely that within a reasonably foreseeable time Chinese producers will qualify for the same kind of sales of high-value TRBs to major U.S. customers. The parties agree that the supplier qualification process is not uniform, and varies on a customer-to-customer basis both as to the time required and the level of review applied.[139] According to purchaser responses, the qualification process can be completed relatively quickly, within six months, or can take up to three years to complete, depending on such factors as the intended application of the TRB, the market needs of the particular purchaser or customer, or whether the customer has an established review process.[140] A number of Chinese TRB producers are owned by, or are related to, major multinational bearings manufacturers. These multinational TRB producers can use those Chinese operations as an export platform to the United States, possibly reducing any qualification period.[141] Additionally, Domestic Interested Parties note that major multinational producers of railroad TRBs in China are currently certified by the Association of American Railroads to supply railroad TRBs to the United States.[142]

Additionally, we find unpersuasive CCCME's argument that the distinction between case-carburized and through-hardened TRBs prevents competition between Chinese and U.S. TRBs. Although CCCME presents this distinction as a new argument, it overlooks the fact that this distinction existed in the original investigations. In the original investigations, respondents argued that their TRBs were of such inferior quality that they did not compete with U.S. TRBs.[143] After noting that "some quality differences do appear to exist," recognizing that domestic bearings are "case hardened" while "many of the imports are 'through hardened' which results in a more brittle bearing that does not last as long," the Commission found that domestic TRBs do compete with the subject imports.[144] In the first reviews, the staff report once again provided a description of "case hardening," yet the Commission found direct competition between domestically produced TRBs and subject imports.[145] We find no new evidence in this review that requires a different outcome.[146]

We therefore conclude, based on the record of this review, that the volume of subject TRB imports from China would likely be significant in the reasonably foreseeable future if the order is revoked.

---

[138] See CCCME's Posthearing Brief, Answers to Commission Questions at 16-17.

[139] Qualifying a new supplier also presents varying costs to purchasers. See CR at Overview-11 n.32, PR at Overview-9 n.32.

[140] See Purchaser QRs at Questions III-24 & III-25.

[141] CR at TRB-IV-7, PR at TRB-IV-5-IV-6. Major multinational TRB producers such as FAG, Koyo, NSK, and SKF, have TRB production in China, are already qualified with U.S. OEMs for TRBs from other countries, and are currently attempting to qualify their Chinese TRBs with U.S. OEMs. CR at TRB-II-20 n.50, PR at TRB-II-14 n.50. Moreover, several ***.

[142] Domestic Interested Parties' Prehearing Brief at 80-81.

[143] USITC Pub. 1983 at A-54-56.

[144] USITC Pub. 1983 at 13-15. In the original investigations, the Commission noted "that many imports are not suitable for the high precision segment of the market. But in those applications where extremely precise tolerance and longer life of the bearing are not as important, imports are able to compete with domestic production."

[145] USITC Pub. 3309 at 26-27.

[146] Indeed, evidence on the record indicates that Chinese TRB producers are more competitive with domestically produced TRBs than was the case in earlier proceedings, because Chinese producers now have access to better quality steel, and at least ***. Domestic Interested Parties' Posthearing Brief at 6 n.27. CCCME acknowledges that there is some Chinese production of case-carburized bearings for China railways, but believes that all Chinese bearings exported to the United States are through-hardened. CCCME's Posthearing Brief at 7 n.18.

4. Likely Price Effects of Subject Imports

In the original investigations, the Commission found general price decreases during the period of investigation and nearly universal underselling by cumulated subject imports.[147] The record further demonstrated that subject imports were purchased because of lower prices and that prices in the U.S. market were trending downward.[148] Moreover, the Commission found that prices had been insufficient to cover domestic producers' operating costs.[149]

In the first five-year reviews, the Commission found that revocation of the antidumping duty order on China would likely lead to significant underselling by the subject imports of the domestic like product, as well as significant price depression and suppression within a reasonably foreseeable time. The Commission stated that the "limited pricing data collected in these reviews" established "uniform underselling by Chinese subject imports, even with the order in place."[150] The Commission explained that subject imports undersold the U.S. product for every quarter for which price comparisons were available, with average underselling margins ranging from 57.4 percent to 65.4 percent.[151] Additionally, the Commission found that the Chinese subject imports compete "in the price-competitive, commodity segment of the TRB market," and that, should the order be revoked, Chinese producers would likely price "aggressively to gain additional market share."[152]

The limited pricing data in this review likewise reveal almost uniform underselling by subject Chinese imports, even with the order in place.[153] Chinese subject imports undersold the U.S. product in 217 of 222 quarters for which pricing data were available,[154] at average underselling margins of 68.4 percent in 2000, 65.2 percent in 2001, 61.9 percent in 2002, 67.8 percent in 2003, 67.1 percent in 2004, and a period high of 72.5 percent in 2005.[155]

As discussed above in the section on "Conditions of Competition," purchasers reported that price is a very important factor in making purchasing decisions, and the domestic like product and subject imports are substitutable.[156] Therefore, if the order were revoked, subject imports would likely continue to be priced aggressively to gain market share, and would likely continue to undersell the domestic like product by substantial margins so as to significantly suppress domestic prices. As noted above, the volume of subject imports is likely to increase significantly in the reasonably foreseeable future if the antidumping order is revoked. At these likely volumes, the subject imports from China would be likely to have a significant effect on the prices of the domestic like product.

In particular, we find that the significant volumes of subject imports are likely to suppress the price increases necessary to compensate for the domestic industry's increasing costs. Over the period of

---

[147] USITC Pub. 1983 at 16.

[148] Id.

[149] Id.

[150] USITC Pub. 3309 at 27.

[151] Id.

[152] Id.

[153] Reported pricing data accounted for approximately 9.8 percent of U.S. producers' shipments of TRBs by quantity and 26.4 percent of U.S. shipments of subject imports from China in 2005. CR at TRB-V-7, PR at TRB-V-5. By value, the pricing data represent 1.8 percent of U.S. shipments of U.S. product and 9.2 percent of U.S. shipments of Chinese product in 2005. CR at TRB-V-8 n.18, PR at TRB-V-5 n.18.

[154] CR/PR at Table TRB-V-2. The only instances in which subject imports from China oversold the U.S. product were for Product ***, and involve sales from ***. CR/PR at Table TRB-V-3.

[155] Derived from calculations based on CR/PR Tables G-1 to G-10.

[156] As discussed above, a majority of responding purchasers and importers reported that the domestic product and subject imports are interchangeable.

review prices generally increased for the U.S. pricing products, but not enough to fully offset the increases in cost of goods sold ("COGS"), as evidenced by the *** percentage point increase in the ratio of COGS to sales.[157] Moreover, for most of the pricing products, domestic TRB volume has decreased significantly in the face of increasing volumes of low-priced subject imports, indicating that the domestic industry is maintaining price levels at the expense of volume. In the event of revocation, we find it likely that increasing volumes of subject imports would contribute significantly to keeping domestic producers from recouping increases in costs. We therefore find that there likely would be underselling by the subject imports that, when combined with increased volumes of subject imports, would likely lead to significant adverse price effects.

5. Likely Impact of Subject Imports

In the original investigations, the Commission found that the large and stable volume and penetration of the cumulated subject imports at a time of declining shipments by the domestic industry, coupled with evidence of fairly consistent underselling by imports at a time of declining U.S. prices, demonstrated that the subject imports were a cause of material injury to the domestic industry.[158]

In the first five-year reviews, the Commission found that if the antidumping duty order on China were revoked, subject imports from China would be likely to have a significant adverse impact on the domestic industry within a reasonably foreseeable time.[159] At the outset, the Commission explained that the condition of the domestic industry had improved since the original orders were imposed in 1987. The Commission noted that the operating income to sales ratio for the domestic industry went from losses during the original investigations to profits during the first period of review.[160] Moreover, domestic producers' operating income increased from interim 1998 to interim 1999, and the domestic industries' production and capacity to produce TRBs both increased from 1997-1998.[161] Therefore, based on the performance of the domestic industry, the Commission did not find that the domestic industry was in a vulnerable state.[162]

However, the Commission found that revocation of the antidumping duty order on TRBs from China would likely "lead to a significant increase in the volume of subject imports from China that would undersell the domestic like product and significantly suppress or depress U.S. prices."[163] The Commission reasoned that these developments would likely have a significant adverse impact on production, shipments, sales, market share, and revenues of the domestic industry.[164] In the Commission's view, this reduction in the domestic industry's production, shipments, sales, market share, and revenues would adversely impact the domestic industry's profitability as well as its ability to raise capital and make the necessary capital investments.[165]

Most industry performance indicators declined during the current period of review. Although there were significant increases in demand for TRBs over the POR, the domestic industry's market share,

---

[157] CR/PR at Table C-1. Over the POR, the price of steel bar, the primary raw material in TRBs, increased from $*** per ton in 2000 to $*** per ton in 2005. CR at TRB-V-1, PR at TRB-V-1. Increases in unit *** as well as unit *** were only partially offset by decreases in unit ***. CR at TRB-III-15, PR at TRB-III-4.

[158] USITC Pub. 1983 at 15-16.

[159] USITC Pub. 3309 at 28.

[160] USITC Pub. 3309 at 28.

[161] USITC Pub. 3309 at 28.

[162] USITC Pub. 3309 at 28.

[163] USITC Pub. 3309 at 28.

[164] USITC Pub. 3309 at 28.

[165] USITC Pub. 3309 at 28.

capacity, production, and capacity utilization all declined over the POR.[166] U.S. producers' market share, by value, fell from *** percent in 2000 to a period low of *** percent in 2005, a decline of *** percentage points.[167] Capacity declined from *** bearings in 2000 to *** bearings in 2005, an overall decline of *** percent. Production declined from *** bearings in 2000 to *** bearings in 2005, an overall decline of *** percent.[168] Capacity utilization declined from *** percent in 2000 to *** percent in 2005, an overall decline of *** percentage points.

U.S. producers' COGS as a share of net sales increased from *** percent in 2000 to *** percent in 2005, a *** percentage point increase. However, net sales, by value, increased from $*** in 2000 to $*** in 2005, a *** percent increase over the period.[169] U.S. shipments, by value, also increased from $*** in 2000 to $*** in 2005, an increase of *** percent.[170] U.S. shipments, by quantity, declined from *** bearings in 2000 to ***, an overall decline of *** percent.[171]

Gross profit increased from $*** in 2000 to a period high of $*** in 2005. However, operating income declined from $*** in 2000 to $*** in 2005, a *** percent decline over the period. Unit operating income followed a similar trend, declining by *** percent over the period. Two of seven reporting domestic producers reported losses in 2005.[172] Additionally, operating income as a percentage of net sales dropped from *** percent in 2000 to *** percent in 2005, a *** percentage point decline over the period.[173]

The number of production and related workers declined from *** in 2000 to a near-period low of *** in 2005, a decline of *** percent.[174] Hours worked also declined over the period by *** percent. However, hourly wages increased from a period low of $*** in 2000 to a period high of $*** in 2005, an increase of *** percent, and productivity also increased *** percent over the period.[175] Capital expenditures declined from a period high of $*** in 2000 to $*** in 2005, a decline of *** percent.

Based on the industry's declines in many key industry performance indicators over the POR, on balance we find that the industry is currently vulnerable to material injury. As discussed above, we have concluded that revocation of the antidumping duty order on China would lead to significant increases in the volume of subject imports. Because the subject imports are generally substitutable for the domestic like product, and the domestic industry supplies the majority of the U.S. market, any increase in subject import volumes will likely be in substantial part at the expense of an already vulnerable domestic industry. In light of the fact that U.S. demand for TRBs is unlikely to show robust increases in the reasonably foreseeable future from the high demand experienced during the POR, such increases in subject import volume will likely have the effect of exacerbating the declines in the domestic industry's capacity, production, market share, employment, and capital expenditures. Additionally, because of the likely aggressive pricing of the subject imports, the domestic industry will either need to cut prices for the

---

[166] CR/PR at Table C-1. Capacity and quantity were lower throughout the POR than in 1998, the last year of the first reviews, while capacity utilization was the same in 1998 and 2005. CR/PR at Table TRB-I-1.

[167] CR/PR at Table C-1. U.S. producers' market share by quantity fell from *** percent in 2000 to a period low of *** percent in 2005, a drop of *** percentage points. Id. Nonsubject sources' market share increased over the period by *** percent by value, and *** percent by quantity. Id.

[168] CR/PR at Table C-1.

[169] CR/PR at Table C-1.

[170] CR/PR at Table C-1. Unit values increased from $*** in 2000 to $*** in 2005, an increase of *** percent.

[171] CR/PR at Table C-1.

[172] ***. CR at TRB-III-15 n.14, PR at TRB-III-4 n.14.

[173] Timken, the *** domestic producer of TRBs, reported ***, although its operating income as a percentage of net sales was *** percentage points in 2005 than in 2000. CR/PR at Table TRB-III-9.

[174] CR/PR at Table C-1.

[175] CR/PR at Table C-1.

domestic like product or lose sales.[176] Under either scenario, the domestic industry's revenues will likely decline significantly in light of the anticipated volume of subject imports. This, in turn, will likely lead to further declines in the industry's operating performance, which will continue the trend of declining profitability for the industry in the reasonably foreseeable future. Accordingly, we conclude that revocation of the order on subject imports from China would likely have a significant adverse impact on the domestic industry.

C. Subject BB Imports From France, Germany, Italy, Japan, Singapore and the United Kingdom

1. Legal Standard in a Five Year Review

The relevant legal standards applicable to five year reviews are presented above in subsection III.A.[177]

2. Cumulation

a. Framework

Section 752(a) of the Act provides that:

> the Commission may cumulatively assess the volume and effect of imports of the subject merchandise from all countries with respect to which reviews under section 1675(b) or (c) of this title were initiated on the same day, if such imports would be likely to compete with each other and with domestic like products in the United States market. The Commission shall not cumulatively assess the volume and effects of imports of the subject merchandise in a case in which it determines that such imports are likely to have no discernible adverse impact on the domestic industry.[178]

Thus, cumulation is discretionary in five-year reviews. However, the Commission may exercise its discretion to cumulate only if the reviews are initiated on the same day and the Commission determines that the subject imports are likely to compete with each other and the domestic like product in the U.S. market. The statute precludes cumulation if the Commission finds that subject imports from a country are likely to have no discernible adverse impact on the domestic industry.[179] We note that neither the statute nor the Uruguay Round Agreements Act ("URAA") Statement of Administrative Action ("SAA") provides specific guidance on what factors the Commission is to consider in determining that imports "are likely to have no discernible adverse impact" on the domestic industry.[180] With respect to this provision,

---

[176] U.S. TRB demand is highly inelastic. CR at TRB-II-26, PR at TRB-II-18. Therefore, increased subject imports would not stimulate increased demand for and consumption of TRBs; rather, increased subject imports would drive down domestic TRB prices.

[177] In the final results of its sunset reviews, Commerce found company specific margins as follows: France, 12.56 to 12.79 percent; Germany, 1.21 to 7.35 percent, Italy, 2.52 to 16.04 percent; Japan, 6.62 to 28.33 percent; and United Kingdom, 0.23 percent. Commerce has not made a duty absorption finding in its last administrative review with respect to the subject antidumping duty order. CR at BB-I-10, PR at BB-I-9.

[178] 19 U.S.C. § 1675a(a)(7).

[179] 19 U.S.C. § 1675a(a)(7).

[180] SAA, H.R. Rep. No. 103-316, vol. I (1994).

the Commission generally considers the likely volume of the subject imports and the likely impact of those imports on the domestic industry within a reasonably foreseeable time if the orders are revoked.[181]

In these reviews, the statutory requirement for cumulation that all reviews be initiated on the same day is satisfied as Commerce initiated all the reviews on June 1, 2005.[182]

The Commission generally has considered four factors intended to provide a framework for determining whether the imports compete with each other and with the domestic like product.[183] Only a "reasonable overlap" of competition is required.[184] In five-year reviews, the relevant inquiry is whether there likely would be competition even if none currently exists. Moreover, because of the prospective nature of five-year reviews, we have examined not only the Commission's traditional competition factors, but also other significant conditions of competition that are likely to prevail if the orders under review are terminated. The Commission has considered factors in addition to its traditional competition factors in other contexts where cumulation is discretionary.[185]

We do not find that subject imports from France, Germany, Italy, Japan, or the United Kingdom would be likely to have no discernible adverse impact on the domestic industry if the orders were revoked; we also find a likely reasonable overlap of competition between the subject imports from France, Germany, Italy, Japan, and the United Kingdom and the domestic like product if the orders were revoked. With respect to Singapore, Chairman Pearson and Commissioner Koplan find that subject

---

[181] For a discussion of the analytical framework of Commissioners Koplan and Hillman regarding the application of the "no discernible adverse impact" provision, see Malleable Cast Iron Pipe Fittings from Brazil, Japan, Korea, Taiwan, and Thailand, Inv. Nos. 731-TA-278-280 (Review) and 731-TA-347-348 (Review), USITC Pub. 3274 (Feb. 2000). For a further discussion of Commissioner Koplan's analytical framework, see Iron Metal Construction Castings from India; Heavy Iron Construction Castings from Brazil; and Iron Construction Castings from Brazil, Canada, and China, Inv. Nos. 303-TA-13 (Review); 701-TA-249 (Review); and 731-TA-262, 263, and 265 (Review), USITC Pub. 3247 (Oct. 1999) (Views of Commissioner Stephen Koplan Regarding Cumulation). For a discussion of the analytical framework of Chairman Pearson with respect to no discernible adverse impact, see Additional Views of Commissioner Daniel R. Pearson, Certain Stainless Plate from Belgium, Canada, Italy, Korea, South Africa, and Taiwan, Inv. Nos. 701-TA-376, 377, 379 and 731-TA-788-793 (Review), USITC Pub. 3784 (June 2005).

[182] 70 Fed. Reg. 31423 (France, Germany, Italy, United Kingdom) & 31423 (Japan, Singapore) (June 1, 2005).

[183] The four factors generally considered by the Commission in assessing whether imports compete with each other and with the domestic like product are: (1) the degree of fungibility between the imports from different countries and between imports and the domestic like product, including consideration of specific customer requirements and other quality related questions; (2) the presence of sales or offers to sell in the same geographical markets of imports from different countries and the domestic like product; (3) the existence of common or similar channels of distribution for imports from different countries and the domestic like product; and (4) whether the imports are simultaneously present in the market. See, e.g., Wieland Werke, AG v. United States, 718 F. Supp. 50 (CIT 1989).

[184] See Mukand Ltd. v. United States, 937 F. Supp. 910, 916 (CIT 1996); Wieland Werke, AG, 718 F. Supp. at 52 ("Completely overlapping markets are not required."); United States Steel Group v. United States, 873 F. Supp. 673, 685 (CIT 1994), aff'd, 96 F.3d 1352 (Fed. Cir. 1996). We note, however, that there have been investigations where the Commission has found an insufficient overlap in competition and has declined to cumulate subject imports. See, e.g., Live Cattle from Canada and Mexico, Inv. Nos. 701-TA-386 (Preliminary) and 731-TA-812-813 (Preliminary), USITC Pub. 3155 at 15 (Feb. 1999), aff'd sub nom, Ranchers-Cattlemen Action Legal Foundation v. United States, 74 F. Supp.2d 1353 (CIT 1999); Static Random Access Memory Semiconductors from the Republic of Korea and Taiwan, Inv. Nos. 731-TA-761-762 (Final), USITC Pub. 3098 at 13-15 (Apr. 1998).

[185] See, e.g., Torrington Co. v. United States, 790 F. Supp. at 1172 (affirming Commission's determination not to cumulate for purposes of threat analysis when pricing and volume trends among subject countries were not uniform and import penetration was extremely low for most of the subject countries); Metallverken Nederland B.V. v. United States, 728 F. Supp. 730, 741-42 (CIT 1989); Asociacion Colombiana de Exportadores de Flores v. United States, 704 F. Supp. 1068, 1072 (CIT 1988).

imports are likely to have no discernible adverse impact on the domestic industry if the order were revoked and, accordingly, conclude that the statute precludes cumulation of subject imports from Singapore with other subject imports.[186] Significant differences in the conditions of competition with respect to the subject imports from Singapore versus the other subject imports and with regard to the domestic like product also support the exercise of discretion to cumulate only the likely volume and effects of subject imports from France, Germany, Italy, Japan, and the United Kingdom.[187] Because we do not cumulate subject imports from Singapore due to no likely discernible adverse impact or differences in conditions of competition, we find it unnecessary to decide the issue of reasonable overlap of competition with respect to subject imports from Singapore.[188]

b. Likelihood of No Discernible Adverse Impact

European and Singapore Respondents argue that subject imports from their respective countries are likely to have no discernible adverse impact on the domestic industry if the orders are revoked.[189] Domestic interested parties contest these claims.[190] As set forth below, we find that subject imports from France, Germany, Italy, Japan, and the United Kingdom are not likely to have no discernible adverse impact if the orders are revoked. In addition, Chairman Pearson and Commissioner Koplan find that BBs from Singapore are likely to have no discernible adverse impact if the order is revoked.

i. France

Subject imports from France were $10.7 million in 1985 and $16.3 million in 1987.[191] They have continued to supply the U.S. market in the years since the order was imposed, and had a value of $24.8 million in 1998, the last full year of the first review period. During the period of the second review, subject imports from France ranged in value from $22 million in 2003 to $27 million in 2000.[192] In 2005,

---

[186] Vice Chairman Aranoff and Commissioner Hillman find it unnecessary to reach the issue of no discernible adverse impact with respect to subject imports from Singapore because they decline to cumulate such imports on the basis of differences in conditions of competition, as discussed below.

[187] Chairman Pearson and Commissioner Koplan concur in finding differences in conditions of competition with respect to subject imports from Singapore, but find that not cumulating subject imports from Singapore is mandatory as opposed to discretionary based on their finding of no likely discernible adverse impact.

[188] Commissioner Lane does not join in the cumulation determination with respect to subject imports from Singapore. In her view, such imports would be likely to have a discernible adverse impact on the domestic industry if the order is revoked, and she does not find that the differences in conditions of competition are sufficient to justify no cumulating subject imports from Singapore with subject imports from the other five countries.

[189] See, e.g., SKF Prehearing Brief at 44-49 (arguing for all subject European countries); Schaeffler Prehearing Brief at 44-49 (same; Schaeffler submitted briefs that, with respect to BBs, tracked SKF's); NSK Europe Ltd. Prehearing Brief at 3-6 (argument limited to no discernible adverse impact for UK imports) (collectively, "European Respondents"); Singapore Respondents' Prehearing Brief at 10-11. Henceforth, cites to "European Respondents'" briefs are to SKF's.

[190] See, e.g., Domestic Interested Parties' Prehearing Brief at 16-17.

[191] CR/PR at Table BB-I-1. Consistent with our approach in past investigations, we generally rely on value measures, rather than quantity, in assessing volume factors such as apparent consumption, shipments, and imports because of the inherent risks in relying on quantity data due to product mix issues. Literally thousands of bearings are subsumed in the three categories of bearings covered by these reviews. Unit values may vary from a few cents to thousands of dollars, reflecting differences in size, manufacturing tolerances, and other variables. CR/PR at Overview-9-Overview-10.

[192] CR/PR at Table BB-I-1.

they had a value of $23.8 million.[193] Their share of U.S. consumption during the period of review was consistently 0.9 percent to 1.0 percent,[194] and their share of the value of total U.S. imports of BBs ranged from 2.4 percent in 2005 to 3.1 percent in 2001.[195]

Reported production capacity for subject BBs from France increased *** percent from *** units in 2003 to *** units in 2005.[196] Capacity utilization rates *** during the period of review, from *** percent in 2000 to *** percent in 2005, whereas they remained steady during the first review at *** percent to *** percent.[197]

The BB industry in France remains export-oriented, with total exports accounting for over *** percent of all shipments throughout the period of review, although the *** of such exports were within the European Union ("EU").[198] Exports to the United States accounted for *** percent or less of all shipments, similar to the first review.[199] France is the fifth largest exporter of ball bearings in the world.[200] Total exports of subject BBs from France increased from $*** in 2000 to $*** in 2005.[201]

Given the conditions of competition in the U.S. BB market (discussed below), the volume of exports from France to the United States under the order's discipline, the size of the French industry and its available capacity, and the export orientation of the French industry, we do not find that subject imports from France would be likely to have no discernible adverse impact on the domestic industry if the order is revoked.

ii. Germany

Subject imports from Germany were $47.8 million in 1985 and $68.3 million in 1987.[202] They have continued to supply the U.S. market since the order was imposed, and had a value of $47.5 million in 1998. During the period of the second review, subject imports from Germany increased 40.8 percent by value, from $36.8 million in 2000 to $51.8 million in 2005.[203] Their share of U.S. consumption during the period of review increased from 1.3 percent in 2000 to 1.9 percent in 2005,[204] and their share of total value of U.S. imports of BBs increased from 3.9 percent in 2000 to 5.1 percent in 2005.[205]

---

[193] CR/PR at Table BB-I-1.

[194] CR/PR at Table BB-I-1.

[195] CR/PR at Table BB-IV-1.

[196] CR/PR at Table BB-IV-4. No comparison for 2000 to 2005 is possible due to the absence of capacity data for *** in 2000 and 2001. CR at BB-IV-16 n.23, PR at BB-IV-12 n.23.

[197] CR/PR at Table BB-IV-4; Confidential Staff Report from First Reviews at Table BB-IV-3.

[198] CR/PR at Table BB-IV-4.

[199] CR/PR at Table BB-IV-4.

[200] CR/PR at Table BB-IV-11.

[201] CR/PR at Table BB-IV-4.

[202] CR/PR at Table BB-I-1.

[203] CR/PR at Tables BB-I-1, C-2.

[204] CR/PR at Table BB-I-1.

[205] CR/PR at Table BB-IV-1.

Reported production capacity for subject BBs from Germany increased from *** units in 2000 to *** units in 2005.[206] Capacity utilization rates declined from a high of *** percent in 2001 to *** percent in 2005, which is below reported rates during the period of the first review.[207]

The BB industry in Germany remains somewhat export-oriented, with total exports accounting for approximately *** of all shipments by value during the period of review, although the *** of such exports were within the EU.[208] Exports to the United States accounted for less than *** percent of all shipments, similar to the first review.[209] Germany is the second largest exporter of ball bearings in the world.[210] Total exports of subject BBs from Germany increased from $*** in 2000 to $*** in 2005.[211]

Given the conditions of competition in the U.S. BB market, the increasing volume of exports to the United States under the order's discipline, the size of the German industry and its available capacity, and the export orientation of the German industry, we do not find that subject imports from Germany would be likely to have no discernible adverse impact on the domestic industry if the order is revoked.

iii. Italy

Subject imports from Italy were $22.6 million in 1985 and $22.7 million in 1987.[212] They have continued to supply the U.S. market in the years since the order was imposed, and had a value of $19.4 million in 1998. During the period of the second review, subject imports from Italy ranged in value from $18.6 million in 2001 to $33.4 million in 2003.[213] In 2005, they had a value of $20.6 million.[214] Their share of U.S. consumption during the period of review ranged from 0.7 percent in 2001 and 2005 to 1.3 percent in 2003 and 2004,[215] and their share of the value of total U.S. imports of BBs ranged from 2.0 percent in 2005 to 4.1 percent in 2003.[216]

Reported production capacity for subject BBs from Italy declined during the period of review, from *** units in 2000 to *** units in 2005.[217] Capacity utilization rates increased during the period of review, from *** percent in 2000 to *** percent in 2005.[218]

The BB industry in Italy remains export-oriented, with total exports ranging from *** percent in 2001 to *** percent in 2000 of all shipments throughout the period of review. The *** of such exports were within the EU. In 2005, *** percent of all shipments were exported.[219] Exports to the United States

---

[206] CR/PR at Table BB-IV-5.

[207] CR/PR at Table BB-IV-5; Confidential Staff Report from First Reviews at Table BB-IV-4 (*** percent in 1997, *** percent in 1998, and *** percent in January-September 1999).

[208] CR/PR at Table BB-IV-5.

[209] CR/PR at Table BB-IV-4; Confidential Staff Report from First Reviews at Table BB-IV-4.

[210] CR/PR at Table BB-IV-11.

[211] CR/PR at Table BB-IV-5.

[212] CR/PR at Table BB-I-1.

[213] CR/PR at Table BB-I-1.

[214] CR/PR at Table BB-I-1.

[215] CR/PR at Table BB-I-1.

[216] CR/PR at Table BB-IV-1.

[217] CR/PR at Table BB-IV-6. The available data is from one producer, SKF Industrie. CR at BB-IV-25, PR at BB-IV-15. SKF also reported that ***. CR at BB-IV-25, PR at BB-IV-15.

[218] CR/PR at Table BB-IV-4. In the first review, they were steady at approximately *** percent. Confidential Staff Report from First Reviews at Table BB-IV-5.

[219] CR/PR at Table BB-IV-4.

have accounted for about *** of all shipments during the period of review.[220] Italy is the fourth largest exporter of ball bearings in the world.[221] Total exports of subject BBs from Italy decreased irregularly from their high in the review period of $*** in 2000 to $*** in 2002, before increasing to levels comparable to 2000 levels in 2005 ($***).[222]

Given the conditions of competition in the U.S. BB market, the volume of exports from Italy to the United States under the order's discipline, the size of the Italian industry and its available capacity notwithstanding declines from the first review period, and the export orientation of the Italian industry, we do not find that subject imports from Italy would be likely to have no discernible adverse impact on the domestic industry if the order is revoked.

iv. Japan

No party argues that subject imports from Japan would have no discernible adverse impact if the order is revoked. Subject imports from Japan were $200 million in 1985 and $196.1 million in 1987.[223] They have continued to supply the U.S. market in the years since the order was imposed, and had a value of $351.7 million in 1998. During the period of the second review, subject imports from Japan fluctuated from a high of $277.5 million in 2000 to $191.4 million in 2003.[224] In 2005, they had a value of $253.4 million.[225] By far, subject imports of BBs from Japan accounted for the largest share of total apparent U.S. consumption, representing between 7.7 percent in 2003 and 9.6 percent in 2000 during the period of review, with a 9.2 percent share in 2005.[226] Subject imports from Japan accounted for approximately one quarter of the value of total U.S. imports of BBs during the period of review.[227]

Reported production capacity for subject BBs from Japan decreased from 1.4 billion units in 2001 to 975.2 million units in 2005.[228] Capacity utilization has fallen overall during the period of review from 102.4 percent in 2000 to 99.0 percent in 2005.[229]

The BB industry in Japan remains export-oriented, with total exports accounting for between 31.5 percent and 39.9 percent of total shipments, in 2005 and 2000, respectively.[230] Exports to the United States accounted for between 2.5 percent in 2002 and 2003 and 2.8 percent in 2005 of all shipments during the period of review.[231] Japan is the largest exporter of ball bearings in the world.[232] Total exports of subject BBs from Japan fluctuated between $658.9 million and $885.8 million during the period of review, the largest total exports of subject BBs of any subject country.[233]

---

[220] CR/PR at Table BB-IV-4.

[221] CR/PR at Table BB-IV-11.

[222] CR/PR at Table BB-IV-6.

[223] CR/PR at Table BB-I-1.

[224] CR/PR at Table BB-I-1.

[225] CR/PR at Table BB-I-1.

[226] CR/PR at Table BB-I-1.

[227] CR/PR at Table BB-IV-1 (from a high of 29.4 percent at the beginning of the period to 23.2 percent in 2004, and 25.1 percent in 2005).

[228] CR/PR at Table BB-IV-7.

[229] CR/PR at Table BB-IV-7.

[230] CR/PR at Table BB-IV-7.

[231] CR/PR at Table BB-IV-7.

[232] CR/PR at Table BB-IV-11.

[233] CR/PR at Table BB-IV-7.

Given the conditions of competition in the U.S. BB market, the volume of exports from Japan to the United States under the order's discipline, the size of the Japanese industry notwithstanding apparent recent capacity declines and high capacity utilization rates, and the export orientation of the Japanese industry, we do not find that subject imports from Japan would be likely to have no discernible adverse impact on the domestic industry if the order is revoked.

v. Singapore[234] [235]

Subject imports from Singapore were $21.6 million in 1985 and $22.1 million in 1987.[236] They have maintained a presence in the U.S. market since the order was imposed, and their value was $42.7 million in 1998. However, subject imports from Singapore are the only subject imports that demonstrated a steady decline during the period of review, in absolute and relative terms. They totaled $35 million in 2000 and, by the end of the period, were $3.5 million.[237] During the first period of review, they accounted for between 1.3 percent and 1.4 percent of U.S. consumption by value; in 2005, they accounted for 0.1 percent of U.S. consumption, down from 1.2 percent in the beginning of the period.[238] As a share of total U.S. imports of BBs by value, subject imports from Singapore had declined to 0.3 percent in 2005.[239] Additionally, Singapore Respondents have argued that this steady decline in the volume of subject imports from Singapore occurred despite Singapore having margins and cash deposit rates below 2 percent for most of the period of review, based on the administrative reviews conducted by Commerce. We find these arguments supported by the record.[240]

Moreover, the presence of subject imports from Singapore in the U.S. market is almost entirely of non-precision BBs under 30 mm in diameter – miniature bearings.[241] The industry in Singapore cannot produce BBs in excess of 30 mm in outer diameter and thus, unlike other subject foreign industries and the domestic industry, cannot supply a customer with a full product range of BBs.[242] Miniature bearings constituted only approximately 4.5 percent of domestic BB shipments during the last three years of the review period.[243] The data also show an irregular decline in domestic shipments of miniature BBs.[244]

---

[234] Vice Chairman Aranoff and Commissioner Hillman find it unnecessary to reach the issue of no discernible impact for subject imports from Singapore because they decline to cumulate such imports on the basis of differences in conditions of competition, as discussed below.

[235] Commissioner Lane does not join this section. She finds that the presence of imports from Singapore, albeit at lower levels, after the order was imposed, the capacity of the industry in Singapore, and the high degree of export orientation for the production from Singapore, indicate that there would be a discernible adverse impact on the domestic industry if the order is revoked.

[236] CR/PR at Table BB-I-1.

[237] CR/PR at Table BB-I-1.

[238] CR/PR at Table BB-I-1.

[239] CR/PR at Table BB-IV-1.

[240] See CR/PR at Table BB-I-7; Singapore Respondents' Prehearing Brief at 15-17. NMB/Pelmec accounts for all subject BB production in Singapore and all exports of subject BBs to the United States. CR at BB-IV-34, PR at BB-IV-19-20.

[241] CR at BB-IV-34, PR at BB-IV-19-20.

[242] Singapore Respondent's Posthearing Brief, Response to Chairman Pearson's Question at 2.

[243] Staff Table 2.

[244] Staff Table 2. These declines are consistent with Singapore Respondents' contention that imports from China are increasingly dominating this part of the U.S. market. See, e.g., Singapore Respondents' Prehearing Brief at 21-22.

Competition with BBs from Singapore in this size range and in the likely volumes evidenced by current trends would not likely have a discernible adverse impact on the domestic industry as a whole.[245]

The average unit values ("AUVs") of subject imports from Singapore tend to confirm that these BBs are concentrated in a much different segment of the BB market than the domestic like product and are likely to have no discernible adverse impact on the domestic industry as a whole.[246] For example, AUVs for subject imports from Singapore ranged from $0.43 to $0.90 during the period of review, and were $0.90 in 2005.[247] AUVs for domestically produced BBs ranged from $6.10 in 2000 to $9.40 in 2005.[248]

Although reported production capacity for subject BBs from Singapore rose overall by *** percent, from *** units in 2000 to *** units in 2005, capacity utilization was above *** percent for each year except 2001 and 2002.[249]

The BB industry in Singapore remains export-oriented, with exports accounting for between *** percent (2002) and *** percent (2005) of total shipments.[250] The United States has emerged as one of the top ten export destinations for all subject countries but Singapore.[251] Exports to the United States from Singapore accounted for *** percent of all shipments in 2000, but declined to *** percent of total shipments in 2005.[252] Exports to the United States during the first review accounted for *** of all

---

[245] Domestic interested parties argue that we should consider the impact on the domestic industry that produces miniature BBs to assess injury, arguing that "miniature ball bearings accounted for over 10 percent or more of U.S. domestic consumption of miniature ball bearings in most years." Domestic Interested Parties' Posthearing Brief, Answers to Commission Questions, Lane at 16; see also id. at 10. We disagree. We are required by statute to consider the domestic industry as a whole. See 19 U.S.C. § 1677(4); Timken Co. v. United States, 321 F. Supp.2d 1361, 1367 n.2 (Ct. Int'l Trade 2004). See also Calabrian Corp. v. United States, 794 F. Supp. 377, 385-86 (Ct. Int'l Trade 1992) ("This Court has repeatedly affirmed ....that 'Congress intended the ITC determine whether or not the domestic industry (as a whole) has experienced material injury due to the imports. This language defies the suggestion that the ITC must make a disaggregated analysis of material injury,'" quoting Copperweld Corp. v. United States, 682 F. Supp. 552, 569 (Ct. Int'l Trade 1988). Neither domestic interested parties nor any other party has made any arguments that miniature ball bearings should be defined as a separate domestic like product.

[246] AUVs are of limited utility when there are significant product mix issues, but the magnitude of the discrepancy as it relates to Singapore affords evidence of the limited competition that exists between the domestic industry as a whole and subject BBs from Singapore.

[247] CR/PR at Table BB-IV-1.

[248] CR/PR at Table BB-III-3.

[249] CR/PR at Table BB-IV-8.

[250] CR/PR at Table BB-IV-8.

[251] CR at BB-IV-45, PR at BB-IV-24.

[252] CR/PR at Table BB-IV-8. Domestic interested parties have argued that NMB/Pelmec increased its imports to the United States from Thailand once the countervailing duty on imports from Thailand was lifted in 1996, and decreased its imports from Singapore. They contend that this *** is revoked. Domestic Interested Parties' Posthearing Brief, Exh. Lane at 11-12, Chart 1. However, that domestic interested parties' chart is based on quantity, not value, and the Commission has consistently relied on value in analyzing subject import trends with respect to ball bearings. Value data for imports shows that BB imports to the United States from Thailand generally fell after the countervailing duty order was lifted in 1996, and only began to increase approximately four years later in 2002. Singapore Respondents' Posthearing Brief at 11. However, BB imports from Thailand did not increase dramatically between 2000 and 2005, and in fact were lower in 2005 than in any year between 1995 and 2000. In contrast, subject imports from Singapore have decreased by value steadily and significantly since 1995, including during the current review period. Thus, the value data do not show any substantial shift in BB imports from Singapore to Thailand.

shipments from Singapore.[253] Increasingly, the *** of shipments from Singapore are exported to Asian markets, such as ***.[254] Singapore is the sixth largest exporter of ball bearings in the world,[255] but total exports of subject BBs from Singapore declined from $*** in 2000 to $*** in 2005, and subject producers and exporters in Singapore are focusing on other markets besides the U.S. market.[256]

Based on the declining volumes of exports from Singapore to the United States, the foreign industry's production of miniature bearings, which compete in small and declining quantities with the domestic product, the magnitude of the differences in the AUVs between subject imports and the domestic product (further reflective of the different product mix), and foreign capacity utilization that exceeds *** percent and is increasingly directed to production for Asia, we find that subject imports from Singapore are likely to have no discernible adverse impact on the domestic industry if the antidumping duty order were revoked.

vi. United Kingdom

Subject imports from the United Kingdom were $11.9 million in 1985 and $13.6 million in 1987.[257] They have continued to supply the U.S. market in the years since the order was imposed, and had a value of $14.9 million in 1998. During the period of the second review, subject imports from the United Kingdom ranged in value from $8.1 million in 2002 to $11.8 million in 2000.[258] In 2005, they had a value of $11.3 million.[259] Their share of U.S. consumption during the period of review was consistently 0.3 percent to 0.4 percent,[260] and their share of the value of total U.S. imports of BBs was at or just above 1.0 percent.[261]

Reported production capacity for subject BBs in the United Kingdom rose from 2000 to 2001 and then declined *** percent from 2001 (*** units) to 2005 (*** units).[262] Capacity utilization increased from approximately *** percent to *** percent in the early part of the period of review to *** percent to *** percent in the latter part.[263]

The BB industry in the United Kingdom remains reliant on exports, with exports having accounted for *** percent of all shipments in the beginning of the period and approximately *** percent at the end of the period, although the *** of such exports were within the EU.[264] Exports to the United States consistently accounted for *** to *** percent of all shipments.[265] The United Kingdom is the tenth

---

[253] Confidential Staff Report from First Reviews at BB-IV-8.

[254] CR/PR at Table BB-IV-8; ***.

[255] CR/PR at Table BB-IV-11.

[256] CR/PR at Table BB-IV-8.

[257] CR/PR at Table BB-I-1.

[258] CR/PR at Table BB-I-1.

[259] CR/PR at Table BB-I-1.

[260] CR/PR at Table BB-I-1.

[261] CR/PR at Table BB-I-1.

[262] CR/PR at Table BB-IV-9.

[263] CR/PR at Table BB-IV-9.

[264] CR/PR at Table BB-IV-9.

[265] CR/PR at Table BB-IV-9 (*** percent in 2004 and *** percent in 2005).

largest exporter of ball bearings in the world.[266] Total exports of subject BBs from the United Kingdom increased from $*** in 2000 to $*** in 2005.[267] [268]

Given the conditions of competition in the U.S. BB market, the consistent volume of exports from the United Kingdom to the United States under the order's discipline, notwithstanding the industry's reported declines in capacity, the size of the UK industry and available capacity, and the export orientation of the UK industry, we do not find that subject imports from the United Kingdom would be likely to have no discernible adverse impact on the domestic industry if the order is revoked.

c. Likelihood of a Reasonable Overlap of Competition

Domestic interested parties argue that a reasonable overlap of competition among subject imports and the domestic like product is likely based on consideration of the four factors traditionally considered by the Commission.[269] European Respondents argue that conditions have changed since the first reviews and that there is insufficient evidence of a reasonable overlap of competition to warrant cumulating subject imports from these respective subject countries.[270] Based on our conclusions respecting subject imports from Singapore – either that they would be likely to have no discernible adverse impact on the domestic industry if the order is revoked (discussed above) or that they face different conditions of competition warranting our declining to exercise discretion to cumulate them with subject imports from the other five countries (discussed below), we find it unnecessary to decide the issue of reasonable overlap of competition with respect to subject imports from Singapore.[271]

i. Fungibility

The record indicates that the vast majority of purchasers consider BBs produced in France, Germany, Italy, Japan, and the United Kingdom to be substitutable for domestically produced BBs. Ten of 13 purchasers reported that BBs from France were "always" or "frequently" interchangeable with U.S. produced BBs.[272] Sixteen of 19 purchasers reported the same conclusions in comparing BBs from Germany with those from the United States; 10 of 12 reported the same conclusions in comparing BBs from Italy with those from the United States; 23 of 29 reported the same conclusions in comparing BBs

---

[266] CR/PR at Table BB-IV-11.

[267] CR/PR at Table BB-IV-9.

[268] In assessing the likely impact of subject imports from the United Kingdom in his analysis, Chairman Pearson found it appropriate to take into account the widespread underselling by subject imports from the United Kingdom that is likely to continue if the order is revoked. CR/PR at Table BB-V-2 (45 out of 48 pricing comparisons). He notes that he has the discretion to take into account a variety of factors, depending on the record before him, in any particular review.

[269] See, e.g., Domestic Interested Parties' Prehearing Brief at 16-17.

[270] See, e.g., European Respondents' Prehearing Brief at 59-69.

[271] Commissioner Lane finds that there is a reasonable overlap of competition among the subject imports from all six countries, including Singapore, and between those subject imports and the domestic like product, based on the Commission's traditional four factor analysis: fungibility, common or similar channels of distribution, geographic markets and simultaneous market presence. In the original investigations the Commission found that there was at least a reasonable overlap of competition between the imports of BBs from Singapore, other subject countries and the domestic like product. The Commission noted in the original investigations and the first reviews that the BB market represents a continuum of products, and that although competition among bearings of different sizes and ratings may be limited, it exists among all imports and the domestic like product. USITC Pub. 3309 at 35. Commissioner Lane finds that the record in these reviews continues to indicate a reasonable overlap of competition.

[272] CR/PR at Table BB-II-4.

from Japan with those from the United States; and 11 of 14 reported the same conclusions in comparing BBs from the UK with those from the United States.[273]

The vast majority of purchasers similarly reported interchangeability among the subject imports from France, Germany, Italy, Japan, and the United Kingdom.[274] Country of origin, as in the first reviews, was rarely a basis for BB purchasing decisions.[275]

Purchasers made comparisons on a number of factors between U.S.-produced ball bearings and subject imports from France, Germany, Italy, Japan, and the United Kingdom and generally found them comparable.[276] Quality was identified by purchasers as the most important factor when selecting a supplier. Twenty-one responding purchasers ranked quality first, while 11 ranked it second, and 5 ranked it third.[277] A majority of purchasers found quality to be comparable between the U.S.-produced BBs and BB subject imports and among BB subject imports themselves. With respect to the "quality meets industry standards" factor, all 8 purchaser responses indicated that BBs from France, Italy, and the UK were comparable to domestically produced BBs, 17 out of 19 purchasers reported that BB subject imports from Japan were comparable to domestically produced BBs, and 9 out of 11 purchasers reported that BBs from Germany were comparable to domestically produced BBs.[278] With respect to the "quality exceeds industry standards" factor, all 5 purchaser responses indicated that BBs from France and the United Kingdom were comparable to domestically produced BBs, 8 out of 10 purchasers reported that BBs from Germany were comparable to domestically produced BBs, and 15 out of 18 reported that BBs from Japan were comparable to domestically produced BBs.[279]

Purchasers also compared the domestically produced BBs and subject imports from the five subject countries in terms of product range.[280] Two of four purchasers reported that BBs from France were comparable to U.S.-produced BBs. Seven of 11 reported that BBs from Germany were comparable to U.S.-produced BBs. One of the three responding purchasers reported that BBs from the United Kingdom were comparable to U.S.-produced BBs, with the remaining two reporting that U.S.-produced BBs were superior. Seventeen of 19 reported that BBs from Japan were comparable to U.S.-produced BBs. The only responding purchaser reported that BBs from Italy were comparable to U.S.-produced BBs.[281] The available purchaser comparisons among BBs from subject countries also showed comparability in terms of product quality and product range.[282]

ii. Channels of Distribution

Both domestically produced BBs and BB subject imports are sold to both OEMs and distributors and to other aftermarket customers. In 2005, U.S. producers shipped 89.5 percent of their shipments of BBs to end users and OEMs with the remaining 10.5 percent shipped to distributors or aftermarket

---

[273] CR/PR at Table BB-II-4.

[274] CR/PR at Table BB-II-4.

[275] CR at BB-II-29, PR at BB-II-20.

[276] CR/PR at Table BB-II-3.

[277] CR/PR at Table BB-II-1.

[278] CR/PR at Table BB-II-3.

[279] CR/PR at Table BB-II-3.

[280] BBs are sold as both standard and customized product in the United States by U.S. producers and importers of subject merchandise from France, Germany, Italy, Japan, and the United Kingdom. CR at BB-I-40, PR at BB-I-35; CR/PR at Table BB-I-10.

[281] CR/PR at Table BB-II-3.

[282] CR/PR at Table BB-II-3.

customers.[283] In 2005, importers shipped *** percent of subject imports from France to end users and OEMs with the remaining *** percent shipped to distributors or aftermarket customers; 73.0 percent of subject imports from Germany to end users and OEMs with the remaining 27.0 percent shipped to distributors or aftermarket customers; *** percent of subject imports from Italy to end users and OEMs with the remaining *** percent shipped to distributors or aftermarket customers; 83.1 percent of subject imports from Japan to end users and OEMs with the remaining 16.9 percent shipped to distributors or aftermarket customers; and *** percent of subject imports from the UK to end users and OEMs with the remaining *** percent shipped to distributors or aftermarket customers.[284]

iii. Simultaneous Presence in Market and Geographic Overlap

Subject imports from France, Germany, Italy, Japan, and the UK have been present continuously in the U.S. market and have been sold throughout the U.S. market.[285]

iv. Conclusion

Therefore, based on the traditional four competition factors that the Commission considers, we conclude that subject imports from France, Germany, Italy, Japan, and the United Kingdom likely would be sufficiently fungible, move in the same channels of distribution, and compete simultaneously in the same geographic market if the orders were revoked. Consequently, we conclude that there would likely be a reasonable overlap of competition between subject imports and the domestic like product, and among subject imports themselves, if the orders were revoked.

d. Other Considerations[286]

In determining whether to exercise our discretion to cumulate the subject imports from the six countries, we assess whether the subject imports from certain countries are likely to compete under similar or different conditions in the U.S. market.

France, Germany, Italy, Japan, and the United Kingdom. We do not find differences in the conditions of competition among subject imports from France, Germany, Italy, Japan, and the United Kingdom, or in conditions of competition between subject imports and domestic product, significant enough for us not to exercise our discretion to cumulate subject imports from these five subject countries.

Singapore.[287] However, several factors indicate that subject imports from Singapore will likely compete in the U.S. market under significantly different conditions of competition from subject imports from the other five countries, and from the domestic product, if the antidumping duty order on imports from Singapore is revoked. In particular, as elaborated below, the volume trends for subject imports from Singapore differed from other subject countries, the product mix of subject imports from Singapore differs substantially from that of other subject imports and domestic shipments, and subject imports from

---

[283] CR/PR at Table BB-I-11.

[284] CR/PR at Table BB-I-11.

[285] CR/PR at Table BB-I-15 and BB-II-2.

[286] Commissioner Lane does not join in this section. She does not find any significant or compelling other considerations that would lead her to conclude that the conditions of competition related to subject imports from Singapore are so dissimilar from the conditions of competition affecting subject imports from the other five countries that she should exercise her discretion to not cumulate all subject imports.

[287] Chairman Pearson and Commissioner Koplan base their decision not to cumulate on their findings regarding no discernible adverse impact with respect to Singapore, but concur in the following analysis of other considerations regarding Singapore.

Singapore sold in greater quantities to *** than other sources. Moreover, the Singapore industry, unlike the other foreign industries, has no excess capacity. For these reasons, we decline to exercise our discretion to cumulate subject imports from Singapore with other subject imports.

Subject imports from Singapore followed significantly different trends than other subject imports during the period of review in terms of volume and share of U.S. consumption (as measured by value). While the volume and share of U.S. consumption of other subject imports have fluctuated or stayed level, subject imports from Singapore declined steadily during the period, from $35.0 million in 2000 to $3.5 million in 2005, or 90.1 percent.[288] This decline occurred despite Singapore having antidumping duty margins and cash deposit rates below 2 percent for most of the period of review.[289] Subject imports from Singapore constituted only 0.1 percent of U.S. consumption in 2005, by far the smallest share of any subject imports.[290] The U.S. market is a top-ten export destination for all subject countries, even under the discipline of the antidumping duty orders, except Singapore.[291]

Nearly all subject imports from Singapore consisted of only small and miniature bearings between 9 and 30 mm in diameter; the industry is largely limited to producing this size range.[292] In contrast, miniature bearings accounted for only between 2.6 percent and 16.2 percent of subject imports from other countries (by value) in 2005, and between 4.4 percent and 6.3 percent of domestic producers' domestic shipments (by value).[293] The distinction in product types between Singapore on the one hand and other subject sources and domestic product on the other is borne out by AUVs. The AUVs for Singapore's shipments ranged between $*** and $***, whereas the AUVs for other subject countries' shipments and the domestic industry's shipments were much higher.[294] Similarly, the AUVs for subject imports from Singapore is well below that for subject imports from other countries.[295]

The channels of distribution for subject imports from Singapore also differ from other subject countries. Subject imports from Singapore are sold predominantly to ***. With a ratio of sales to *** that ranged from *** percent to *** percent during the period of review, subject imports from Singapore sold in the *** channel significantly less than any other subject country.[296]

Finally, while other subject foreign industries have varying degrees of excess capacity, capacity utilization in Singapore has been above *** percent since 2003.[297]

Based on the combination of factors described, we decline to exercise our discretion to cumulate subject imports from Singapore and exercise our discretion to cumulate subject imports from the other five countries, France, Germany, Italy, Japan, and the UK.

---

[288] CR/PR at Tables BB-I-1 & C-2.

[289] CR/PR at Table BB-I-7.

[290] CR/PR at Table BB-I-1.

[291] CR/PR at BB-IV-45.

[292] Singapore Respondents' Posthearing Brief, Response to Chairman Pearson's Question at 2; Hearing Tr. at 356 (Morgan).

[293] Staff Table 2.

[294] CR/PR at Tables BB-III-3 & BB-IV-4-IV-9.

[295] CR/PR at Table BB-IV-1.

[296] CR/PR at Table BB-I-11.

[297] CR/PR at Tables BB-IV-4-BB-IV-9.

3. Subject BB imports from France, Germany, Italy, Japan, and the United Kingdom

a. Conditions of Competition

The following conditions of competition are relevant to our analysis of the BB orders under review.

Demand

In the first five-year reviews, the Commission found that U.S. demand for BBs is driven by the demand for the end-use products that use BBs.[298] This continues to be true. As in the first reviews, BBs are used in a wide range of products and industries including automotive, construction, manufacturing, aerospace, medical, and mining industries.[299] The Commission also found in the first reviews that BBs are typically sold either to original equipment manufacturers ("OEMs") or to aftermarket distributors.[300] This also continues to be true. In 2005, U.S. producers shipped 89.5 percent of their U.S. shipments of BBs to end users/OEMs, and the remaining 10.5 percent to distributors/aftermarket customers.[301] In 2005, *** percent of U.S. shipments of subject imports were to end users/OEMs and the remaining *** percent were to distributors/aftermarket customers.[302]

In the first five-year reviews, the Commission found that demand for BBs had grown considerably since the original investigations, approximately doubling between 1987 and 1998, although it was relatively flat toward the end of the first review period.[303] During this review period, apparent U.S. consumption of BBs, measured by value, was 5.6 percent lower in 2005 than in 2000, although it fluctuated on an annual basis. Apparent U.S. consumption of BBs decreased from $2.91 billion to $2.58 billion in 2001, increased slightly to $2.59 billion in 2002, dropped to $2.48 billion in 2003, and then recovered somewhat during the next two years to $2.59 billion in 2004 and $2.74 billion in 2005.[304]

U.S. demand for BBs tends to follow general economic conditions.[305] U.S. GDP has grown by over six percent in 2004 and 2005, and the OECD forecasts similar near-term growth.[306] Most industry participants expect stable to increasing demand for BBs in the near future. Specifically, strong near-term growth is expected in the automotive industry, the primary user of BBs, as well as in industrial markets. However, little to no growth is expected in the heavy truck market as the demand for heavy trucks normalizes after several years of strong growth.[307]

Given the wide variety of customers and the multitude of distinct industries for which BBs are used, we find that this industry is not characterized by a regular and measurable business cycle that might be characteristic of other industries. Whereas the various industries that use BBs in their end use

---

[298] USITC Pub. 3309 at 57.

[299] USITC Pub. 3309 at 57; CR at BB I-38, PR at BB-I-33.

[300] USITC Pub. 3309 at 58.

[301] CR/PR at Table BB-I-11.

[302] Derived from CR/PR at Table BB-I-11.

[303] USITC Pub. 3309 at 57.

[304] By quantity, apparent U.S. consumption for BBs decreased overall by 18.8 percent during the period examined. Apparent U.S. consumption fell from 1.0 billion BBs in 2000 to 887.9 million BBs in 2001 to 880.7 million BBs in 2002, to 785.8 million BBs in 2003, and then increased to 843.9 million BBs in 2004, and dropped to 816.0 million BBs in 2005. CR/PR at Table C-2.

[305] CR at BB-II-11-12, PR at BB-II-7.

[306] CR at BB-II-11-12, PR at BB-II-7.

[307] CR at BB-II-14-16, PR at BB-II-9-10.

applications may each be characterized by a specific business cycle, BB producers respond to several different end-user industries and their individual business cycles. The diversity of customers and industries that use BBs limits the effects of upturns or downturns in demand from particular customers or other user industries, particularly to the extent that, at any given time, some BB end-user industries are likely at different positions in their business cycles than other BB end-user industries.

Supply

In many respects, the structure of the domestic BB industry remains comparable to past periods examined. As in the first reviews, there is no single dominant U.S. producer of BBs.[308] *** remains the largest single domestic BB producer, accounting for *** percent of U.S. shipments by value in 2005.[309] However, four U.S. producers (Delphi Automotive Systems, NSK, SKF, and Timken) continue to represent the majority of domestic BB production, accounting for *** percent of U.S. BB production by value in 2005.[310]

In the first reviews, the Commission found that the domestic BB industry included production facilities owned by large multinational producers that have facilities in several nations.[311] This trend has continued in these reviews. In 1998, 49.0 percent of all U.S.-produced BBs were produced by foreign-owned firms; by 2005, 56.9 percent of all U.S.-produced BBs were produced by foreign-owned firms.[312]

---

[308] While 36 BB producers responded to the Commission's questionnaires in the first review, the following 21 U.S. BB producers responded to the Commission's questionnaires in these reviews, with their respective shares of reported U.S. shipments (by value) in 2005 noted in parentheses: Atlantic Bearing Co., Inc. (*** percent); Delphi Automotive Systems LLC (*** percent); Emerson Power Transmission Corp. (*** percent); Hoover Precision Products, Inc. (*** percent); Koyo Corp. of USA (*** percent); Nachi Technology, Inc. (*** percent); Nakanishi Mfg. Corp. (*** percent); New Hampshire Ball Bearings, Inc. (*** percent); NN, Inc. (*** percent); NSK Corp. (*** percent); NSK-AKS Precision Ball Co. (*** percent); NTN-USA Corp. (*** percent); Pacamor/Kubar Bearings (*** percent); Rexnord Bearing Group (*** percent); Rockwell Automation Power Systems (*** percent); Saint-Gobain Ceramics & Plastics, Inc./Norton Advanced Ceramics (*** percent); Schaeffler Group (*** percent); SKF USA (*** percent); The Timken Co. (*** percent); Triangle Mfg. Co. (*** percent); and Trostel, Inc. (*** percent). CR/PR at Table BB-I-12.

In its posthearing brief, SKF points out that two domestic BB producers, RBC Bearings, Inc. ("RBC") and Kaydon Corp. ("Kaydon"), did not respond to the Commission's questionnaires. Without providing any explanation for its calculation, SKF estimates that RBC and Kaydon may have accounted for as much as $228 million in U.S. sales of BBs in 2005. SKF Posthearing Brief at 1-2. In the first reviews, RBC and Kaydon accounted for a relatively small share of U.S. BB production, with RBC representing *** percent of total U.S. shipments by value in 1998 and Kaydon representing *** percent of total U.S. shipments by value in 1998. First Reviews CR/PR at BB-I-1. There is nothing in the record in these second reviews which suggests that, in terms of their size relative to the domestic industry, RBC and Kaydon have increased significantly since the first reviews. Moreover, in its questionnaire response, RBC estimated that it had approximately $*** in U.S. sales of BBs in 2005. See RBC Questionnaire Response. However, U.S. producers' total U.S. shipments (by value) in 2005 totaled $1.73 billion. Finally, the data on which SKF relies are not limited to BBs, but instead encompass a range of products which are not covered by the domestic like product.

[309] CR/PR at Table BB-I-12. In 1998, *** accounted for *** percent of U.S. shipments of BBs and parts by value. CR/PR at Table BB-I-11.

[310] CR/PR at Table BB-I-12. In 1998, NTN, Delphi, SKF, Torrington, and NSK accounted for more than *** percent of U.S. shipments of BBs and parts by value. First Review CR at BB-I-35.

[311] USITC Pub. 3309 at 59.

[312] CR at BB-I-58, PR at BB-I-48.

As in the first reviews, many domestic producers own or are affiliated with BB producers in markets outside the United States.[313]

There has been some consolidation of the domestic BB industry since the first reviews. Two small BB producers have closed their production facilities (American Roller Bearings Industries, Inc. and Nucor Bearing Products).[314] Some U.S. producers have relocated production lines overseas (***), closed BB production plants (NN, NTN, SKF, and Timken), and another domestic producer, Timken, has stopped doing business in a certain area of BB production, sold part of its BB production business, and ***.[315] Two other domestic producers (Koyo and NSK) have added U.S.-based production lines in order to produce more customized bearing products.[316]

The record shows that domestic BB capacity declined throughout the period examined in these reviews, falling by 24.6 percent between 2000 and 2005, while domestic BB production fell steadily by 37.9 percent during the same period.[317] U.S. shipments by domestic BB producers also fell during the period examined in these reviews. By value, U.S. shipments by domestic producers decreased from $2.0 billion in 2000 to $1.7 billion in 2005.[318] Numerous purchasers stated that one factor affecting the supply of BBs since the start of the period of review is a sharp increase in raw material costs (steel, natural gas, etc.) which have led to a decrease in the availability of BBs.[319] Additionally, while BB purchasers' questionnaires were somewhat mixed on the question of whether they had experienced supply shortages and/or been placed on allocation,[320] domestic BB producers (Timken, Emerson, and Pacamor Kubar) stated at the hearing that they were not aware of any instances of BB customers on allocation.[321]

The percentage of apparent U.S. consumption supplied by the domestic BB industry declined irregularly during the period of review. The domestic industry's share of apparent U.S. consumption, in value terms, dropped from 67.5 percent in 2000 to 63.2 percent in 2005.[322] The market share of cumulated subject imports increased slightly overall during the period of review from 12.9 percent in 2000 to 13.2 percent in 2005.[323] The market share of nonsubject imports increased each year of the period of investigation, from 18.4 percent in 2000 to 23.6 percent in 2005.[324]

---

[313] CR/PR at Table BB-I-13.

[314] CR/PR at Table BB-I-13.

[315] CR/PR at Overview Table 3.

[316] CR/PR at Overview Table 3.

[317] CR/PR at Table BB-III-1.

[318] By quantity, U.S. shipments by domestic producers dropped from 299,253 BBs in 2000 to 174,027 BBs in 2005. CR/PR at Table BB-I-1.

[319] CR at BB-II-3, PR at BB-II-2.

[320] In the Commission's questionnaires for these reviews, purchasers were asked if they had experienced a supply shortage of any certain bearings and/or been placed on allocation. Twenty-two BB purchasers answered "no," although three of those indicated that there had been longer lead times. Twenty-three BB purchasers answered "yes," although eleven of those stressed shortages of TRBs rather than BBs. CR at BB-II-4, PR at BB-II-3.

[321] Hearing Tr. at 83-85.

[322] CR/PR at Table C-2.

[323] CR/PR at Table C-2.

[324] CR/PR at Table C-2.

Substitutability

In the first reviews, the Commission found that "[t]here is a significant degree of substitutability between domestically produced BBs and subject imports."[325] In these reviews, 70 out of 77 responding purchasers and 81 out of 125 responding importers considered domestically produced BBs and the subject merchandise to be "always" or "frequently" interchangeable.[326] *** also reported that major foreign producers and distributors publish "interchange" charts showing how each company's bearings can substitute for other bearings, including U.S.-made bearings.[327] Both domestically produced BBs and subject imports are sold to OEMs and distributors and to other aftermarket customers.[328]

Some purchasers and importers claimed that domestic product and subject imports were not interchangeable because subject BBs tended to be of lower quality and did not meet OEM certification or qualification requirements. However, 42 purchasers reported that subject BBs "always" or "usually" meet minimum quality specifications while only seven purchasers reported that subject BBs "sometimes" meet minimum quality specifications.[329] Thirty-nine purchasers reported that they required certification or qualification of their suppliers for 80 percent or more of their purchases, one purchaser required certification for 25 percent of purchases, and eleven purchasers reported that they did not require certification for suppliers.[330] However, 42 purchasers reported that no suppliers had failed to receive certification while just 5 purchasers reported instances of suppliers failing to receive certification for quality reasons.[331] Additionally, 15 producers and 39 importers reported that they had never been unable to qualify any type of BBs, while only 3 producers and 5 importers reported qualification problems.[332]

Although bearings are often referred to as "standard" and "custom" within the industry, the parties to these reviews have not been able to agree upon commonly accepted industry definitions of these terms.[333] In these reviews, we find that there is not any clear dividing line between custom versus standard BBs. Some BBs are "custom" when first produced for a purchasers' particular specifications and then later become "standard" after a period of time. In other words, once a producer has developed a

---

[325] USITC Pub. 3309 at 59.

[326] Thirty-six purchasers and 45 importers found BBs from the cumulated subject countries to be "always" interchangeable with U.S.-produced BBs, 34 purchasers and 36 importers found BBs from the various subject countries to be "frequently" interchangeable with U.S.-produced BBs, 12 purchasers and 27 importers found BBs from the various subject countries to be "sometimes" interchangeable with U.S.-produced BBs, and only 5 purchasers and 13 importers found BBs from the various subject countries to be "never" interchangeable with U.S.-produced BBs. CR/PR at Table BB-II-4.

[327] CR at BB-II-30, PR at BB-II-21.

[328] In 2005, U.S. producers shipped 89.5 percent of their shipments of BBs to end users and OEMs with the remaining 10.5 percent shipped to distributors or aftermarket customers. In 2005, *** percent of subject imports from the United Kingdom were shipped to end users and OEMs with the remaining *** percent shipped to distributors or aftermarket customers; 83.1 percent of subject imports from Japan were shipped to end users and OEMs with the remaining 16.9 percent shipped to distributors or aftermarket customers; 73.0 percent of subject imports from Germany were shipped to end users and OEMs with the remaining 27.0 percent shipped to distributors or aftermarket customers; *** percent of subject imports from France were shipped to end users and OEMs with the remaining *** percent shipped to distributors or aftermarket customers; and *** percent of subject imports from Italy were shipped to end users and OEMs with the remaining *** percent shipped to distributors or aftermarket customers. CR/PR at Table B-11.

[329] CR at BB-II-27, PR at BB-II-19.

[330] CR at BB-II-28, PR at BB-II-19.

[331] CR at BB-II-28 n.48, PR at BB-II-20 n.48.

[332] CR at BB-II-28, PR at BB-II-20.

[333] CR/PR at Overview-12 to Overview-13; CR at BB-I-38 to BB-I-39, PR at BB-I-34-35.

particular customized bearing, it can produce that bearing in larger quantities, and the bearing becomes standard for that producer, especially in the market for BBs where many of the largest producers are sophisticated multinational firms. Also, the terms "standard" and "custom" may have different meanings for different individual companies.[334]

In these reviews, custom bearings were defined in the Commission questionnaires as those that (1) have a non-catalog number; (2) have a specific drawing number; (3) have a customer-specific part number; or (4) have been otherwise manufactured to a customer's specific order. Standard bearings were defined as all other "off the shelf" bearings. The record in these reviews reflects that substantial proportions of BBs are sold as both standard and customized product in the United States by U.S. producers and subject importers.[335]

In the U.S. market for BBs, so-called "Buy American" requirements are minimal and are limited mainly to the aerospace industry.[336]

We find that the foregoing conditions of competition are likely to prevail for the reasonably foreseeable future and thus provide an adequate basis by which to assess the likely effects of revocation of the orders within the reasonably foreseeable future.

b. Likely Volume of Subject Imports

In its original determinations, the Commission found the volume of subject imports to be both increasing and significant.[337]

In the first reviews, the Commission acknowledged several factors which it stated "on their face" could indicate significant additional subject import volumes upon revocation would be unlikely including the fact that subject imports were significantly higher than during the original investigations, capacity utilization rates in most subject countries were already high, and product shifting was difficult.[338] Despite the presence of these factors, however, the Commission found that a "relatively small increase in the volume of cumulated subject imports would be significant" within the reasonably foreseeable future if the orders were revoked. In so doing, the Commission emphasized that subject imports were entrenched

---

[334] One U.S. purchaser refers to its ***. CR at BB-I-39, PR at BB-I-34.

[335] Based on questionnaire data, in 2005, standard bearings represented 33.1 percent of the value of shipments for U.S. BB producers while custom bearings represented 66.9 percent of the value of their shipments. In 2005, standard bearings represented *** percent of the value of shipments for BB subject imports from France while custom bearings represented *** percent of the value of shipments for BB subject imports from France. In 2005, standard bearings represented 63.4 percent of the value of shipments for BB subject imports from Germany while custom bearings represented 36.6 percent of the value of shipments for BB subject imports from Germany. In 2005, standard bearings represented *** percent of the value of shipments for BB subject imports from Italy while custom bearings represented *** percent of the value of U.S. shipments for BB subject imports from Italy. In 2005, standard bearings represented 48.8 percent of the value of U.S. shipments for BB subject imports from Japan while custom bearings represented 51.2 percent of the value of U.S. shipments for BB subject imports from Japan. In 2005, standard bearings represented *** percent of the value of U.S. shipments for BB subject imports from the United Kingdom while custom bearings represented *** percent of the value of U.S. shipments for BB subject imports from the United Kingdom. CR at BB-I-40, PR at BB-I-35.

[336] Nine producers and 15 importers reported in their questionnaire responses that U.S. defense industries have U.S.-made requirements as specified in the DFAR for BBs, while five producers and 21 importers responded that there were none. One U.S. producer explained that "Buy American" regulations can change annually and, on occasion, may be subject to waivers. Another U.S. producer said that a pending revision of DFAR would remove some of the "Buy American" protections for U.S. BB producers. CR at BB-II-2, PR at BB-II-1.

[337] USITC Pub. 2185 at 68-69.

[338] USITC Pub. 3309 at 61.

in the highest volume portion of the market, demand for BBs was weak during the review period, and any increases in subject import volumes were likely to cause negative price effects.[339]

Despite the orders, cumulated subject imports have maintained a growing and significant presence in the U.S. market during the period examined in these reviews, although possessing just slightly lower market shares than in the first reviews. Subject imports from France, Germany, Italy, Japan, and the United Kingdom accounted for 14.2 percent of U.S. consumption by value in 1998.[340] In 2000, cumulated subject imports for these five countries accounted for 12.9 percent of U.S. consumption by value; by 2005, cumulated subject imports from these five countries had grown (albeit slightly) to represent 13.2 percent of U.S. consumption by value.[341]

Several factors indicate that subject producers from France, Germany, Italy, Japan, and the United Kingdom have the ability and incentive to increase exports to the United States to significant levels if the orders were revoked. Although subject producers' capacity and production have fallen during the review period while capacity utilization has risen,[342] total commercial shipments (by value) by cumulated subject countries increased from $*** in 2000 to $*** in 2005.[343] Moreover, subject producers from these five cumulated countries generally have continued to ship to the United States in significant volumes despite the orders, especially in the latter part of the review period when cumulated subject imports increased by value.[344] The ongoing and significant presence of subject imports in the U.S. market demonstrates the continued importance of the U.S. market to subject producers and further shows that subject imports already have distributors or customers in place for their products.

BB producers in France, Germany, Italy, Japan, and the United Kingdom are highly export-oriented, ranking among the largest BB exporters in the world. In terms of BB global exports, by value, Japan ranked first, Germany ranked second, Italy ranked fourth, France ranked fifth, and the United Kingdom ranked tenth in 2004.[345] By value, total exports for BB producers from these five cumulated

---

[339] USITC Pub. 3309 at 39.

[340] First Review CR/PR at Table BB-IV-1.

[341] By value, cumulated subject imports fell from 12.9 percent of U.S. BB consumption in 2000 to 12.4 percent in 2001 and 11.5 percent in 2002, and then increased during the next three years from 11.7 percent in 2003 to 12.8 percent in 2004 and 13.2 percent in 2005. Staff Table 4.

[342] Subject producers' cumulated capacity dropped from *** BBs in 2000 to *** BBs in 2001, *** BBs in 2002, *** BBs in 2003, and *** BBs in 2004 and 2005. Staff Table 5.

BBs subject producers' production fell from *** BBs in 2000 to *** BBs in 2001, *** BBs in 2002, *** BBs in 2003 and 2004, and *** BBs in 2005. Staff Table 5.

BB subject producers' capacity utilization increased irregularly during the review period, increasing from *** percent in 2000 to *** percent in 2001, dropping to *** percent in 2002, increasing to *** percent in 2003 and *** percent in 2004, and falling slightly to *** percent in 2005. Staff Table 5.

[343] By value, total commercial shipments for the cumulated subject producers increased irregularly during the period examined, falling from $*** in 2000 to $*** in 2001 and 2002; it was then $*** in 2003, $*** in 2004, and $*** in 2005. Staff Table 5.

[344] By value, cumulated subject imports fell from $374.9 million in 2000 to $320.3 million in 2001, $297.3 million in 2002, $288.9 million in 2003, and then increased to $332.0 million in 2004, and $360.8 million in 2005. Staff Table 4.

[345] In 2004, Japan exported $1.3 billion BBs, Germany exported $1.0 billion BBs, Italy exported $703.5 million BBs, France exported $693.0 million BBs, and the United Kingdom exported $223.4 million BBs. CR/PR at Table BB-IV-11. We recognize that the data used to compile Table BB-IV-10 through Table BB-IV-17 represent imports and exports for HTS heading 8482.10 (ball bearings), which are not exactly comparable to the BB imports subject to the scope of the review.

countries increased irregularly from $*** in 2000 to $*** in 2005.[346] In fact, total exports for these five cumulated countries were almost as high as total commercial home market shipments throughout the period examined in these reviews.[347] Since 2003, the value of both total commercial home market shipments and total exports for the cumulated countries have increased.[348]

Moreover, BB producers from the cumulated subject countries maintain a wide and diverse presence in markets throughout Europe, Asia, and the United States, and they have demonstrated the ability to shift exports relatively quickly from one market to another on an annual basis during the period examined in these reviews.[349] The United States is an especially attractive market for subject imports since U.S. prices for BBs generally are higher than in other markets outside the United States.[350] In fact, the United States is the second largest market in the world for BB imports.[351] In light of the export-oriented nature of BB producers from the cumulated subject countries, the ability of BB producers from the cumulated subject countries to shift markets quickly, and the fact that more than 90 percent of purchasers reported that the domestic like product and subject imports are "always" or "frequently" interchangeable, we find that BB subject producers from France, Germany, Italy, Japan, and the United Kingdom have the ability and incentive to increase exports to the United States to significant levels within the reasonably foreseeable future if the orders were revoked.[352] [353]

---

[346] By value, total subject exports for BB producers dropped from $*** in 2000 to $*** in 2001 and 2002, and then increased for the next three years from $*** in 2003 to $*** in 2004 and $*** in 2004. Staff Table 5.

[347] In 2000, by value, total exports for cumulated subject producers were $*** while home market shipments by subject producers in their home countries were $***. In 2001 and 2002, by value, total exports for cumulated subject producers were $*** while home market shipments were $***. In 2003, by value, total exports for cumulated subject producers were $*** while home market shipments were $***. In 2004, by value, total exports for cumulated subject producers were $*** while home market shipments were $***. In 2005, by value, total exports for cumulated subject producers were $*** while home market shipments were $***. Staff Table 5.

[348] Staff Table 5.

[349] We recognize that 15 foreign producers/exporters reported that shifting BB sales between the United States and alternative markets was "difficult" while three firms characterized the shift as "easy." CR at BB-II-9. Nevertheless, the data collected by the Commission in these reviews demonstrate that BB producers from the cumulated countries are able to shift markets relatively easily. See, e.g., CR/PR at Tables BB-IV-12 to BB-IV-15 & BB-IV-17.

[350] CR/PR at BB-V-7.

[351] CR/PR at Table BB-IV-10. Throughout the period examined in these reviews, the United States ranked second only behind Germany in terms of the value of BB global imports. The United States had BB global imports valued at $860.1 million in 2000, $745.5 million in 2001, $698.5 million in 2002, $690.8 million in 2003, and $781.3 million in 2004. CR/PR at Table BB-IV-10.

[352] European and Japanese Respondents have argued that there is little direct competition between subject imports and domestically produced BBs. They claim that subject producers compete predominantly in standard, less technical, and low-value BBs in the U.S. market while domestic production is almost exclusively of custom, more technical, and high-value BBs. They point to rationalization of production by domestic producers – including plant closures by Timken – as further evidence that domestic production is entrenched in high-value, custom BBs which do not compete with subject imports. See, e.g., SKF's Prehearing Brief at 71-83; JBIA's Prehearing Brief at 28-49.

We find that, while some rationalization of production may have occurred during the period of review, the record in these reviews does not support European and Japanese Respondents' arguments regarding limited competition between the domestic like product and subject imports. As discussed in the section on "Conditions of Competition," the record in these reviews reflects that substantial proportions of BBs are sold as both standard and customized product in the United States by U.S. producers and subject importers. Furthermore, as discussed above, more than 90 percent of purchasers and almost 65 percent of importers reported U.S. and subject BBs to be "always" or "frequently" interchangeable. There is also no evidence that various producers cannot compete for "custom" bearing purchases at the design stage. Domestic Interested Parties' Prehearing Brief at 35; Tr. at 105-106. Finally,

(continued...)

Additionally, cumulated subject producers have substantial excess capacity which could be easily directed at the U.S. market if the orders were revoked. Cumulated subject producers had *** BBs in excess capacity in 2000, *** BBs in excess capacity in 2001, *** BBs in excess capacity in 2002, *** BBs in excess capacity in 2003, *** BBs in excess capacity in 2004, and *** BBs in excess capacity in 2005.[354] In 2005, apparent U.S. consumption totaled 816.0 million BBs, meaning that the subject countries' excess capacity alone could satisfy approximately *** percent of apparent U.S. consumption.[355]

Given the relatively weak demand for BBs over the period of review and the fact that demand is not projected to increase substantially within the reasonably foreseeable future, the export-orientation of the subject producers, their total exports, production capacity, current volumes in the U.S. market, the high degree of interchangeability between subject imports and the domestic like product, and the incentive created by higher prices in the United States than in other markets, we conclude, based on the record of these reviews, that the volume of subject BB imports from France, Germany, Italy, Japan, and the United Kingdom, would likely be significant in the reasonably foreseeable future if the orders were revoked.

c. Likely Price Effects of Subject Imports

In its original determinations, the Commission found evidence of underselling and found that subject imports were suppressing prices for the domestic product.[356]

In the first reviews, the Commission found that subject imports would have significant price suppressing and price depressing effects within a reasonably foreseeable time.[357] The Commission reasoned that given the "combination of slackening demand and the high degree of substitutability between the domestic product and subject imports, any increases in subject imports were likely to result in price declines."[358] The Commission also observed that the likelihood of significant price effects was heightened by the fragmented nature of the domestic BB industry explaining that "[t]here are many suppliers able to meet purchasers' non-price concerns, such as engineering support and customization,

---

[352] (...continued)
the record in these reviews contains direct price comparisons between domestically produced BBs and subject imports for 20 different types of BB products, which further indicates that BB subject imports compete head-to-head with domestically produced BBs in the U.S. market even with the orders in place. CR/PR at Tables V-13 to V-22.

[353] European and Japanese Respondents argue that the certification process required by certain OEM customers for BBs is a significant barrier to competition in the U.S. market for BB subject producers. As discussed above, however, purchaser questionnaire responses indicate that the qualification process can be completed relatively quickly, within six months, or can take up to three years to complete, depending on such factors as the market needs of the particular purchaser or customer, or whether the customer has an established review process. Additionally, a number of subject BB producers are interrelated to U.S. and other foreign manufacturers of bearings, and these multinational BB producers can use those operations as an export platform to the United States, possibly reducing any qualification period. Moreover, cumulated subject imports and the domestic like product compete across a broad range of products, including the custom OEM automotive and custom OEM aerospace markets. CR/PR at Table BB-I-10.

[354] Derived from Staff Table 5.

[355] European and Japanese Respondents have argued that shifting sales to the United States is unlikely if the orders are revoked because subject countries produce BBs at their production facilities to metric specifications rather than to English measurements, which are used in the United States. However, the record in these reviews indicates that cumulated subject imports have maintained a significant market presence, even with the orders in place, indicating that measurement systems are not a significant impediment to subject imports.

[356] USITC Pub. 2185 at 68-69.

[357] USITC Pub. 3309 at 62.

[358] USITC Pub. 3309 at 62.

leaving price as the primary remaining area for competition."[359] The Commission explained that "[t]he limited pricing data collected in the course of these investigations do not give clear evidence of patterns of overselling, though the data do indicate that underselling occurred in more than half of the transactions covered."[360] The Commission further explained that "even modest additional volumes of subject imports would have significant price suppressing and depressing effects" within a reasonably foreseeable time "especially in light of conditions of competition existing in the domestic BB industry."[361]

Similarly, the limited pricing data collected in the current reviews do not give clear evidence of significant patterns of underselling or overselling, although underselling occurred in more than half of the transactions covered, even with the orders in place.[362]

The record in these reviews indicates that price is an important factor in purchasing decisions for BBs.[363] Furthermore, as discussed above in the section on "Conditions of Competition," more than 90 percent of purchasers found that the domestic like product and subject imports are substitutable. Therefore, if the orders were revoked, subject imports would likely be priced aggressively to gain market share, and would undersell the domestic like product by substantial margins so as to significantly suppress domestic prices.[364] As noted above, the volume of subject imports is likely to increase significantly in the reasonably foreseeable future if the antidumping duty orders are revoked. At these likely volumes, the subject imports from the cumulated countries would be likely to have a significant effect on the prices of the domestic like product.

We find that the significant volumes of subject imports are likely to suppress the price increases necessary to compensate for the domestic industry's increasing costs. Over the period of review prices generally increased for the U.S. pricing products, but not enough to offset the increases in cost of goods sold, as evidenced by the 5.1 percentage point increase in the ratio of COGS to net sales.[365] In the event of revocation, we find it likely that increasing volumes of subject imports would keep domestic producers from recouping increases in their costs. We therefore find that there likely would be significant underselling by the subject imports that, when combined with increased volumes of subject imports, would likely lead to significant adverse price effects within a reasonably foreseeable time if the orders were revoked. Demand for BBs is relatively price inelastic, and the U.S. market for BBs is characterized

---

[359] USITC Pub. 3309 at 63.

[360] USITC Pub. 3309 at 63.

[361] USITC Pub. 3309 at 63.

[362] Cumulated subject imports undersold the U.S. product in *** out of *** quarters for which pricing data were available. CR/PR at Table BB-V-2. In 2005, reported pricing data (by quantity) accounted for approximately 2.9 percent of U.S. producers' shipments of BBs, 11.0 percent of U.S. shipments of subject imports from France, 0.7 percent of U.S. shipments of subject imports from Germany, 1.2 percent of U.S. shipments of subject imports from Italy, 1.8 percent of U.S. shipments of subject imports from Japan, and 0.1 percent of U.S. shipments of subject imports from the United Kingdom. In 2005, reported pricing data (by value) accounted for approximately 0.5 percent of U.S. shipments of BBs, 1.3 percent of U.S. shipments of subject imports from France, 0.4 percent of U.S. shipments of subject imports from Germany, 1.6 percent of U.S. shipments of subject imports from Italy, 1.3 percent of U.S. shipments of subject imports from Japan, and 0.4 percent of U.S. shipments of subject imports from the United Kingdom. CR at BB-V-9 n.19, PR at BB-V-7 n.19.

[363] In responses to the Commission's questionnaires regarding the importance of price as a factor in purchasing decisions, 43 purchasers reported that price was very important, 6 purchasers reported that price was somewhat important, and none reported that price was not important. CR/PR at Table BB-II-2. Purchasers made comparisons on a number of factors between U.S.-produced ball bearings and subject imports from France, Germany, Italy, Japan, and the United Kingdom. Although quality was identified by purchasers as the most important factor when selecting a bearing supplier, purchasers ranked price as the second most important factor. CR/PR at Table BB-II-1.

[364] Our record reflects that U.S. prices are generally higher than in other markets. CR/PR at BB-V-7.

[365] CR/PR at Table C-2. Over the period of review, the price of steel bar, the primary raw material in BBs, increased from $*** per ton in 2000 to $*** per ton in 2005. CR/PR at BB-V-1.

by a fair degree of price competition. The domestic like product and subject imports are generally substitutable, and BBs represent a relatively small share of the cost of the downstream products in which they are ultimately used. Given these conditions, we find that the likely significant volumes of subject imports would likely have significant price effects within a reasonably foreseeable time if the orders were revoked.

Accordingly, on the basis of the record in these reviews, including information collected in the original investigations and the earlier reviews, we find that revocation of the antidumping duty orders on BB imports from France, Germany, Italy, Japan, and the United Kingdom would be likely to lead to significant underselling by the subject imports and significant price depression or suppression within a reasonably foreseeable time.

d. Likely Impact of Subject Imports

In its original determinations, the Commission found that the volume and price effects of subject imports were significant and had an adverse impact on the domestic industry, as shown by the consistent decline in profitability of the domestic industry.[366]

In the first reviews, the Commission found that, given the particular conditions of competition in the domestic BB industry, and in light of likely price and volume effects, revocation of the orders would have a significant adverse impact on the domestic industry. At the outset, the Commission stated that it did not agree with the domestic industry's contention that it was vulnerable. Nevertheless, the Commission explained that by most conventional measures the domestic industry's position was similar to that existing during the original investigations, when the Commission determined that it was being materially injured by subject imports. While acknowledging that a significant percentage of the domestic industry favored revocation of the orders, the Commission referenced the domestic industry's declining production, capacity utilization, operating income as a percentage of net sales, and capital expenditures in reaching its conclusion that "the domestic industry is in a position to be negatively affected by the likely changes in volume of subject imports and subsequent price changes that would occur after revocation."[367] The Commission also emphasized that its decision was "based principally on the fragmented nature and current conditions of the BB industry and market" explaining that "[u]nlike the industries for TRBs, SPBs, or even CRBs, the collective effect of so many individual BB producers complementing their U.S. production with subject imports likely would be injurious to the industry as a whole given the current condition of the BB industry and weak demand in the BB market."[368]

Most industry performance indicators declined during this period of review. Although demand for BBs fell just slightly over the period of review, domestic capacity, production, and capacity utilization, all dropped substantially more over the period of review.[369] Capacity declined from 448.8 million BBs in 2000 to 338.4 million BBs in 2005, an overall decline of 24.6 percent. Production declined from 328.2 million BBs in 2000 to 203.8 million BBs in 2005, an overall decline of 37.9 percent.[370] Capacity utilization declined from 73.1 percent in 2000 to 60.2 percent in 2005, an overall

[366] USITC Pub. 2185 at 64-65.

[367] USITC 3309 at 41-42.

[368] USITC Pub. 3309 at 66-67.

[369] CR/PR at Table C-2.

[370] CR/PR at Table C-2.

decline of 12.9 percentage points.[371] Inventory as a share of total shipments increased from 2000 to 2005.[372]

U.S. producers' market share, by value, fell from 67.5 percent in 2000 to a period low of 63.2 percent in 2005, a decline of 4.3 percentage points.[373] Net sales, by value, decreased from $2.2 billion 2000 to $1.9 billion in 2005, a 12.0 percent decrease over the period.[374] U.S. shipments, by value, declined from $2.0 billion in 2000 to $1.7 billion in 2005, a decrease of 11.7 percent.[375]

Gross profit declined from $358.4 million in 2000 to $218.6 million in 2005, a decline of 39.0 percent.[376] Operating income fell sharply from $132.0 million in 2000 to $7.3 million in 2005, a 94.4 percent decline over the period, with the domestic BB industry experiencing operating losses in 2004.[377] Additionally, operating income as a percentage of net sales dropped from 6.1 percent in 2000 to 0.4 percent in 2005, a 5.7 percentage point decline over the period.[378]

The number of production and related workers declined from 10,885 in 2000 to a period low of 8,424 in 2005, a decline of 22.6 percent. Hours worked also declined over the period by 21.0 percent, dropping from 21.2 million hours worked in 2000 to 16.8 million hours worked in 2005.[379] Worker productivity dropped by 22.0 percent over the period.[380] Capital expenditures fell from $107.7 million in 2000 to $77.2 million in 2005, a decline of 28.3 percent.[381]

Because the domestic BB industry has experienced declines in many key industry performance indicators over the period of review, we find that the industry is currently vulnerable to material injury. As discussed above, we have concluded that revocation of the antidumping duty orders on BBs from France, Germany, Italy, Japan, and the United Kingdom would lead to significant increases in the volume of subject imports. Because the subject imports are substitutable for the domestic like product, and the domestic industry supplies the majority of the U.S. market, any increase in subject import volumes will likely be in large part at the expense of an already vulnerable domestic industry. In light of the fact that U.S. demand for BBs is unlikely to show robust increases in the reasonably foreseeable future, such increases in subject import volume will likely have the effect of exacerbating the declines in capacity, production, market share, employment, and capital expenditures. Additionally, because of the likely aggressive pricing of the subject imports, the domestic industry will either need to cut prices for the domestic like product or lose sales. Under either scenario, the domestic industry's revenues will likely

---

[371] CR/PR at Table C-2.

[372] Inventory as a share of total shipments increased from 11.0 percent in 2000 to 12.3 percent in 2005. Inventory quantity declined from 35.7 million BBs in 2000 to 25.3 million BBs in 2005. CR/PR at Table C-2.

[373] U.S. producers' market share by quantity fell from 29.8 percent in 2000 to a period low of 21.3 percent in 2005, a drop of 8.5 percentage points. Nonsubject sources' market share increased over the period by 5.2 percentage points by value, and 15.2 percentage points by quantity. CR/PR at Table C-2.

[374] CR/PR at Table C-2.

[375] CR/PR at Table C-2.

[376] CR/PR at Table C-2.

[377] CR/PR at Table C-2.

[378] European and Japanese Respondents argue that the poor performance by domestic BB producers actually reflects financial difficulties faced by customers/end-users in the U.S. automobile industry, which they claim is unrelated to subject imports. See e.g., SKF Prehearing Brief at 89-91. However, the record in these reviews indicates that many domestic producers had poor financial performance, not just those that sell predominantly to automotive purchasers. CR/PR at Table III-9.

[379] However, hourly wages increased from a period low of $18.19 in 2000 to a period high of $20.97 in 2005, an increase of 15.3 percent. CR/PR at Table C-2.

[380] CR/PR at Table C-2.

[381] CR/PR at Table C-2.

decline significantly in light of the anticipated volume of subject imports. This, in turn, will likely lead to further declines in the industry's operating performance, which will continue the trend of declining profitability for the industry in the reasonably foreseeable future. Accordingly, we conclude that revocation of the orders on BB subject imports from France, Germany, Italy, Japan, and the United Kingdom would likely have a significant adverse impact on the domestic industry.[382]

4. Subject BB Imports From Singapore

a. Legal Standard in a Five Year Review

The relevant legal standards applicable to five year reviews are presented above in subsection III.A.[383]

b. Views of Chairman Pearson and Commissioner Koplan

In the original investigations, the value of subject BBs from Singapore averaged approximately $21.0 million annually. In the first review, the value of subject BBs from Singapore averaged approximately $44.0 million annually, but in the second review, they have steadily declined from approximately $35.0 million in 2000 to $3.5 million in 2005. At the same time, subject BBs from Singapore held an extremely small share of the U.S. market that never exceeded 1.4 percent, and which declined to a scant 0.1 percent of the market in 2005.[384]

In our no discernible adverse impact finding concerning Singapore above, we noted that, while its BB industry is export-oriented, the industry in Singapore is focusing on export markets other than the United States, in particular Asian markets such as ***. Although Singapore BB production and production capacity increased over the period of review, the industry's capacity utilization was high

---

[382] European and Japanese Respondents have argued that they have little economic incentive to injure the domestic industry because they own U.S. production facilities and have made substantial investments in the U.S. market. See, e.g., SKF Prehearing Brief at 45-47. While each subject producer arguably has no incentive to export BBs to the United States that would undercut its own U.S. operations, each subject producer has the incentive to take market share away from other U.S. producers (i.e., their competitors) and has demonstrated the ability to do so, even under the handicap of the antidumping duty orders. As previously discussed, during the period examined in these reviews, the domestic BB industry remains fragmented with no single dominant producer, and the domestic industry's financial condition has worsened significantly, even with the orders in place. Accordingly, we find that revocation of the orders on BB subject imports from the cumulated countries would likely have a significant adverse impact on the domestic industry as a whole.

European and Japanese Respondents also have argued that subject imports are not likely to have a significant adverse impact upon the domestic industry if the orders are revoked by virtue of the growing presence of nonsubject imports from China in the U.S. market. However, the United States remains an attractive market for cumulated subject imports, which have lost less than one percentage point of market share during the period of review and have ranged from within 5.5 to 10.4 percentage points of nonsubject imports, even without the discipline of the antidumping duty orders in place and with the vast majority of purchasers reporting that nonsubject imports from China are comparable to subject imports (CR/PR at C-2 & Staff Table 6). Accordingly, we find that subject imports from the five cumulated countries are likely to have a significant adverse impact on the domestic industry within a reasonably foreseeable time if the orders are revoked.

[383] In the final results of its sunset review of the antidumping order on Singapore, Commerce found a likely margin of 25.08 percent. CR/PR at Table BB-I-2. In its last administrative review, Commerce made no duty absorption findings. See CR at BB-I-10, PR at BB-I-9.

[384] CR/PR at Table BB-I-1.

throughout the review period, and exceeded *** percent in four of the six years surveyed.[385] We also find that NMB/Pelmec's ability to supply BBs to the United States in significant quantities would likely continue to be limited by the types of bearings it primarily supplies, namely miniature BBs, which compete in small and declining quantities with the domestic like product.

Consistent with those findings, we find that the likely volume of subject BB imports from Singapore would not likely be significant within a reasonably foreseeable time if the order is revoked. We also find, therefore, that the marginal volume of subject BB imports from Singapore would not be likely to cause significant negative price effects.[386] We further find that subject BB imports from Singapore would not be likely to have a significant adverse impact on the domestic industry's output, sales, market share, profits, productivity, return on investments, utilization of capacity, cash flow, inventories, employment, wage growth, ability to raise capital, investment, or development and production efforts if the order is revoked. We therefore find that revocation of the antidumping duty order on Singapore would not be likely to lead to the continuation or recurrence of material injury to the U.S. BB industry within a reasonably foreseeable time.

c. Views of Vice Chairman Aranoff and Commissioner Hillman

i. Likely Volume of Subject Imports from Singapore

During the original period of investigation, 1985-1987, the value of subject imports from Singapore ranged from $20.8 million to $22.1 million. In the first period of review, 1997-1998, the value of such subject imports was $45.5 million in 1997 and $42.7 million in 1998. During both investigation periods, the market share by value for subject imports from Singapore never exceeded 1.4 percent.[387]

During the current review period, subject imports from Singapore declined steadily, falling from $35.0 million in 2000 to $3.5 million in 2005, a 90.1 percent decline. This decline occurred despite Singapore having antidumping margins and cash deposit rates below 2 percent for most of the period of review.[388] The market share by value in 2005 held by the subject imports from Singapore was 0.1 percent, below that of any other subject country.[389]

The ball bearings industry in Singapore has increased its capacity over the review period, and production volumes have increased as well, keeping capacity utilization at levels exceeding *** percent during most of the review period.[390] However, while the industry's production and shipments by quantity have increased, shipments by value fell by *** percent from 2000 to 2005.[391] Although the industry in Singapore is export oriented, a significant shift in destination markets has taken place over the review period, with *** of total shipments now destined for Asia. In 2000, exports from Singapore to Asia were about *** percent of total shipments; in 2004 and 2005, this number exceeded *** percent. In contrast,

---

[385] CR/PR at Table BB-IV-8. In 2000, 2003, 2004, and 2005, the Singapore industry's capacity utilization exceeded *** percent.

[386] We have no pricing data with respect to subject imports from Singapore. CR/PR at Table BB-V-2.

[387] CR/PR at Table BB-I-1.

[388] CR/PR at Table BB-I-7.

[389] CR/PR at Table BB-I-16.

[390] CR/PR at Table BB-IV-8.

[391] CR/PR at Table BB-IV-8. As noted earlier, we generally rely on value, rather than quantity, measures in assessing volume factors.

the share of shipments by the Singapore industry exported to the U.S. market fell from *** percent in 2000 to *** percent in 2005.[392]

As discussed in the Cumulation section, the Singapore industry is largely limited to the production of low value small and miniature bearings, between 9mm and 30mm in diameter.[393] No evidence exists that Singapore will likely shift to being a supplier of a full range of bearing products. Miniature bearings account for a very small share of domestic producers' U.S. shipments; this share fell from 6.3 percent in 2000 to 4.5 percent in 2005.[394] Thus, even if there were a modest increase in BB imports from Singapore, there would be little competition with the domestic like product.[395]

We therefore find, based on the record in these reviews and our discussion of cumulation for Singapore above, that the volume and market share of subject imports from Singapore, both in absolute terms and relative to production and consumption in the United States, are not likely to be significant within a reasonably foreseeable time if the order were revoked.[396]

ii. Likely Price Effects of Subject Imports from Singapore

In these reviews, as in the first reviews, no price data specific to ball bearings from Singapore were available to compare them to the domestic like product. In the original investigation, imports from Singapore undersold the domestic like product in virtually all comparisons. Nevertheless, given the likely small volume of subject imports from Singapore if the order were revoked, the limitations of the industry in Singapore which produces only small and miniature BBs, and the small share of the domestic industry's shipments accounted for by such bearings, we find that revocation of the antidumping duty order on subject imports of ball bearings from Singapore would not be likely to lead to significant underselling or significant price depression or suppression, within a reasonably foreseeable time.

iii. Likely Impact of Subject Imports from Singapore

As noted above, during this period of review, most industry performance indicators declined, including domestic capacity, production, capacity utilization, market share, net sales, operating income, and most employment indicators.[397] We concluded that, based on these data, the domestic industry is vulnerable to material injury. However, as discussed above, revocation of the order likely would not lead to a significant increase in the volume or market share of the subject imports from Singapore, nor would it lead to significant price effects. We therefore find that revocation of the antidumping duty order would

---

[392] CR/PR at Table BB-IV-8.

[393] Singapore Respondents' Posthearing Brief, Response to Chairman Pearson's Question at 2; Hearing Tr. at 357 (Morgan).

[394] Staff Table 2.

[395] Domestic interested parties argue that we should consider the impact on the domestic industry that produces miniature BBs to assess injury, arguing that "miniature ball bearings accounted for over 10 percent or more of U.S. domestic consumption of miniature ball bearings in most years." Domestic Interested Parties' Posthearing Brief, Exh. Lane at 16; see also id. at 10. We disagree. We are required by statute to consider the domestic industry as a whole. See 19 U.S.C. § 1677(4); Timken Co. v. United States, 321 F. Supp.2d 1361, 1367 n.2 (Ct. Int'l Trade 2004). See also Calabrian Corp. v. United States, 794 F. Supp. 377, 385-86 (Ct. Int'l Trade 1992) ("This Court has repeatedly affirmed ....that 'Congress intended the ITC determine whether or not the domestic industry (as a whole) has experienced material injury due to the imports. This language defies the suggestion that the ITC must make a disaggregated analysis of material injury,'" quoting Copperweld Corp. v. United States, 682 F. Supp. 552, 569 (Ct. Int'l Trade 1988). Neither domestic interested parties nor any other party has made any arguments that miniature ball bearings should be defined as a separate domestic like product.

[396] We concur with and adopt the discussion in fn. 252 regarding domestic interested parties' arguments regarding imports from Thailand.

[397] CR/PR at Table C-2.

not be likely to lead to a significant adverse impact on the domestic industry within a reasonably foreseeable time.

Thus, we conclude that if the order were revoked, subject imports from Singapore would not be likely to lead to continuation or recurrence of material injury to the domestic industry within a reasonably foreseeable time.

D. SPB Imports From France

In the first five-year reviews, as noted above, the Commission found, by a vote of 3-2, that revocation of the antidumping duty order on SPBs from France would be likely to lead to continuation or recurrence of material injury to an industry in the United States within a reasonably foreseeable time.[398] The five participating Commissioners each wrote separate views. For the reasons set forth below, we determine in this second review that revocation of the antidumping duty order on SPBs from France would not be likely to lead to continuation or recurrence of material injury to an industry in the United States within a reasonably foreseeable time.[399]

1. Legal Standard in a Five-Year Review

The relevant legal standards applicable to five-year reviews are presented above in subsection III.A.[400]

2. Conditions of Competition

The following conditions of competition are relevant to our determination.

Demand

Demand for SPBs is primarily driven by the manufacture of machinery and equipment in many industries, including the automotive, aerospace, construction, manufacturing, medical, and mining industries, but especially the aerospace and construction industries.[401] Demand for the final products in SPB-using industries is usually a function of overall U.S. economic activity. U.S. GDP grew solidly in 2000, softened during 2001 and 2002, and regained strength in 2003. GDP has grown at over six percent in 2004 and 2005, and the OECD forecasts similar near-term growth.[402]

U.S. manufacturing activity fluctuated until May 2003, and has been expanding since then.[403] In the construction and aerospace sectors, industry groups have touted recent growth and forecasted future industry growth. The aerospace industry reportedly experienced growth at *** percent between 2004 and

[398] By a 3-2 vote, the Commission also found that revocation of the orders then in place on Germany and Japan would not be likely to lead to continuation or recurrence of material injury within a reasonably foreseeable time.

[399] Commissioners Koplan and Lane dissenting. See Dissenting Views of Commissioners Stephen Koplan and Charlotte R. Lane with respect to Spherical Plain Bearings from France.

[400] In the final results of its affirmative expedited sunset review, Commerce found likely dumping margins of 39.0 percent for SKF and an all others rate of 39.0 percent. 70 Fed. Reg. 58183 (Oct. 5, 2005). In its last administrative review, Commerce made no duty absorption findings. See CR/PR at Table SPB-I-2.

[401] CR at SPB-II-7, PR at SPB-II-5.

[402] CR at SPB-II-7-SPB-II-8, PR at SPB-II-5.

[403] CR at SPB-II-8, PR at SPB-II-5.

2005, and forecasts growth of *** percent in 2006. A construction industry survey showed high levels of optimism among contractors and construction equipment distributors.[404]

Demand for SPBs strengthened after 2002, and most industry participants expect stable to increasing demand in the near future. The value of apparent consumption of SPBs fell by 3.1 percent from 2000 to 2001 and then remained level from 2001 to 2002, before increasing by 1.7 percent in 2003, 23.9 percent in 2004, and 9.9 percent in 2005.[405] Thus, demand for SPBs has grown during the period of review and the record indicates that it will likely experience further growth in the reasonably foreseeable future.

Given the wide variety of customers and the multitude of distinct industries for which SPBs are used, we continue to find, as we did in the first reviews, that this industry is not characterized by a regular and measurable business cycle that might be characteristic of other industries. Whereas the various industries that use SPBs in their end use applications may be characterized by a specific business cycle, SPB producers respond to several different end-user industries and their individual business cycles. The diversity of customers and industries that use SPBs limits the effects of upturns or downturns in demand from particular customers or user industries, particularly to the extent that, at any given time, some SPB end-user industries are likely at different positions in their business cycles than other SPB end-user industries.

Supply

The U.S. market continues to be supplied by domestic production as well as by subject and nonsubject imports. The domestic industry remains the largest supplier of SPBs to the U.S. market. Its share of apparent U.S. consumption fluctuated within a range of approximately 81 percent to 86 percent on the basis of value from 2000 to 2003, then fell to 75.7 percent in 2004 and to 68.7 percent in 2005, as the share of apparent U.S. consumption accounted for by nonsubject imports rose, as described further below.[406]

The domestic industry has consolidated and restructured since the first review. Emerson Power Transmission discontinued its SPB operations in 2001 when ***.[407] SKF *** in 2005.[408] In addition, QAI Precision Products, with sales that accounted for *** percent of the value of total U.S. shipments in 1998, is no longer manufacturing SPBs in the United States.[409] In February 2003, the former Torrington operations were acquired by Timken, which had not previously reported SPB production.[410] Also in 2003, RBC ***.[411] With the consolidation and restructuring, overall domestic capacity to produce SPBs decreased irregularly by 7.8 percent between 2000 and 2005.[412]

---

[404] CR at SPB-II-8, PR at SPB-II-5.

[405] CR/PR at Tables SPB-I-9 & C-3. Consistent with our approach in past investigations regarding bearings, we generally rely on value measures, rather than quantity, in assessing volume factors such as apparent consumption, shipments, and imports because of the inherent risks in relying on quantity data due to product mix issues. Literally thousands of bearings are subsumed in the three categories of bearings covered by these reviews. Unit values may vary from a few cents to thousands of dollars, reflecting differences in size, manufacturing tolerances, and other variables. CR at Overview-9-10, PR at Overview-8.

[406] CR/PR at Table SPB-I-9.

[407] CR at SPB-I-15, PR at SPB-I-11.

[408] CR at SPB-I-15, PR at SPB-I-11.

[409] CR at SPB-I-1, PR at SPB-I-1.

[410] CR at SPB-I-15, PR at SPB-I-11.

[411] CR/PR at Table SPB-I-7.

[412] CR/PR at Table SPB-III-1.

Subject imports from France, in terms of value, declined irregularly between 2000 and 2005. Overall, the value of subject imports from France in 2005 was 33.0 percent less than for 2000. As a share of apparent U.S. consumption by value, subject imports from France declined overall from 1.3 percent in 2000 to 0.6 percent in 2005.[413]

Nonsubject imports in the U.S. market grew during the period of review. In terms of value, they increased 163.1 percent between 2000 and 2005; as a share of apparent U.S. consumption by value, nonsubject imports increased from 15.7 percent in 2000 to 30.7 percent in 2005.[414]

Substitutability

Domestically produced SPBs and SPB imports from France and other sources are generally substitutable. Most U.S. producers, U.S. importers, and U.S. purchasers reported that SPBs from the various sources are "always" or "frequently" interchangeable.[415]

Available data from purchasers indicate that quality (ranked first) and price (ranked second) are the most important factors that influence purchasing decisions for SPBs.[416] Other factors frequently cited by purchasers as important were availability, delivery time, and customer requirements.[417] A number of purchasers reported that they required certification or qualification of their supplier for most purchases. However, many reported that no suppliers had failed to receive approval.[418]

Both domestically produced SPBs and subject imports are sold in the OEM and aftermarket channels of distribution. U.S. producers shipped 77.3 percent of their U.S. shipments to end users/OEMs in 2005, and the remaining 22.7 percent to distributors/aftermarket customers.[419] U.S. importers shipped 83.2 percent of their U.S. shipments of SPBs to end users/OEMs in 2005, and the remaining 16.8 percent to distributor/aftermarket customers.[420] With respect to custom bearings, which accounted for the majority of U.S. shipments of SPBs, both U.S.-produced bearings and subject imports from France were shipped, in large part, to the OEM aerospace segment. For certain other end-use categories there was no overlap between the domestically produced SPBs and subject imports from France.[421]

We find that these conditions of competition in the U.S. market provide us with a reasonable basis on which to assess the likely effects of revocation of the order.

3. Likely Volume of Subject Imports

In the original investigations, on an uncumulated basis,[422] subject imports from France were ***. *** were recorded in 1985. Subject imports from France had a value of $*** in 1986, and a value of

[413] CR/PR at Tables SPB-I-1 & C-3.

[414] CR/PR at Table SPB-I-1 & C-3.

[415] CR/PR at Table SPB-II-4.

[416] CR/PR at Table SPB-II-1.

[417] CR/PR at Table SPB-II-2. Purchasers generally rated subject import and nonsubject imports as comparable to domestically produced SPBs across a variety factors. CR/PR at Table SPB-II-3.

[418] CR at SPB-II-17, PR at SPB-II-12.

[419] CR/PR at Table SPB-I-5.

[420] CR/PR at Table SPB-I-5.

[421] CR/PR at Table SPB-I-4, CR at SPB-I-11, PR at SPB-I-9.

[422] In the original investigations, the Commission conducted its analysis of subject imports from France, Germany, and Japan on a cumulated basis.

$*** in 1987.[423] In value terms, subject imports from France constituted less than *** percent of apparent U.S. consumption throughout the period examined.[424] In contrast, cumulated subject imports accounted for *** percent of apparent U.S. consumption in 1987, and captured more than *** of domestic consumption by interim 1988.[425]

In the first five-year reviews, subject imports from France constituted between 0.6 percent and 0.8 percent of apparent U.S. consumption, and had a value of $998,000 in 1997 and $1.3 million in 1998.[426] Cumulated subject imports accounted for 12.3 percent of apparent U.S. consumption in the last full year of that review period.[427]

During the period of this review, subject imports from France fluctuated in value but never exceeded 1.3 percent of apparent U.S. consumption, which they reached in 2000. Subject imports from France constituted 0.4 percent of apparent U.S. consumption in 2002 and 2003, 1.2 percent in 2004, and 0.6 percent in 2005. In value terms, subject imports declined overall by 33.0 percent between 2000 and 2005.[428] They had a value of $1.6 million in 2000, $659,000 in 2001, $476,000 in 2002, $545,000 in 2003, $1.8 million in 2004, and $1.0 million in 2005.[429]

France has been a low-volume supplier of SPBs to the U.S. market, with a relatively stable market share that has declined overall during this review period, notwithstanding a significant increase in demand for SPBs, with apparent consumption rising by 34.5 percent over the POR.[430] The last time subject imports from France were not under an order, during the original investigation, there were *** imports from France.

Moreover, throughout the period of review, SKF Aerospace France, the only producer of SPBs in France to report usable data to the Commission, maintained a constant production capacity of *** bearings.[431] SKF Aerospace reported capacity utilization of *** percent in 2005.[432] SKF Aerospace thus has excess capacity, but the *** destination for its SPB shipments is the home market.[433] SKF Aerospace also maintains *** levels of inventory, and reported that ***.[434] The firm also reported that it ***.[435]

There appears to be additional capacity in France for the production of subject SPBs beyond that of SKF Aerospace. Subject imports from France in 2004 and 2005 are *** than current Commission data for reported French capacity, and SKF Aerospace itself reported that it accounted for *** percent of

---

[423] First Reviews CR/PR at Table SPB-I-1. The investigation pre-dated the negligibility provision, added by the 1988 Act, that we apply in original investigations today. 19 U.S.C. § 1677(24) (requiring termination of an investigation when imports from a subject country are less than 3 percent of the volume of all such merchandise imported into the United States in the most recent 12-month period for which data are available that precedes the filing of the petition).

[424] CR/PR at Table SPB-I-1.

[425] First Reviews CR/PR at SPB-I-1; USITC Pub. 2185 at 71.

[426] CR/PR at Table SPB-I-1.

[427] CR/PR at Table SPB-I-1.

[428] CR/PR at Tables SPB-I-1 & C-3.

[429] CR/PR at Table SPB-I-1.

[430] CR/PR at Table C-3.

[431] CR/PR at Table SPB-IV-3.

[432] CR/PR at Table SPB-IV-3 (its capacity utilization fluctuated from a low of *** percent in 2004 to a high of *** percent in 2001).

[433] CR/PR at Table SPB-IV-3.

[434] CR/PR at Table SPB-IV-3, CR at SPB-II-12 n.30, PR at SPB-II-8 n.30. *** reported that *** percent of its sales were from inventory, with a lead time of two months; the balance of sales were produced to order with a lead time of eight months. CR at SPB-II-12 n.30, PR at SPB-II-8 n.30.

[435] CR at SPB-IV-8, PR at SPB-IV-5.

production of SPBs in France in 2005.[436] Nevertheless, the best data on the record for the French industry as a whole show that France accounts for a small percentage of global exports of spherical plain bearings.[437] Moreover, France is a net importer of spherical plain bearings.[438]

Based on all available information, including historical subject import volume levels and their share of the U.S. market, the data of SKF Aerospace, France's limited global exports, and France's status as a net importer, we find that even though there is likely some excess capacity in France, subject imports from France are not likely to increase significantly if the order were revoked.[439] Their volume and market share have historically been at *** low levels, even before the order was in place, and there is no reason to believe that they would increase so rapidly as to reach significant levels in the reasonably foreseeable future. Subject imports from France held a market share of less than *** percent of apparent U.S. consumption measured by value during the original investigations, before the order was imposed. In 1997 and 1998, the first review period, they held a market share of, respectively, 0.6 and 0.8 percent. In this review period, their share of the U.S. market has remained extremely small, 1.3 percent of the market in 2000, 0.6 percent in 2001, 0.4 percent in 2002, 0.4 percent in 2003, 1.2 percent in 2004 and 0.6 percent in 2005. They have not attempted to capture a larger share of the U.S. market, even though demand for SPBs in the U.S. market has recently increased substantially.[440]

In addition, the potential for product shifting for SPBs appears insignificant, due to the inability to transfer equipment and related workers between production of SPBs and other products.[441] Nor do there appear to be tariff or non-tariff barriers to trade on exports from France of SPBs in countries other than the United States.[442]

Domestic interested parties argue that the manner in which U.S. imports from Germany and Japan increased after their orders were revoked is a reasonable indicator that subject imports from France would respond similarly upon revocation.[443] We reject this argument. The unique conditions that drive trends for one foreign industry's trade at a particular time provide no reasoned basis for assuming how the industry in a different country will act at another time. Moreover, revocation of the orders on SPBs from Germany and Japan does not appear to have triggered import volume increases as argued by domestic interested parties. Those orders were revoked following the Commission's negative determinations in the first five-year reviews in June 2000. In 2001, SPB imports from both countries actually fell. SPB imports from both countries did not increase significantly until 2004 and 2005, when demand in the U.S. market was at its highest.[444]

Based on the import history for subject imports from France and the available information regarding the foreign industry, as well as the conditions of competition in the U.S. market for SPBs, we find that the volume of subject imports from France is not likely to increase significantly if the order is revoked. Moreover, we find that, even if subject imports from France increased over current levels in the

---

[436] CR at SPB-II-5, SPB-IV-8, PR at SPB-II-5, SPB-IV-5.

[437] CR/PR at Table SPB-IV-4. We recognize that the product coverage for these data is not exactly comparable to the scope of this review.

[438] CR/PR at Tables SPB-IV-4 and SPB-IV-5.

[439] We decline to draw adverse inferences regarding the French industry, as requested by the domestic interested parties, and instead rely upon available information in the record, which is sufficient and appropriate in the circumstances to conclude that the volume of subject imports from France is not likely to increase significantly if the order were revoked.

[440] CR/PR at Table SPB-I-1.

[441] CR at SPB-II-6, PR at SPB-II-4; cf. CR at SPB-II-5, PR at SPB-II-3 (noting that five domestic producers reported no production substitutes).

[442] CR at SPB-IV-8, PR at SPB-IV-5.

[443] Domestic Interested Parties' Prehearing Brief at 109-110.

[444] CR/PR at Table SPB-IV-1.

event of revocation of the order, any increase is not likely to have a significant effect, given the strong and growing demand for SPBs in the U.S. market and the strong condition, as discussed further below, of the domestic industry.

4. Likely Price Effects of Subject Imports

In the original investigations, the Commission found that specific pricing data for cumulated SPBs were generally inconclusive, but found "some evidence" of price depressing effects by the subject imports.[445]

In the first five-year reviews, two Commissioners in the majority concluded that cumulated SPB imports would likely result in significant negative price effects in the U.S. market within a reasonably foreseeable time, while a third Commissioner exercised his discretion not to cumulate and found subject import volume from France would likely result in significant negative price effects in the U.S. market within a reasonably foreseeable time.[446]

As in the first reviews, we have no available pricing comparisons between the U.S. product and the French product.[447] The record data that we have show that the domestic industry has been able to increase prices annually and generally pass along increases in production costs to purchasers.

Prices for the SPB products for which we collected data generally rose over the period of review. For sales to distributors, prices of product 21 rose *** percent, prices of product 23 rose *** percent, and prices of product 24 rose *** percent.[448] For sales to end users, prices of product 23 rose *** percent, and prices of product 24 rose *** percent.[449] One purchaser reported that *** threatened to stop shipping product in order to obtain price increases. When those firms succeeded in obtaining the increases, their competitors followed with price increases.[450]

The record in this review does not indicate that subject imports from France would be likely to undersell significantly the U.S. product if the orders are revoked. Moreover, because we have concluded that any increase in the volume of subject imports, given growing demand, is not likely to be significant, we find that any limited additional subject imports from France would not be likely to depress or suppress U.S. prices to a significant degree. We therefore find that subject imports would not likely have an adverse price impact if the order is revoked.

5. Likely Impact of Subject Imports

In the original determinations, the Commission found that the dramatic surge in cumulated subject import volume and market share for a product whose demand was relatively unresponsive to price declines, and the high absolute level of market penetration, in combination with the severe decline in the financial condition of the domestic industry, provided sufficient evidence of a causal connection between the subject imports and the material injury being experienced by the domestic industry.[451]

In the first five-year reviews, two Commissioners in the majority concluded that cumulated SPB imports likely would have a significant negative impact on the domestic industry, while a third exercised

---

[445] USITC Pub. 2185 at 70-71.

[446] USITC Pub. 3309 at 63. Chairman Koplan found that the record in the first reviews contained no pricing data on the subject imports from France, and the average unit value data did not permit meaningful price comparisons with the domestic like product. Id.

[447] ***. CR at SPB-V-7, PR at SPB-V-5.

[448] CR at SPB-V-7, PR at SPB-V-5.

[449] CR at SPB-V-7, PR at SPB-V-5.

[450] CR at SPB-V-5 n.12, PR at SPB-V-3.

[451] USITC Pub. 2185 at 71-72.

his discretion not to cumulate and found subject imports from France likely would have a significant negative impact on the domestic industry.[452]

We find that the domestic industry is not currently in a vulnerable state. The domestic industry has been highly profitable throughout the period of review. Net sales, by value, increased from $120.2 million in 2000 to $123.5 million in 2005, the highest level over the period.[453] Unit operating income increased dramatically over the period, increasing by 35.5 percent from 2000 to 2005.[454] Operating income and gross profits were also at their highest levels in 2005.[455] Most importantly, the domestic industry was profitable throughout the period, and achieved its highest operating income of 9.6 percent in 2005.[456]

Additionally, the number of production workers has increased from *** in 2000 to *** in 2005, an increase of *** percent.[457] Hours worked, wages paid, and hourly wages also increased during the period of review by *** percent, *** percent, and *** percent, respectively.[458]

The demand trends in the United States also do not suggest that the domestic industry is vulnerable to material injury. The domestic industry's financial performance during the period of review occurred during a time of strengthening demand for SPBs. Apparent U.S. consumption, for example, increased 34.5 percent by value from 2000 to 2005, with most of the growth occurring since 2002.[459] Moreover, SPB demand is forecasted to grow further in the reasonably foreseeable future, as discussed above.

Given that we do not find it likely that there will be a significant volume of subject imports from France or that there will likely be significant price effects, and because the domestic industry is in a healthy, rather than vulnerable, condition, we conclude that revocation of the antidumping duty order would not likely have a significant adverse impact on the domestic industry within a reasonably foreseeable time in terms of output, sales, market share, profits, productivity, return on investments, utilization of capacity, cash flow, inventories, employment, wage growth, ability to raise capital, investment, or the industry's development and production efforts.

CONCLUSION

For the foregoing reasons, the Commission determines that revocation of the antidumping duty orders on TRBs from China, and on BBs from France, Germany, Italy, Japan, and the United Kingdom, would be likely to lead to continuation or recurrence of material injury to an industry in the United States within a reasonably foreseeable time. The Commission further determines that revocation of the antidumping duty orders on BBs from Singapore and on SPBs from France would not be likely to lead to continuation or recurrence of material injury to an industry in the United States within a reasonably foreseeable time.

---

[452] USITC Pub. 3309 at 63.

[453] CR/PR at Table C-3.

[454] CR/PR at Table C-3.

[455] CR/PR at Table C-3.

[456] CR/PR at Table C-3.

[457] CR/PR at Table SPB-III-5.

[458] CR/PR at Table SPB-III-5. We agree with SKF that one company, ***, which accounted for only *** percent of U.S. SPB production, *** that negatively impacted the overall financial data, but we consider the industry as a whole, which includes the performance of that company, in making our finding that the domestic industry is not vulnerable. SKF Prehearing Brief at 102.

[459] CR/PR at Table C-3.

DISSENTING VIEWS OF CHAIRMAN DANIEL R. PEARSON

I. INTRODUCTION

Section 751(d)(2) of the Tariff Act of 1930, as amended ("the Act"), requires that the U.S. Department of Commerce ("Commerce") revoke a countervailing duty or an antidumping duty order or terminate a suspended investigation in a five-year review unless Commerce determines that dumping or a countervailable subsidy would be likely to continue or recur and the U.S. International Trade Commission ("Commission") determines that material injury to a U.S. industry would be likely to continue or recur within a reasonably foreseeable time.[1] Based on the record in this second five-year review, I determine that material injury is not likely to continue or recur within a reasonably foreseeable time if the antidumping duty order on subject imports of tapered roller bearings ("TRBs") from China is revoked.

I join my colleagues' discussion regarding domestic like product and domestic industry. I write separately to discuss conditions of competition, and to provide an analysis of the statutory factors.

II. SUMMARY

Although an antidumping duty order has been in place on subject imports of TRBs from China since June 1987, now almost twenty years, subject imports have consistently been at small volumes and held a small share of apparent U.S. consumption measured in value,[2] both pre-order, during annual years surveyed in the original investigations, 1983 to 1986, the first review period, 1997 to 1998, and this second review period, 2000 to 2005. In all those years, subject import volume, measured in value on an annual basis, never exceeded $***, in 1997, and never accounted for more than *** percent of the market which occurred in ***. Although the domestic industry, which is *** by The Timken Company ("Timken"),[3] argues that there is excess capacity in China that could surge into the U.S. market if the order were revoked, subject imports are at such low volume and market share that even if they did increase to a modest degree, they would still account for a small share of apparent domestic consumption. Further, the Chinese home market demand for TRBs has been expanding, and subject import volume and Chinese exports to the United States relative to other markets has decreased since the first review.

Moreover, even if subject imports were to increase, there are several factors that lessen any impact they would have on the U.S. market. Apparent U.S. consumption of TRBs has expanded, especially since 2003; increased demand has resulted in tight supply conditions; and several important TRB purchasers have been placed on allocation. Further, the record reflects that competition between subject imports and the domestic product is limited in the U.S. market. They differ in physical characteristics, the channels of distribution in which they are sold, the purchasers to which they are sold, the extent to which they are certified, and they sell at significantly different prices.

Subject imports are underselling the domestic like product, but they are not causing domestic prices to decrease. In fact, domestic prices are going up. Furthermore, there is little evidence of a cost/price squeeze. The COGS/sales ratio fluctuated between *** percent in 2000 and *** percent in 2003, before decreasing steadily to *** percent in 2005.[4] These data reflect that the domestic industry has been successful in covering its costs, and that low-priced subject imports have not been keeping

---

[1] 19 U.S.C. § 1675(d)(2).

[2] As I have done in the ball bearings and spherical plain bearings second reviews, I have tended to rely on value over quantity data in measuring volume in these bearings investigations due to the inherent risks in relying on quantity data due to product mix issues. Unit values may vary from a few cents to thousands of dollars, reflecting differences in size, manufacturing tolerances, and other variables. CR at Overview 9-10; PR at Overview 8.

[3] Timken has jointly filed various submissions in these proceedings with Pacamor Kubar Bearings, UAW and USW. For ease of reference, we refer to their submissions as "Timken's" submissions.

[4] CR/PR at Table C-1.

domestic producers from raising prices. The average unit values ("AUV"s) of subject imports are much lower than those of the domestic like products, but are quite similar to AUVs of nonsubject imports from China. This suggests that lifting the order would lead to increased competition in the U.S. market between subject and nonsubject imports from China. However, that competition would not likely have a negative influence on prices of the domestic like products.

Finally, the domestic industry is not vulnerable. It has been profitable and its shipments and sales measured in value have increased in the review period. It has lost market share, but only to nonsubject imports, not subject imports. As I explain in more detail below, I do not find that revocation of the antidumping duty order on TRBs from China would be likely to lead to continuation or recurrence of material injury to an industry in the United States within a reasonably foreseeable time.

III. LIKELIHOOD OF CONTINUATION OR RECURRENCE OF MATERIAL INJURY IF THE ORDERS ARE REVOKED

A. Conditions of Competition

In the original investigations, the majority of the Commission cumulated subject imports from China, Hungary, Romania, and Yugoslavia with those from Japan and Italy despite its recognition of some quality differences between the products. These quality differences included the lower quality load carrying ability and wear resistance of TRBs from China, Hungary, Romania, and Yugoslavia compared to the domestic like product and TRBs from Japan and Italy. The Commission noted that domestic bearings were "'case hardened' which . . . allows the bearing to better absorb the forces to which it is subject, while many of the imports are 'through-hardened' which results in a more brittle bearing that does not last as long." [5]

In the first reviews, the Commission found that demand for TRBs had grown considerably since the original investigations, and that Timken was the *** domestic producer, as it has been in this review. The Commission found that in the original equipment manufacturer ("OEM") segment of the market, quality, availability, and other non-price factors were as important as price in purchasing decisions, although "TRBs of a similar type, size, and configuration," were generally interchangeable regardless of country of origin. OEMs often required certifications, and were not likely to change suppliers merely on the basis of price. The Commission found that Chinese producers of subject TRBs competed at the low-end commodity segment of the U.S. TRB market where price was a particularly important factor in purchasing decisions.[6]

In evaluating the impact of subject imports on the domestic industry if the order is revoked, the statute directs the Commission to evaluate all the relevant economic factors "within the context of the

---

[5] USITC Pub.1983 at 13-14 & n.45. Contrary to Timken's arguments, however, the fact that the Commission cumulated subject imports from China with other subject imports in the original investigation does not detract from my finding that there is limited competition between subject imports from China and the domestic like product. Cumulation and causation are "functionally different inquiries because they serve different statutory purposes." See Committee of Domestic Steel Wire Rope and Specialty Cable Manufacturers v. United States, 201 F. Supp. 2d 1287, 1298-99 (Ct. Int'l Trade 2002). See also BIC Corp. v. United States, 964 F. Supp. 391, 397, 399 (Ct. Int'l Trade 1997). The fact that the Commission acknowledged these differences as early as the original investigations only lends support to my conclusions.

Moreover, one dissenting Commissioner in the original investigations found that subject imports from China, Hungary and Yuguslovia were "through hardened" instead of "case hardened," which made them less able to absorb shock, and less wear-resistant. That Commissioner found that these subject TRBs were "sold almost entirely into the segments of the marketplace with the least demanding applications -- the so-called 'low-end' of the bearing marketplace,'" and that the "vast majority" of the TRBs from these countries were put to different uses than TRBs from the United States, Japan, and Italy. USITC Pub. 1983 at 50-53.

[6] USITC Pub. 3309 at 23-25, 27.

business cycle and conditions of competition that are distinctive to the affected industry."[7] The following conditions of competition were significant in my determination.

Demand. Demand for TRBs is generally a function of overall U.S. economic activity, which has recently been strong. U.S. gross domestic product ("GDP") grew solidly in 2000, softened during 2001 to 2002, regained strength in 2003, and grew at over six percent annually from 2003 to 2004, and from 2004 to 2005. The OECD has forecast near-term growth similar to the growth in 2004 and 2005.[8] The growth in apparent U.S. consumption for TRBs measured in value during the review period mirrored growth in U.S. GDP. Apparent U.S. consumption for TRBs measured in value increased by $*** or by *** percent from 2000 to 2005; it declined from 2000 to 2001, and then began to increase in 2002, and accelerated from 2003 to 2005. The rate of increase in apparent U.S. consumption demand from 2003 to 2004 was *** percent per year, and from 2004 to 2005, it was *** percent.[9]

The record reflects that several of the major end-use industries in which TRBs are used, automotive, aerospace and construction, are currently experiencing growth, and that these industries are expected to prosper in the near future. The exception to this forecast is the truck market, which has recently experienced record growth, but which is expected to slow down in the near future.[10] Seventeen out of twenty purchasers reported to the Commission that demand for their final products incorporating TRBs had increased, sometimes citing increased automotive production. One purchaser cited not only increasing demand but increased use of TRBs per vehicle. Other market participants referenced strong automotive, truck, mining, construction, and industrial markets. Although Timken and Eaton have stated that truck demand will taper off or decrease in the future, and *** has stated that demand for high volume TRB products has decreased,[11] I find that the high level of demand for TRBs in the U.S. market is likely to continue in the reasonably foreseeable future.

Demand for TRBs is inelastic.[12] The cost of TRBs is quite small compared to the cost of the final products incorporating them, such as automobiles and airplanes. No substitutes are available.[13]

Supply. Strong demand for TRBs coupled with raw material cost increases and steel shortages have resulted in tight supply conditions for TRBs and in widespread purchaser allocations. Twenty-three TRB purchasers reported that they had experienced a supply shortage of TRBs and/or been placed on supply allocation. Seven purchasers denied supply problems. At the hearing, purchasers Eaton, Caterpillar and Deere reported being placed on allocation by Timken, and that these allocations had caused lost sales and business disruptions.[14]

---

[7] 19 U.S.C. § 1675a(a)(4)

[8] CR at TRB-II-9; PR at TRB-II-6.

[9] CR/PR at Table C-1.

[10] The U.S. auto market remains the largest in the world, and the Bureau of Labor Statistics expects output to grow over the next ten years. North American auto production has remained steady despite decreases in production by Ford and GM due to increased production by foreign-owned firms. Demand for trucks has recently been at record levels, and may soften in the near future to more normal levels. CR at TRB-II-10; PR at TRB-II-6.

The Aerospace Industries Association estimated industry growth at *** percent between 2004 and 2005, and forecasts growth of *** percent for 2006. CR at TRB-II-10; PR at TRB-II-6.

Contractors and construction equipment distributors are optimistic about the financial performance of the construction industry. CR at TRB-II-10; PR at TRB-II-6. *** anticipated that construction equipment demand would be up 10 percent in 2006 from 2005. CR at TRB-II-13; PR at TRB-II-8.

[11] CR at TRB-II-11-12; PR at TRB-II-7-8.

[12] CR at TRB-II-26;PR at TRB-II-18.

[13] CR at TRB-II-13-14; PR at TRB-II-8-9.

[14] CR at TRB-II-3-4; PR at TRB-II-2-3.

The domestic industry dominates the U.S. market, holding a market share of *** percent measured in value in 2005, and Timken, in turn, *** the domestic industry, accounting for *** percent of the value of reported U.S. shipments of TRBs in 2005.[15] Timken imports *** TRBs.[16] It is also a producer and *** of TRBs in China.[17] Besides Timken, there are six other domestic producers, almost all of whom are foreign-owned, and each of which accounted for less than *** percent of domestic production in 2005.[18] One producer, *** began producing TRBs in 2001, and another producer, ***, is closing its U.S. TRB production facility.[19]

Subject imports held a market share of *** percent in 2005,[20] nonsubject imports from China a market share of *** percent, and total nonsubject imports, including those from China, a market share of *** percent, with the remaining share of the market, *** percent, being held by the domestic industry.[21] The total volume of imports in the U.S. market has increased over the review period, due almost entirely to an increase in nonsubject imports. Nonsubject import volume has increased from $*** in 2000 to $*** in 2005.[22] I find that these supply conditions are likely to continue in the U.S. market for the reasonably foreseeable future.

Channels of Distribution. The record reflects that domestically produced TRBs and subject imports are sold in largely separate channels of distribution, commonly to different purchasers, and that purchasers of the domestic like products are more likely to require certifications.

Approximately *** percent of domestic producer U.S. shipments of TRBs, and *** percent of subject import U.S. shipments of TRBs, are standard products. The rest are custom TRBs.[23] With respect to standard TRBs, *** domestically produced TRBs were shipped to the OEM automotive segment, while *** subject imports were shipped to the "all other" OEM market segment. Thus, although *** of domestically produced TRBs and subject import TRBs were standard, and shipped to OEMs/end users, in fact, they were shipped to very different customers.[24]

The *** customized segment of the market also reflects differences in the markets served by the domestic like product and subject imports. Domestically produced TRBs were *** sold to agricultural

---

[15] CR/PR at Table TRB-I-7 and Table TRB-I-10.

[16] CR/PR at Table TRB-III-5. Timken's imports of *** have increased over the review period. *** imports imported by Timken, the *** U.S. producer, increased by $***over the period of review, while total *** imports increased by $***. Thus, Timken accounted for *** percent of the increase in *** import volume over the period of investigation. Calculated from CR/PR at Table TRB-IV-1 and CR/PR at Table TRB-III-5.

Timken imported $*** in *** in 2005 and $*** in 2000. CR/PR at Table TRB-III-5.

[17] CR/PR at Table TRB-IV-3.

[18] The record does not reflect that ***, which accounted for *** percent of U.S. shipments of TRBs in 2005, is foreign-owned. CR/PR at Table TRB-I-7.

[19] CR at TRB-III-12, TRB-III-15, n.14; PR at TRB-III-4, TRB-III-4, n.14.

[20] *** is the single largest U.S. importer of subject TRBs from China, accounting for *** percent of reported subject U.S. imports in 2005, followed by *** accounting for *** percent and *** accounting for *** percent. CR/PR at Table TRB-I-9.

[21] CR/PR at Table TRB-I-10.

[22] CR/PR at Table TRB-I-10.

[23] CR at TRB-I-17; PR at TRB-I-14.

[24] CR at TRB-I-16-17, PR at TRB-I-14 & CR/PR at Table TRB-I-5. The domestic industry discounts the data in Table TRB-I-5 as being "incomplete," and "not credible," but in fact, the table is supported by questionnaire responses by importers of subject merchandise. Id. at CR at TRB-I-17, n.25; PR at TRB-I-14, n.25.

and construction mining OEMs and to automotive OEMs, while subject imports were shipped *** to the automotive aftermarket.[25]

These channel of distribution data are consistent with purchaser questionnaire responses which reflect limited overlap in customers for subject imports and the domestic like product. Of the twenty-six purchasers that identified the country of origin of their TRB purchases during the review period, nineteen (73.1 percent), stated that they purchased domestic TRBs but not Chinese TRBs (subject or nonsubject). Six purchased Chinese TRBs, and four of those six purchasers purchased domestic TRBs, Chinese TRBs, and nonsubject country TRBs. One purchaser only purchased nonsubject country TRBs.[26] Although there is some customer overlap, these data reflect that it is limited. Further, purchasers can be slow to change suppliers.[27]

The domestic industry is more likely to sell to purchasers that require certification, although a significant number of importers also sell to such purchasers. Timken reports that *** percent of its sales in 2005 were to customers that required certification or prequalification, and that the aftermarket does not require certification or prequalification.[28] Six domestic producers and nine importers responded that 70 percent or more of their sales are to customers that require certification, while nine importers responded that less than 30 percent of their sales were to such customers. In other words, for half of the responding importers, 70 percent of their sales went to purchasers that did not require certifications, while only 30 percent of the domestic industry sales went to such purchasers.[29] Although twenty-six purchasers reported that no suppliers had failed to receive approval, *** stated that Chinese firms *** had failed qualifications for reasons of quality.[30]

Interchangeability. Nine purchasers responded that subject TRBs from China were always or frequently interchangeable with the domestic like product, and six responded that they were sometimes or never interchangeable.[31] CCCME, Timken, and other market participants, including purchasers, provided additional evidence reflecting limited interchangeability.[32]

CCCME argues that Chinese TRBs are made of through-hardened steel, whereas the domestic like product is made of case-carburized steel. CCCME maintains that the case-carburized steel input costs more, which makes the case-carburized TRB more expensive to produce, and results in it being priced higher than through-hardened TRBs. Case-carburized TRBs, however, are more durable, and can withstand heavy shock loads without damage.[33] There is evidence from the original investigations that case-carburized bearings are less likely to fail by fracturing under stress, and are thus preferable from a safety standpoint than through-hardened bearings.[34] Among U.S. producers, *** TRB production is ***

---

[25] CR/PR at Table TRB-I-5. The pricing data collected by the Commission is consistent with a limited overlap in channels of distribution. Very few of the subject imports from China were sold to end users with respect to the products surveyed, but only to distributors, whereas the domestic like product was sold to both end users and distributors. CR/PR at Table G-1-G-10.

[26] CR at TRB-II-24; PR at TRB-II-16.

[27] CR at TRB-V-4; PR at TRB-V-3.

[28] Timken Posthearing Brief, Answers to Commission Questions, Koplan 21.

[29] CR at TRB-II-20; PR at TRB-II-14.

[30] CR at TRB-II-20 & n.49; PR at TRB-II-14 & n.49.

[31] CR at Table TRB-II-4.

[32] CR at TRB-II-22-24; PR at TRB-II-15-16.

[33] CCCME Final Comments at 3-4.

[34] USITC Pub. 1983, Appendix D.

percent case-carburized while *** is *** percent case-carburized.[35] Together, *** accounted for *** percent of U.S. producers' U.S. shipments of TRBs in 2005.[36]

Domestic producers Timken and ***, which exclusively produce case-carburized bearings, have largely corroborated CCCME's arguments. At the hearing, a Timken representative displayed a U.S. and a Chinese TRB that he described as equivalent for most end uses. He stated that although the Chinese TRB would be about 50 percent less expensive, the U.S. TRB would last five to ten times as long, and users with low load applications would not want to pay for the higher-priced bearing.[37] Producer *** states that for light-load applications, Chinese and U.S. TRBs are interchangeable, but that for heavy-load applications, they are not interchangeable. *** also reported that Chinese TRBs tend to be lower-priced and widely available.[38] *** said that large, carburized TRBs are usually only available from U.S. producers, while imports are usually through-hardened, leaving such TRBs less impact resistant.[39]

Non-price factors, as well as price, are very important in purchasing TRBs, as was recognized in the first review.[40] The country of origin is sometimes a basis for purchasing decisions. Fifteen out of 32 purchasers reported that certain grades or types of TRBs were only available from a single country source.[41] Certifications are important in this industry, which was also recognized in the first reviews. Twenty-two purchasers reported that they required certification or qualification of their suppliers for 80 percent or more of their purchases. Eight purchasers required no certification. The qualification process can involve reviewing supplier quality, supplier capacity, and delivery reliability, among other factors.[42] Certification takes generally six months to two years, although this can vary depending on the part and the application.[43]

The automotive OEM sector is a very important sector for domestic like products, but not particularly important for subject imports.[44] CCCME maintains that subject imports are not in this important segment of the market because to be in the market they need to be certified, and to be certified, they need to be case-carburized.[45] Timken argues that Chinese producers have the ability to become certified, but it does not directly dispute CCCME's allegation that by and large the large automotive OEMs have not certified subject Chinese producers.[46] For example, Timken states that multinational

---

[35] CR at TRB-II-23, n.55; PR at TRB-II-16, n.55.

[36] CR/PR at Table TRB-I-7.

[37] CR at TRB-II-23, n.54; PR at TRB-II-16, n.54; Tr. at 88.

[38] CR at TRB-II-22; PR at TRB-II-15.

[39] CR at TRB-II-21; PR at TRB-II-15. *** stated that large, carburized TRBs are usually only available from U.S. producers, while imports are usually through-hardened, leaving such TRBs less impact resistant. CR at TRB-II-21, n.52; PR at TRB-II-14, n.52.

[40] CR/PR at Table TRB-II-1, CR at TRB-II-17, n.47; PR at TRB-II-11, n.47. CR/PR at Table II-2. A majority of producers stated that non-price factors were frequently important in purchasing TRBs, and a majority of importers stated that non-price factors were always or frequently a factor in purchasing TRBs. CR/PR at Table TRB-II-5. None of the purchasers in this second review reported that they always purchase the TRBs offered to them at the lowest price. When asked why purchasers had purchased more expensive TRBs when less expensive TRBs were available, purchasers emphasized quality, supplier reliability and capacity, lead time, long-term agreements, and the cost to approve new suppliers. CR at TRB-II-21; PR at II-14.

[41] CR at TRB-II-21; PR at TRB-II-14.

[42] CR at TRB-II-20; PR at TRB-II-13-14.

[43] Timken Posthearing Brief, Answers to Commission Questions, Koplan 9-10.

[44] CR/PR at Table TRB-I-5.

[45] CCCME Posthearing Brief at 4, 7.

[46] Timken Posthearing Brief, Answers to Commission Questions, Koplan at 10-11. Timken argues for example that Chinese producers have succeeded in placing ball bearings, not TRBs, with major OEMs Deere and Delphi. Id.

(continued...)

TRB producers are trying to qualify their Chinese TRBs with U.S. OEMs.[47] Although Timken states correctly that ***, none of these sales were reported as being shipped to the automotive OEM market, but rather to the "OEM all other" market or the aftermarket.[48]

Further, purchasers are slow to change suppliers, and larger purchasers often have long term contracts of one to five years.[49] Purchasers *** stated that changing suppliers is an infrequent occurrence for them because of qualification issues.[50] Thus, purchasers for whom quality and certification issues are critical, or who have long-term contracts, would not be likely to turn immediately to subject imports for their supply of TRBs if the order were revoked.

Average unit values of the subject imports are much lower than that of the domestic like product, and other nonsubject imports, but similar to those of nonsubject imports from China in the U.S. market in recent years.[51] These data suggest that the subject imports are similar to the nonsubject products being shipped from China, but differ markedly from the domestic like product and other nonsubject imports. The average unit value for subject imports from China in the U.S. market has been below $*** throughout the period of review. The average unit value for nonsubject imports from China has also been under or just above $*** since 2003. The average unit value for other nonsubject imports, however, have all been much higher; the closest, the United Kingdom, had an average unit value of $4.34 in 2005.[52] Unit values for U.S. producers' domestic shipments of TRBs in the U.S. market were also much higher than unit values for subject imports, $*** in 2005, and they had increased over the period of review from $*** in 2000.[53] Moreover, I note that the average unit values of Chinese shipments to its home market and other export markets are much higher than its export shipments to the U.S. market.[54] These data suggest that the Chinese producers have the ability to ship higher value TRBs to other markets besides the U.S. market, but that they have focused on the lower-value TRB segment in the U.S. market. I note that in the first reviews, the Commission found that Chinese producers competed in the low-end of the U.S. TRB market.

For all of the foregoing reasons, I conclude that there would likely be limited competition between subject imports and the domestic like product for the reasonably foreseeable future if the order on TRBs from China were revoked. Subject imports and the domestic like product moved in largely different channels of distribution, and were commonly sold to different customers, which often had different requirements with respect to certification. Moreover, there is evidence that subject imports and the domestic like product differ physically and that these differences affect the quality of the TRBs, which purchasers consider the most important factor in purchasing TRBs.

---

[46] (...continued)
Delphi, however, has ***. CR at TRB-II-24; PR at TRB-II-16.

[47] CR at TRB-II-20, n.50; PR at TRB-II-14, n.50.

[48] Timken Posthearing Brief, Answers to Commission Questions, Koplan 19, ***. As for the ***.

[49] CR at TRB-V3-V4; PR at TRB-V-3.

[50] CR at TRB-V-4; PR at TRB-V-3.

[51] CR/PR at Table TRB-IV-1.

[52] CR/PR at Table TRB-IV-1.

[53] CR/PR at Table TRB-III-3.

[54] CR/PR at Table TRB-IV-4.

D. Revocation of the Antidumping Duty Order on Subject Tapered Roller Bearings from China is Not Likely to Lead to a Continuation or Recurrence of Material Injury Within a Reasonably Foreseeable Time

1. Likely Volume of Subject Imports

In the original investigations, the Commission cumulated subject imports from China with subject imports from five other countries, and found that the cumulated subject imports had a large and stable volume and market presence in the U.S. market, at a time of declining shipments by the U.S. industry.[55] The volume data upon which I base my decision are materially different from the cumulated data before the Commission in the original investigations, due to the fact that subject imports from China are now the only TRB imports subject to an antidumping duty order.

In the first reviews, the Commission found that the volume of subject TRB imports from China would likely be significant in the reasonably foreseeable future, if the order was revoked, due to increased subject import volume since the original investigations, excess capacity in China, the fact that approximately two-thirds of the exports from China were shipped to the United States, and the fact that subject TRB imports from China competed at the price-sensitive, low-end commodity segment of the U.S. TRB market.[56]

Subject imports from China accounted for *** percent of apparent domestic consumption in 2005, measured by value. Throughout the original investigations, the first reviews and this second review, subject imports from China have held a *** role in the U.S. market, regardless of demand fluctuations, and the dramatic recent increase in demand that began in 2003. On a value basis, in the original investigations, 1983 to 1986, subject TRB imports from China increased from $989,000 in 1983 to $1.8 million in 1984, before decreasing to $955,000 in 1985 and decreasing further to $830,000 in 1986. Subject imports from China steadily held a *** percent of apparent U.S. consumption, measured by value, during the original investigations, as demand fluctuated between $*** and $***. In contrast, U.S. shipments of the domestic like product, measured by value, ranged from $*** to $***, and the domestic industry held a U.S. market share *** throughout the original investigations.[57]

In 1997 and 1998, these relative market positions did not materially change. However, apparent U.S. consumption increased relative to the level of consumption in the original investigations, and subject imports and domestic shipments increased in tandem with demand. Subject imports from China increased to $27.2 million in 1997 before decreasing slightly to $23.8 million in 1998. They continued to hold a small share of the U.S. market, 2.1 percent in 1997 and 1.7 percent in 1998, as apparent U.S. consumption increased to $1.3 billion in 1997 and $1.4 billion in 1998. U.S. shipments of the domestic like product were $*** in 1997 and 1998, and the domestic industry held a market share of 82.3 percent in 1997 and 80.2 percent in 1998.[58]

In this review period, subject imports have generally been at lower levels than in the 1997 to 1998 period. Subject imports increased in value from $*** in 2000 to $*** in 2001 and then further to $***, before decreasing sharply to $*** in 2003, increasing to $*** in 2004 and further to $*** in 2005. Apparent U.S. consumption from 2000 to 2003 was lower than the level of consumption in 1998, but as I have already discussed, it increased steadily on an annual basis from 2001 to 2005, and it was higher in 2004 and in 2005, when it reached $***, than in 1998.[59] Apparent domestic consumption increased by

[55] USITC Pub. 1983 at 14-15.

[56] USITC Pub. 3309 at 26-27.

[57] CR/PR at Table TRB-I-1.

[58] CR/PR at Table TRB-I-1.

[59] CR/PR at Table TRB-I-1.

*** percent from 2001 to 2002, *** percent from 2002 to 2003, *** percent from 2003 to 2004, and by *** percent from 2004 to 2005.[60]

The dramatic increase in apparent U.S. consumption from 2003 to 2005 had little effect on subject import volumes, which stayed below *** levels during this period, and lost *** percent market share in terms of value, from 2004 to 2005.[61] Subject imports' U.S. market share increased from *** percent in 2000 to *** percent in 2002, before declining and fluctuating between *** and *** percent between 2003 and 2005.[62]

The domestic industry lost *** percentage points of market share measured in value from 2000 to 2005 during a time of dramatically increasing apparent domestic consumption. The industry, however, lost market share to nonsubject imports, not subject imports. Subject imports lost *** percentage points of market share from 2000 to 2005. Nonsubject imports, in contrast, gained market share by *** percentage points.[63]

Our foreign questionnaires were transmitted to 41 producers or exporters of TRBs from China.[64] Both CCCME and Timken agree that our data do not account for all TRB producers in China, but they disagree as to the size of the industry.[65] We received usable responses from 13 TRB producers/exporters in China.[66] Only five of these responding firms exported TRBs to the United States in 2005.[67] The value of subject exports to the United States from all of the responding firms accounted for *** percent of U.S. imports of TRBs from China.[68] Therefore, although the size of the Chinese industry is unclear, our data cover firms that accounted for most of the exports to the United States in 2005.

The available data on the Chinese industry show that production and capacity doubled over the review period. However, China's economy is expanding, and demand for TRBs has mirrored the expanding Chinese economy and its increased demand for automobiles.[69] The share of Chinese shipments of TRBs directed to the home market and Asia increased by several percentage points over the review period, but the share of exports being shipped to the United States declined.[70] Chinese exports to the United States have fluctuated over the review period, and were lower in 2005 than in 2004,

---

[60] CR/PR at Table C-3.

[61] CR/PR at Table TRB-I-10.

[62] CR/PR at Table TRB-I-10. The ratio of subject imports to U.S. production of TRBs followed similar trends; it increased from *** percent in 2000 to *** percent in 2002, before declining and fluctuating between *** percent and *** percent from 2003 to 2005. CR/PR at Table TRB-I-11.

[63] CR/PR at Table C-1.

[64] CR at Overview-26; PR at Overview 19.

[65] CCCME maintains that there are 63 TRB producers in China and 51 Chinese exporters of TRBs, although not all of these exporters sell to the United States. Timken maintains that there are *** TRB producers in China. CR at TRB-IV-14; PR at TRB-IV-10-11.

[66] We received usable responses from the following subject Chinese producers: 1) China National Machinery Import & Export Corp./Yantai CMC; 2) Hangzhou Jingshou Bearing Co., LTD/HJH; 3) Harbin Bearing Group Corp./HRB; 4) Luoyang Bearing Corp. (Group)/LYC; 5) Schaeffler Group; 6) Shanghai SKF Automobile Bearing/Beijing Nankou SKF; 7) Shanghai United Bearing Co., LTD./SUBC; 8) Timken-NSK Bearings (Suzhou) Co., Ltd.; 9) Wanxiang Group; 10)Xiangyang Automobile Bearing Co., Ltd./ZXY; 11) Xibei Bearing Group Import & Export Co., Ltd/NXZ; 12) Yantai Timken Co., Ltd.; and 13) Zhejiang Changshan Changhe Bearing Co., Ltd/NXZ. CR/PR at Table Overview 4.

[67] CR/PR at Table TRB-IV-3.

[68] CR/PR at TRB-IV-9.

[69] CR at TRB-IV-7, TRB-IV-13 and TRB-IV-15; PR at TRB-IV-6, TRB-IV-10-11.,

[70] CR/PR at Table TRB-IV-4. The share of Chinese shipments to the home market increased from 58.7 percent of all shipments in 2000 to 62.7 percent of all shipments in 2005; the share of shipments to Asia increased from *** percent to *** percent; the share of shipments to the United States decreased from *** percent to *** percent.

notwithstanding strong U.S. demand. Chinese exports have never exceeded $*** in value over the review period, despite the fact that capacity and production have doubled since 2000.[71]

Domestic producers argue that if the order were lifted, subject imports would behave similarly to nonsubject imports, and increase by *** percent in the reasonably foreseeable future.[72] I do not find that likely due to the attractiveness of the Chinese home market which is experiencing unprecedented demand, and the attractiveness of other markets in which Chinese producers are selling their higher-value TRBs. Subject Chinese producers have significantly decreased exports to the United States relative to other markets, and demand for TRBs in China has increased.

I acknowledge, however, that a modest increase in subject import volume may occur in the reasonably foreseeable future if the order were lifted, and that increase may seem large relative to current subject import volume. For example, even if subject imports were to increase by 300 percent, subject imports would still only account for *** percent of the U.S. market, as a ratio of apparent U.S. consumption in 2005. Subject imports were *** share of apparent U.S. consumption measured by value throughout the original investigations, the first reviews, and this review, and I find it unlikely that they would surge from such low levels to significant volume levels in the U.S. market if the order on TRBs were revoked.

Moreover, the limited competition between subject imports and the domestic like product lessens the significance of any increase in subject import volume. Although there is clearly some competition between subject imports and the domestic like product in the lower-value segment of the U.S. market, subject imports are not likely to compete in segments of the market that require case-carburized bearings and certifications. Although Timken argues that increased subject import volume will place downward pressure on prices, as I discuss below, subject import prices and domestic prices appear to be virtually independent of each other.

Other conditions of competition also tend to lessen the significance of any increase in subject import volume. Apparent domestic consumption measured in value has increased dramatically over the period of review. Many of the domestic industry's customers are on allocation. Nonsubject imports have dramatically increased and gained market share at the expense of both the domestic industry and to a much lesser extent, subject imports.[73] Nonsubject imports from China, which appear to compete much more directly against subject imports in the U.S. market than the domestic like product, have increased.[74] Timken, the *** domestic producer, has accounted for approximately *** of the increase in *** import volume over the review period, and some of the likely increase in subject import volume may come from Timken itself, which would presumably not injure the largest domestic producer.

For all of the foregoing reasons, I do not find that it is likely that subject import volume will be significant, either in absolute terms or relative to consumption or production in the United States, if the order is revoked.

---

[71] CR/PR at Table TRB-IV-4.

[72] Timken posthearing brief at 5. Timken also argued that subject imports would increase by *** percent in a few years, as nonsubject TRB exports from China increased at that rate from 2003 to 2005. However, I find that the increase in nonsubject exports from China from 2003 to 2005 is likely to have been spurred in large part by the surge in U.S. demand that took place at that time. For example, Shanghai General was excluded from the order in 1997. Its exports decreased by $*** from 2000 to 2001, increased by $*** from 2001 to 2002, and then again by $*** from 2002 to 2003, before experiencing a substantial increase from 2003 to 2004, $***, and from 2004 to 2005, $***, at the same time as demand also dramatically increased. Exports to the United States by Tianshui Hailan increased in 2002, the year in which it was excluded from the order, but they also increased in 2004 and 2005. CR at TRB-IV-4-5; PR at TRB-IV-4 (Commerce data on exports).

[73] CR/PR at Table C-1.

[74] CR/PR at Table IV-1.

2. Likely Price Effects of Subject Imports

In performing my analysis, I have taken into account the Commission's price findings in the original investigations, and in the first review. In the original investigations, the Commission found general price decreases during the period of investigation and nearly universal underselling by cumulated subject imports. The Commission also found that there was competition with the domestic like product, that subject imports were purchased because of lower prices, and that prices in the U.S. market were trending downward. Moreover, the Commission found that prices had been insufficient to cover domestic producers' operating costs.[75]

In the first reviews, the Commission found that revocation of the antidumping duty order on China would likely lead to significant underselling by the subject imports of the domestic like product, as well as significant price depression and suppression within a reasonably foreseeable time. The Commission stated that the "limited pricing data collected in these reviews" established "uniform underselling by Chinese subject imports, even with the order in place."[76] The Commission found that the Chinese subject imports competed "in the price-competitive, commodity segment of the TRB market;" and concluded that should the order be revoked, Chinese producers would likely price "aggressively to gain additional market share."[77]

As already discussed, I find that interchangeability between subject imports and the domestic like product is limited, and results in limited competition between subject imports and the domestic like product. Purchasers are slow to change suppliers, and long term contracts can bind larger purchasers.

In the current review, the Commission collected quarterly weighted-average sales price data on ten TRB products from domestic producers and importers on sales to unrelated customers in the U.S. market. Four U.S. producers *** and seven importers provided usable pricing data for sales of the requested products, although not all firms reported pricing for all products for all quarters.[78]

Subject imports undersold the domestic like product in 97.8 percent of all price comparisons (222 instances of underselling in 227 possible price comparisons), at margins ranging from 0.6 percent to 96.6 percent. In 210 of the 227 price comparisons, the margins of underselling were over 50 percent.[79] Subject imports from China are sold at stable prices that are consistently so much lower than domestic prices that subject imports do not appear to be competing with domestic like products on the basis of price.[80]

Further, the pricing data do not show any significant effect of the underselling on prices for the domestic like product. Despite consistent underselling by large margins, both domestic prices and subject import prices resemble for the most part two parallel lines. They may have an occasional fluctuation, and some of the price series reflect domestic prices trending upward, either slowly or with some volatility, but these parallel lines appear to be independent of each other.[81] The only exception is the pricing data with

---

[75] USITC Pub. 1983 at 16.

[76] USITC Pub. 3309 at 27.

[77] USITC Pub. 3309 at 27.

[78] Pricing data reported by these firms accounted for 1.8 percent of U.S. shipments of U.S. product, and 9.2 percent of U.S. shipments of Chinese product in 2005, by value, and approximately 9.8 percent of U.S. producers' shipments of TRBs and 26.4 percent of U.S. shipments of subject imports from China in 2005, by quantity. CR at TRB-V-6-8, PR at TRB-V-5; CR at TRB-V-7, n.18; PR at TRB-V-5, n.18. I note that coverage was also relatively low during the first review, and that this is not surprising given the wide variety of TRB products.

[79] CR/PR at Table TRB-V-2, CR/PR at Table G-1-G-10.

[80] CR/PR at Figure TRB-V-1, Figure TRB-V-3, Figure TRB-V-5, Figure TRB-V-7, Figure TRB-V-9, Figure TRB-V-11, Figure TRB-V-13, Figure TRB-V-15, and Figure TRB-V-19.

[81] CR/PR at Figures TRB-V-1-V-20.

respect to Product 7, the only pricing series in which subject imports oversold the domestic like product.[82]

There is no indication that subject imports that are in the U.S. market are depressing prices for the domestic like product, or that they are likely to do so in the reasonably foreseeable future. The significant underselling is not causing prices to decrease. To the contrary, domestic prices are generally increasing, and they seem to move almost universally independently of subject import prices.

Furthermore, there is no evidence that subject imports have been suppressing domestic prices, or that they are likely to do so in the reasonably foreseeable future. Although the domestic industry's unit cost of goods sold ("COGS") increased by *** percent from 2000 to 2005, its COGS to net sales ratio generally kept up with the increasing costs. The domestic industry's COGS to net sales ratio only increased by *** percentage points over the review period; it fluctuated within a narrow range over the review period, and it has decreased since 2003.[83] These data reflect that the domestic industry has been successful in covering its rising costs, and that subject imports have not prevented them from doing so. Domestic producers and importers report that they have been able to pass increased raw material costs to purchasers, either in the form of surcharges or raised prices. *** indicated that it had assessed a surcharge to cover raw material costs, which had been accepted by and large by its industrial customers, but not all of its automotive customers. It added that it was currently trying to convert its surcharges to higher list prices.[84]

The lack of significant price effects is consistent with my finding of limited competition between subject imports and the domestic like product. These data confirm that non-price factors such as quality, are very important to purchasers, and limit the significance of underselling. Timken argues that because demand for TRBs is inelastic, increased subject imports will exert downward pressure on prices.[85] Subject import prices are already far below domestic prices, but subject import prices are not affecting domestic prices. Given the similar average unit values of subject imports and nonsubject imports from China, subject imports from China are more likely to compete directly and aggressively against nonsubject imports from China in the U.S. market, than against the domestic like products, if the order were lifted.

Consequently, despite the fact that I find that there is likely to be significant underselling of domestic prices by the subject imports, I find that any relatively modest increase in subject import volume that may occur if the order were lifted would not likely lead to significant price depression or suppression within a reasonably foreseeable time.

3. Likely Impact of Subject Imports

In the original investigations, the Commission found that the large and stable volume and market penetration of the cumulated subject imports at a time of declining shipments by the domestic industry, coupled with evidence of general price decreases and nearly universal underselling by subject imports at a time of declining U.S. prices, demonstrated that the subject imports were a cause of material injury to the domestic industry.[86]

In the first reviews, the Commission did not find that the domestic industry was vulnerable. It found that the condition of the domestic industry had improved since the order was imposed in 1987.[87] The Commission found, however, that revocation of the antidumping duty order on TRBs from China would likely "lead to a significant increase in the volume of subject imports from China that would

[82] With respect to product seven, prices for subject imports and domestic products are comparable with respect to sales to end users, but only sometimes comparable with respect to sales to distributors. CR/PR at Figure TRB-V-13 and Figure TRB-V-14.

[83] CR/PR at Table C-1.

[84] CR at TRB-V-1-2; PR at TRB-V-1.

[85] Timken Posthearing Brief, Answers to Commission Questions, Koplan at 11.

[86] USITC Pub. 1983 at 15-16.

[87] USITC Pub. 3309 at 28.

undersell the domestic like product and significantly suppress or depress U.S. prices, "[88] which would adversely impact the financial performance of the domestic industry.[89]

As the Commission found in the first reviews, I find that the domestic industry is not vulnerable to injury in this second review. Our data on domestic producers' financial performance is *** which accounted for *** percent of sales quantities and values, and essentially ***.[90] Although there were declines in several of the domestic industry's financial indicators, the domestic industry has been healthy throughout the review period.[91]

The domestic industry experienced *** operating margins from 2000 to 2005, which fluctuated, and decreased overall by *** percentage points over the review period.[92] I note that ***.[93] Capacity, production and capacity utilization declined to some extent over the review period, but capacity utilization remained at relatively high levels, fluctuating between *** percent and *** over the period of review.[94] The domestic industry's U.S. shipments and total shipments measured by value, increased from 2000 to 2005.[95]

The market share of subject imports never exceeded *** percent by value over the review period, and ended the review period at *** percent of apparent U.S. consumption in 2005. The domestic industry's net sales have increased by *** percent over the review period, measured by value.[96] Domestic producer inventories declined over the review period.[97] The domestic industry has lost market share, but the market itself has been expanding. Unit COGS increased over the period of review, but as already discussed, the ratio of COGS to net sales as well as other evidence on the record reflects that the domestic industry was able to increase its prices in tandem with increases in costs.

Although the number of production workers, and the hours worked have declined by *** percent over the period of review, productivity and hourly wages have increased by *** percent.[98] While capital expenditures were lower in 2005 than in 2000, they were higher than in 2001, 2002, and 2004, and they were comparable to capital expenditures in 2003.[99] The domestic industry's return on investment (ratio of operating income to total assets) decreased over the review period, but remained positive. It was *** percent in 2000, *** percent in 2001, *** percent in 2003, *** percent in 2004, and *** percent in 2005.[100]

The domestic industry is profitable, with high capacity utilization, with increasing sales in an expanding market. Quality, and certification requirements, as well as some long-term contracts with

---

[88] USITC Pub. 3309 at 28.

[89] USITC Pub. 3309 at 28.

[90] CR at TRB-III-12; PR at TRB-III-4.

[91] Timken itself appears hesitant to call the industry vulnerable. Timken argues first that the domestic industry's performance "has not been robust," then that the domestic industry is at a stage where it is "susceptible, if not vulnerable, to material injury from significantly increased imports," and finally in a heading in its posthearing brief, indicates that the industry is in fact vulnerable. Timken's Prehearing Brief at 102. Emphasis in original. Timken Posthearing Brief at 3.

[92] CR/PR at Table C-1. Operating income as a percent of net sales was *** percent in 2000, decreasing to *** percent in 2001, increasing to *** percent in 2002, decreasing to *** percent in 2003, increasing to *** percent in 2004, and finally, decreasing *** to *** percent in 2005. CR/PR at Table TRB-III-8.

[93] CR at TRB-III-15 & n.14; PR at TRB-III-4 & n.14.

[94] CR/PR at Table TRB-III-1.

[95] CR/PR at Table TRB-III-3

[96] CR/PR at Table C-1.

[97] CR/PR at Table TRB-III-4.

[98] CR/PR at Table C-1.

[99] CR/PR at Table TRB-III-10.

[100] CR/PR at Table TRB-III-11.

larger purchasers, make it hard to take away domestic industry customers in some areas of the market. I also do not find that the order on TRBs has materially contributed to the current health of the industry. Subject imports have been a marginal part of the market since before the order was imposed.

In conjunction with my findings regarding likely volume and price effects, I find that revocation is not likely to lead to a significant reduction in U.S. producers' output, sales, market share, profits, productivity, ability to raise capital, or return on investments within a reasonably foreseeable time. Subject import volume has been small since the original period of investigation, and even if it tripled after the order were lifted, it would not have a significant adverse affect on a healthy domestic industry operating in an expanding market, at high capacity utilization rates. Subject import prices and domestic prices appear to be independent of each other, so there is no indication that a modest increase in subject import volume would put downward pressure on domestic prices. Subject imports are much more likely to compete against nonsubject imports from China in the U.S. market, which have similar average unit values. Nonsubject imports from countries besides China are more likely to compete directly against the domestic industry in the U.S. market, judging from the similarities in their average unit values. The domestic industry lost market share in an expanding market over the review period, but lost it to nonsubject imports rather than subject imports.

I therefore find that revocation of the order on subject imports of TRBs from China is not likely to lead to the continuation or recurrence of material injury to the domestic industry producing TRBs within a reasonably foreseeable time.

DISSENTING VIEWS OF COMMISSIONER STEPHEN KOPLAN AND COMMISSIONER CHARLOTTE R. LANE WITH RESPECT TO SPHERICAL PLAIN BEARINGS FROM FRANCE

Based on the record in this five-year review, we determine under section 751(c) of the Tariff Act of 1930, as amended ("the Act"), that revocation of the antidumping duty orders on spherical plain bearings ("SPB") from France would be likely to lead to continuation or recurrence of material injury to an industry in the United States within a reasonably foreseeable time. Therefore, we respectfully dissent from the Commission's determination with respect to SPB imports from France and write separately to explain our findings. Except, as noted in the majority opinion, we join the Commission's determinations regarding SPBs with respect to background, domestic like product and domestic industry, and legal standards.

I. REVOCATION OF THE ANTIDUMPING DUTY ORDER ON SPBS FROM FRANCE WOULD BE LIKELY TO LEAD TO CONTINUATION OR RECURRENCE OF MATERIAL INJURY

A. Conditions of Competition

In evaluating the likely impact of the subject imports on the domestic industry, the statute directs the Commission to consider all relevant economic factors "within the context of the business cycle and conditions of competition that are distinctive to the affected industry."[1]

In the first five year reviews,[2] Commissioner Koplan found several conditions of competition relevant, including considerable growth in demand for SPBs since the time of the original investigation, concentration of sales of SPBs in the original equipment manufacturers' ("OEM")/end-user market, that the domestic SPB industry was highly concentrated and capital intensive, and that SPBs are highly specialized products.[3] These conditions for the most part are the same in the second review.

Demand for SPBs during the current period of review is primarily driven by the manufacture of machinery and equipment in a number of industries, including automotive, aerospace, construction, manufacturing, medical (including dental), and mining.[4] The aerospace and construction industries are the most important end-users of SPBs.[5] Industry groups in these sectors have touted recent growth and forecast future industry growth. The aerospace industry reportedly experienced growth at *** between

---

[1] 19 U.S.C. § 1675a(a)(4). Section 752(a)(6) of the Act states that "the Commission may consider the magnitude of the margin of dumping or the magnitude of the net countervailable subsidy" in making its determination in a five-year review. 19 U.S.C. § 1675a(a)(6). The statute defines the "magnitude of the margin of dumping" to be used by the Commission in five-year reviews as "the dumping margin or margins determined by the administering authority under section 1675a(c)(3) of this title." 19 U.S.C. § 1677(35)(C)(iv). See also SAA at 887. Commerce expedited its determinations in these reviews and found that revocation of the antidumping duty orders would be likely to lead to continuation or recurrence of dumping. In its expedited review of the antidumping duty order for SPBs from France, Commerce found likely dumping margins of 39.0 percent for SKF, and an all other rate of 39.0 percent. 70 Fed. Reg. 58183 (Oct. 5, 2005); CR at SPB-I-5. In its last administrative review, Commerce made no duty absorption findings. Id.

[2] Commissioner Lane was not on the Commission at the time of the first review determinations.

[3] USITC Pub. 3309 at 56-57.

[4] CR at SPB-II-7; PR at SPB-II-5.

[5] CR at SPB-II-7; PR at SPB-II-5.

2004 and 2005, and forecast growth of *** in 2006.[6] Construction industry surveys showed high levels of optimism regarding future growth among contractors and construction equipment distributors.[7]

Demand for SPBs strengthened after 2002, and most industry participants expect stable to increasing demand in the near future.[8] During the period of review, apparent U.S. consumption of SPBs by value fluctuated slightly from year to year but increased overall by 34.5 percent from $123.6 million in 2000 to $166.2 million in 2005.[9] The increase in consumption by value occurred primarily from 2003 to 2004, with continued growth from 2004 to 2005.[10] Apparent U.S. consumption by quantity increased after 2002, and increased overall by 156.9 percent from 14.5 million bearings in 2000 to 37.1 million bearings in 2005.[11]

The SPB industry remains highly concentrated with three U.S. producers accounting for about *** of U.S. shipments by value in 2005.[12] The domestic industry became more concentrated during the period of review, as two of the six reporting U.S. producers ceased U.S. production. Emerson Power Transmission discontinued U.S. production of SPBs in March 2001 when it ***.[13] In addition, SKF USA ceased its U.S. production in 2004 ***.[14] SKF USA shipped SPBs in the U.S. market from inventory in 2005.[15] Other restructuring in the domestic industry included two acquisitions: Timken's acquisition of the former Torrington SPB operations in February 2003; and, later that year, RBC's ***.[16] With the consolidation and restructuring, overall domestic capacity to produce SPBs decreased irregularly by 7.8 percent from 2000 to 2005.[17]

The percentage of apparent U.S. consumption supplied by the domestic SPB industry declined during the period of review. The domestic industry's share of apparent U.S. consumption by value was 83.0 percent in 2000, rose as high as 85.9 percent in 2001, and then declined steadily, reaching a period low of 68.7 percent in 2005.[18] Imports from nonsubject sources increased their presence in the U.S. market during the period of review, increasing from 15.7 percent by value in 2000 to a period high of 30.7 percent in 2005.[19] While the market share of imports from subject sources declined by value from

---

[6] CR at SPB-II-8; PR at SPB-II-6.

[7] CR at SPB-II-8; PR at SPB-II-6.

[8] CR at SPB-II-9-10; PR at SPB-II-6-7.

[9] CR/PR at Tables SPB-I-1 and C-3.

[10] CR/PR at Tables SPB-I-1 and C-3. Apparent U.S. consumption of SPBs by value increased by 23.9 percent from 2003 to 2004 and by 9.9 percent from 2004 to 2005. Id.

[11] CR/PR at Tables SPB-I-1 and C-3.

[12] CR/PR at Table SPB-I-6. The three U.S. producers and their share of U.S. shipments by value in 2005 are: ***. The same three U.S. producers accounted for *** of U.S. production by quantity in 2005; their shares of U.S. production are: ***. CR/PR at SPB-III-1 and Table III-1.

[13] CR at SPB-I-15 and Tables SPB-I-6 and SPB-I-7; PR at SPB-I-11 and Tables SPB-I-6 and SPB-I-7.

[14] CR at Table SPB-I-7 and SPB-III-8; PR at Table SPB-I-7 and SPB-III-6.

[15] CR at SPB-III-8; PR at SPB-III-6.

[16] CR at SPB-I-15 and Table SPB-I-7; PR at SPB-I-11 and Table SPB-I-7.

[17] CR/PR at Table C-3.

[18] CR/PR at Table C-3. The domestic industry's share of apparent U.S. consumption by quantity was 50.7 percent in 2000, rose as high as 58.8 percent in 2002, and then declined steadily, reaching a period low of 17.0 percent in 2005. Id.

[19] CR/PR at Table C-3. Nonsubject imports' share of apparent U.S. consumption by quantity increased from 49.0 percent in 2000 to a period high of 82.3 percent in 2005. Id.

1.3 percent in 2000 to 0.6 percent in 2005, subject imports' market share by quantity increased from 0.2 percent in 2000 to a period high of 1.7 percent in 2004 and was 0.8 percent in 2005.[20]

Sales of both domestically produced SPBs and subject imports continued to be concentrated in the OEM/end-user market. In 2005, 77.3 percent of U.S. shipments of domestically produced SPBs by value and 83.2 percent of subject imports were sold in the OEM/end-user market.[21] SPBs generally are specialized products, with the majority of both domestically produced SPBs and subject imports reported in response to Commission questionnaires to be custom bearings rather than standard bearings.[22] In 2005, 93.9 percent of U.S. shipments of domestic SPBs by value and 80.2 percent of subject imports were reported to be custom SPBs.[23] With respect to custom bearings, the *** segment for U.S. shipments of both domestically produced SPBs and subject imports is the OEM aerospace segment. In 2005, *** of U.S.-produced custom bearings and *** of subject imports were shipped to the OEM-aerospace segment.[24]

The majority of U.S. producers, importers and purchasers reported that domestically produced SPBs and subject imports are "always" or "frequently" interchangeable.[25] While quality and price are the most important factors that influence purchasing decisions for SPBs, other factors, such as availability, delivery time, product consistency, and reliability of supply, also were frequently cited as important to purchasing decisions.[26]

B. Likely Volume of Subject Imports

In evaluating the likely volume of imports of subject merchandise if the orders under review are revoked, the Commission is directed to consider whether the likely volume of imports would be significant either in absolute terms or relative to production or consumption in the United States.[27] In doing so, the Commission must consider "all relevant economic factors," including four enumerated factors: (1) any likely increase in production capacity or existing unused production capacity in the exporting country; (2) existing inventories of the subject merchandise, or likely increases in inventories; (3) the existence of barriers to the importation of the subject merchandise into countries other than the United States; and (4) the potential for product shifting if production facilities in the foreign country,

---

[20] CR/PR at Table C-3.

[21] CR/PR at Table SPB-I-5. In the first reviews, 70.9 percent of U.S. shipments of domestically produced SPBs and 68.1 percent of subject imports were sold in the OEM/end-user market. USITC Pub. 3309 at 57 and SPB-I-12.

[22] "Custom bearings" were defined in the Commission questionnaires as those that (1) have a non-catalog number; (2) have a specific drawing number; (3) have a customer-specific part number; or (4) have been otherwise manufactured to a customer's specific order. "Standard bearings" are defined as all other "off the shelf" bearings. CR/PR at Table SPB-I-4, Note.

[23] CR at SPB-I-11; PR at SPB-I-9.

[24] CR at SPB-I-11 and Table SPB-I-4; PR at SPB-I-9 and Table SPB-I-4. According to French producer/exporter ***, the main applications of SPBs are in aircraft, namely flight control, landing gear, engine attachment, and wing. CR at SPB-II-7, n.17; PR at SPB-II-5, n.17. Similarly, the *** U.S. producer, *** of U.S. shipments of SPBs by value in 2005, reported that over *** of its SPBs are used in aerospace applications. CR at SPB-II-7 and Table SPB-I-6; PR at SPB-II-5 and Table SPB-I-6.

[25] CR/PR at Table SPB-II-4. While most reporting purchasers required certification or qualification of their suppliers for the majority of their purchases, the majority of purchasers also reported that no suppliers had failed to receive approval. CR at SPB-II-17; PR at II-11-12.

[26] CR/PR at Tables SPB-II-1 and II-2.

[27] 19 U.S.C. § 1675a(a)(2).

which can be used to produce the subject merchandise, are currently being used to produce other products.[28]

In the first five year reviews, there was limited information in the record regarding the SPB industry in France because only one French SPB producer, SKF Aerospace France, submitted data.[29] Commissioner Koplan found that the limited information in the record indicated "that there is excess available production capacity in France and that subject imports from France would be exported in significant quantities to the U.S. market."[30] He also found that "[w]ith no significant French production affiliated with domestic production, the information in the record reveals that the antidumping duty orders alone have restrained subject imports from France."[31]

In this five year review, similar to the first review, there is limited evidence on the SPB industry in France. Again, only one French producer (SKF Aerospace France) participated and provided the Commission an usable questionnaire response, even though the record evidence demonstrates that there are a number of French producers of SPBs.[32] We find, based on the limited information the Commission was able to obtain, that there is excess available production capacity in France and that the likely volume of subject imports would be significant if the orders were revoked.[33]

In this review, SKF Aerospace France estimated that it accounted for *** of SPB production in France in 2005.[34] While SKF Aerospace France's capacity remained constant, its production fluctuated between years and its capacity utilization was *** in 2005, with a low of *** during the review period.[35] The *** of SKF Aerospace France's shipments of SPBs are to its home market (ranging from *** during this period of review, with *** in 2005), followed by shipments to the European Union, ranging from ***. Its shipments of SBPs to the U.S. market as a share of its total shipments, even with the high duty deposit rates (*e.g.*, 39.0 percent for the all other rate), increased from *** in 2000 to *** in 2005.[36] SKF Aerospace France has excess production capacity and substantial shipments of SPBs to other markets that likely would be shifted to the U.S. market if the orders were revoked.

We recognize that, similar to the first reviews, subject imports held a small share of U.S. apparent consumption during this period of review.[37] We find of particular note that exports of SPBs manufactured

---

[28] 19 U.S.C. § 1675a(a)(2)(A-D).

[29] In the first review, SKF Aerospace France estimated that it accounted for only *** of total French production. USITC Pub. 3309 at 62 and SPB-IV-1.

[30] USITC Pub. 3309 at 62.

[31] USITC Pub. 3309 at 62.

[32] CR at SPB-IV-5-8; PR at SPB-IV-4-5. In fact, one other producer, INA France is incorporated into the Schaeffler Group that appeared as a purchaser at the Commission hearing, but provided a very limited and incomplete response to the SPB foreign producer/exporter questionnaire, even after a number of specific requests.

[33] 19 U.S.C. § 1677e(a) authorizes the Commission to "use the facts otherwise available" in reaching a determination when: (1) necessary information is not available on the record or (2) an interested party or any other person withholds information requested by the agency, fails to provide such information in the time or in the form or manner requested, significantly impedes a proceeding, or provides information that cannot be verified pursuant to 19 U.S.C. § 1677m(i). We have relied on the facts otherwise available in this review, which consist primarily of information from the original investigations and the first five-year reviews, information submitted by the domestic interested parties, one French producer/exporter, importers, purchasers, and official Commerce statistics.

[34] CR at SPB-IV-8; PR at SPB-IV-5.

[35] CR/PR at Table SPB-IV-3.

[36] CR/PR at Table SPB-IV-3.

[37] Subject imports' market share by value fluctuated between years and declined overall from 1.3 percent in 2000 to 0.6 percent in 2005. Subject imports' market share by quantity also fluctuated between years but increased from 0.2 percent in 2000 to 0.8 percent in 2005. CR/PR at Table C-3. During the first review, subject imports' market

(continued...)

by SKF Aerospace France to the United States accounted for only slightly more than *** of the value of U.S. imports of SPBs from France based on official import statistics.[38] Thus, it is apparent that other French producers, which did not respond to Commission questionnaires, are still exporting to the U.S. market in spite of the high duty deposit rates. The excess production capacity and marketing patterns of the other French producers of SPBs, including those already exporting to the U.S. market, are not known because they did not provide the data requested in the Commission questionnaires. *** described competition in France as intense, mainly due to imports, in its questionnaire response.[39] The evidence in the record for global exports of spherical plain bearings (which includes a broader category of SPBs than that included in the scope) indicates that French exports by value have increased by 57 percent from 2000 to 2004.[40] The limited evidence available demonstrates that French SPB producers have become more export-oriented and have product that would likely be shifted to the U.S. market if the antidumping duty orders were revoked.

During this period of review, SKF USA, the U.S. producer of SPBs affiliated with SKF Aerospace France, ceased production in 2004 *** and sold only from inventory in 2005.[41] SKF USA accounted for *** of U.S. SPB production in 2004.[42] With no significant French production affiliated with domestic production, the information in the record reveals that the antidumping duty orders alone have restrained subject imports from France. Based on the available information, we find that absent the discipline of the orders, French producers would export significant quantities to the U.S. market.

The limited information indicates that there are a number of French SPB producers, that the French industry has increased global exports, has the potential to shift to the U.S. market, and has continued, even with high duty deposit rates, to export to the U.S. market. Consequently, based on the record evidence, we conclude that, if the discipline of the orders were removed, French SPB producers would significantly increase exports of SPBs to the U.S. market, and that subject imports likely would rise to a significant level.

C. Likely Price Effects

In evaluating the likely price effects of subject imports if the orders under review are revoked, the Commission is directed to consider whether there is likely to be significant underselling by the subject imports as compared to domestic like product and whether the subject imports are likely to enter the United States at prices that otherwise would have a significant depressing or suppressing effect on the price of domestic like product.[43]

---

[37] (...continued)
share was 0.6 percent in 1997 and 0.8 percent in 1998. CR/PR at Table SPB-I-1. During this period of review, U.S. producers' market share by value remained above 80 percent in 2000-2003 but declined to 75.7 percent in 2004 and 68.7 percent in 2005 as U.S. apparent consumption increased by 36.2 percent from 2003 to 2005. CR/PR at Tables SPB-I-1 and C-3.

[38] CR at SPB-IV-5; PR at SPB-IV-4-5.

[39] CR at SPB-II-5; PR at SPB-II-3.

[40] CR/PR at Table SPB-IV-4.

[41] CR at Table SPB-I-7 and SPB-III-8; PR at Table SPB-I-7 and SPB-III-6.

[42] Calculated from CR/PR at Table SPB-III-1.

[43] 19 U.S.C. § 1675a(a)(3). The SAA states that "[c]onsistent with its practice in investigations, in considering the likely price effects of imports in the event of revocation and termination, the Commission may rely on circumstantial, as well as direct, evidence of the adverse effects of unfairly traded imports on domestic prices." SAA at 886.

The record in the current review, similar to the first reviews, contains no pricing data on subject imports.[44] Moreover, the average unit value data does not permit meaningful price comparisons with the domestic like product.

Domestically produced SPBs and subject imports are considered interchangeable and comparable.[45] Price was an important factor for most purchasers in addition to quality and availability.[46] While SPBs are highly specialized products, the evidence demonstrates that the majority of both domestically produced SPBs (93.9 percent) and subject imports (80.2 percent) are custom bearings.[47] Moreover, *** of U.S. custom bearings and *** of subject imports are shipped to the OEM-aerospace segment of the U.S. market.[48] Thus, the evidence demonstrates that domestically produced SPBs and subject imports overwhelming compete in the same segment of the market.

As discussed above, we find that the volume of subject imports likely would rise to significant levels if the orders were revoked. In order to gain that market share, subject producers from France would again compete on the basis of price. Because the volume of subject imports would likely increase to a significant level, and because the facts available indicate such imports would likely undersell to gain market share, we conclude that the significant likely volume of subject imports would likely have significant price-depressing or price-suppressing effects on the price of the domestic like product.

D. Likely Impact of Subject Imports

In evaluating the likely impact of imports of subject merchandise if the orders under review are revoked, the Commission is directed to consider all relevant economic factors that are likely to have a bearing on the state of the industry in the United States, including but not limited to: (1) likely declines in output, sales, market share, profits, productivity, return on investments, and utilization of capacity; (2) likely negative effects on cash flow, inventories, employment, wages, growth, ability to raise capital, and investment; and (3) likely negative effects on the existing development and production efforts of the industry, including efforts to develop a derivative or more advanced version of the domestic like product.[49] All relevant economic factors are to be considered within the context of the business cycle and the conditions of competition that are distinctive to the industry.[50] As instructed by the statute, we have considered the extent to which any improvement in the state of the domestic industry is related to the orders at issue and whether the industry is vulnerable to material injury if the orders are revoked.[51]

In the original determinations, the Commission found that the dramatic surge in cumulated subject import volume and market share, in combination with the severe decline in the financial condition of the domestic industry, provided sufficient evidence of a causal connection between the subject imports

---

[44] CR at SPB-V-7; PR at SPB-V-5.

[45] CR at SPB-II-18-20 and Table SPB-II-4; PR at SPB-II-12-14 and Table SPB-II-4.

[46] CR at SPB-II-13-18 and Tables SPB-II-1 to SPB-II-3; PR at SPB-II-9-12 and Tables SPB-II-1 to SPB-II-3.

[47] CR at SPB-I-11; PR at SPB-I-9.

[48] CR/PR at Table SPB-I-4.

[49] 19 U.S.C. § 1675a(a)(4).

[50] 19 U.S.C. § 1675a(a)(4).

[51] The SAA states that in assessing whether the domestic industry is vulnerable to injury if the order is revoked, the Commission "considers, in addition to imports, other factors that may be contributing to overall injury. While these factors, in some cases, may account for the injury to the domestic industry, they may also demonstrate that an industry is facing difficulties from a variety of sources and is vulnerable to dumped or subsidized imports." SAA at 885.

and the material injury being experienced by the domestic industry.[52] In the first reviews, Commissioner Koplan found that while the domestic industry was not vulnerable, subject imports would likely cause the domestic industry to lose revenues and/or market share.[53]

The overall condition of the domestic industry in this review is similar to that in the first reviews. The U.S. SPB industry is strong and overall profitable, particularly the *** producers that account for about *** of U.S. shipments by value.[54] The operating income as a share of net sales ranged from a low of 4.5 percent in 2004 to a high of 9.6 percent in 2005.[55]

While such financial indicators support finding that the U.S. SPB industry is not currently vulnerable, other performance indicators demonstrate that the domestic industry has been affected by increases in nonsubject imports and likely would be adversely impacted by the likely increases in subject imports if the order is revoked. First, two U.S. SPB producers ceased production during the current review period: SKF USA closed its U.S. production operations in 2004 and ***;[56] Emerson ceased production and ***. Moreover, the domestic industry has experienced declines in other performance indicators including: declines in U.S. market share, from 83.0 percent by value in 2000 to 68.7 percent in 2005;[57] declines in U.S. shipments by quantity, by 13.9 percent from 2000 to 2005;[58] U.S. shipments by value remained flat from 2004 to 2005 as U.S. apparent consumption increased by about 10 percent;[59] declines in production by 11.6 percent from 2000 to 2005, with the largest decline from 2004 to 2005;[60] and while employment indicators have had modest increases, productivity (bearings per hour) has declined by *** from 2000 to 2005, with most of that decline from 2004 to 2005.[61]

We have concluded that revocation of the antidumping duty orders with respect to SPBs from France likely would lead to significant increases in the volume of subject imports in the reasonably foreseeable future. Such increases in subject import volumes will likely have the effect of exacerbating the declines in production, shipments, market share, and employment that the domestic industry sustained during the current period of review.

Additionally, because of the likely aggressive pricing of the subject imports, the domestic industry either will need to cut prices for the domestic like product or lose sales. Under either scenario, the domestic industry's revenues will likely decline significantly in light of the anticipated volume of subject imports. This, in turn, will likely lead to declines in the industry's operating performance.

We consequently find that revocation of the order under review will likely have a significant adverse impact on the domestic industry. We therefore determine that revocation of the antidumping duty order on SPBs from France will likely lead to continuation or recurrence of material injury to the domestic SPB industry within a reasonably foreseeable time.

---

[52] USITC Pub. 2185 at 71-72.

[53] USITC Pub. 3309 at 63.

[54] CR/PR at Table SPB-III-7.

[55] CR/PR at Table SPB-III-6. In the first reviews, operating income as a share of net sales was 13.5 percent in 1997 and 10.4 percent in 1998. CR/PR at Table SPB-I-1.

[56] Before ceasing production, ***. CR/PR at Table SPB-III-7.

[57] During this period of review, U.S. producers' market share by value remained above 80 percent in 2000-2003 but declined to 75.7 percent in 2004 and 68.7 percent in 2005 as U.S. apparent consumption increased by 36 percent from 2003 to 2005. CR/PR at Tables SPB-I-1 and C-3.

[58] CR/PR at Table C-3. The domestic industry's U.S. shipments by quantity fluctuated from year to year and declined overall from 7.3 million bearings in 2000 to a period low of 6.3 million bearings in 2005. Id.

[59] CR/PR at Table C-3.

[60] CR/PR at Table C-3. The domestic industry's production fluctuated from year to year and declined overall from 7.5 million bearings in 2000 to a period low of 6.6 million bearings in 2005. Id.

[61] CR/PR at Table C-3.

INTRODUCTION AND GENERAL OVERVIEW

BACKGROUND

On June 1, 2005, the United States International Trade Commission ("Commission") gave notice, pursuant to section 751(c) of the Tariff Act of 1930 ("the Act"), that it had instituted reviews to determine whether revocation of the antidumping duty orders on certain bearings and parts thereof[1] from China, France, Germany, Italy, Japan, Singapore, and the United Kingdom would likely lead to the continuation or recurrence of material injury to a domestic industry. Effective September 7, 2005, the Commission determined that it would conduct full reviews pursuant to section 751(c)(5) of the Act. Information relating to the background and schedule of the reviews is presented in overview table 1.

This part of the report presents general background information relating to the reviews, as well as certain information on the product, U.S. market participants, foreign producers, and the U.S. market that pertains to the overall class of certain bearings that are the subject of the reviews. Information specifically relating to TRBs, BBs, and SPBs is presented in chapters one, two, and three, respectively.

Overview table 1
Background and scheduling information related to the reviews

Effective date	Action	*Federal Register* citation[1]
June 15, 1987	Commerce's antidumping duty order on TRBs from China	52 FR 22667
May 15, 1989	Commerce's antidumping duty order on BBs from Germany	54 FR 20900
May 15, 1989	Commerce's antidumping duty order on BBs and SPBs from France	54 FR 20902
May 15, 1989	Commerce's antidumping duty order on BBs from Italy	54 FR 20903
May 15, 1989	Commerce's antidumping duty order on BBs from Japan	54 FR 20904
May 15, 1989	Commerce's antidumping duty order on BBs from Singapore	54 FR 20907
May 15, 1989	Commerce's antidumping duty order on BBs from the United Kingdom	54 FR 20910
February 26, 1990	Commerce's amended antidumping duty order on TRBs from China	55 FR 6669
July 11, 2000	Commerce's continuation of antidumping duty orders after first five-year reviews	65 FR 42665
June 1, 2005	Commission's institution of second five-year reviews	70 FR 31531
Sept. 7, 2005	Commission's decision to conduct full reviews	70 FR 54568
Oct. 12, 2005	Commission's scheduling of full reviews	70 FR 60556
Oct. 5, 2005	Commerce's final results of expedited sunset reviews for France (BBs, SPBs); Germany (BBs); Italy (BBs); and the United Kingdom (BBs)	70 FR 58183

Table continued on next page.

[1] The term "certain bearings" includes tapered roller bearings and parts thereof ("TRBs"), ball bearings and parts thereof ("BBs"), and spherical plain bearings and parts thereof ("SPBs"). *See* the individual chapters of this report for a complete description of the products subject to these review investigations.

Overview table 1–*Continued*
Background and scheduling information related to the reviews

Effective date	Action	*Federal Register* citation[1]
Oct. 6, 2005	Commerce's final results of expedited sunset review on TRBs from China	70 FR 58383
Dec. 9, 2005	Commission's revised scheduling of the subject reviews	70 FR 75482
May 2, 2006	Commission's hearing[2]	Not applicable
May 4, 2006	Commerce's final results of full sunset reviews for Japan (BBs) and Singapore (BBs); amended final results (BBs), May 26, 2006	71 FR 26321 71 FR 30378
May 4, 2006	Commission's second revised scheduling of the subject reviews	71 FR 27513
August 3, 2006	Commission's votes	Not applicable
August 25, 2006	Commission's determinations transmitted to Commerce	Not applicable

[1] The date of the *Federal Register* notice is the same as the effective date unless otherwise noted. The Commission's notice of institution, notice to conduct full reviews, scheduling notice, and statement on adequacy appear in app. A and may also be found at the Commission's web site (internet address www.usitc.gov). Commissioner's votes on whether to conduct expedited or full reviews may also be found at the web site.
[2] A list of hearing witnesses is presented in app. B.

Source: Cited *Federal Register* notices.

The Original Investigations and the First Five-Year Reviews

Tapered Roller Bearings

On August 25, 1986, a petition was filed with the U.S. Department of Commerce ("Commerce") and the Commission on behalf of the Timken Co., alleging that imports of TRBs and parts thereof from China, Hungary, Italy, Japan,[2] Romania, and Yugoslavia were being sold in the United States at less-than-fair-value ("LTFV"). Following affirmative final determinations of dumping by Commerce and injury by the Commission, Commerce published antidumping duty orders with respect to China on June 15, 1987, Hungary and Romania on June 19, 1987, and Japan[3] on October 6, 1987.[4] After the final determinations, the Commission issued a negative remand determination on TRBs from Hungary that was later reversed.[5]

---

[2] The petition, as it related to Japan, was filed to cover those TRBs that were not subject to a 1976 finding by the Treasury Department ("Treasury"). *See* the part of this chapter entitled "Related Investigations" for further discussion of this finding.

[3] The 1987 order on Japan pertained to finished TRBs and components four inches in outside diameter and under from NTN, finished TRBs and components over four inches in outside diameter, and finished and unfinished parts for all sizes of TRBs.

[4] Commerce also issued orders on TRBs from Italy and Yugoslavia, but the orders were ultimately revoked on October 9, 1996 (61 FR 52920) and November 24, 1995 (60 FR 58046), respectively.

[5] On December 21, 1989, the Commission made a unanimous negative remand determination on TRBs from Hungary because in July 1989, the U.S. Court of International Trade ("CIT") reversed the Commission's earlier

(continued...)

The Commission instituted the first five-year review on TRBs from China[6] on April 1, 1999[7] and determined on July 2, 1999 that it would conduct a full review.[8] On March 3, 2000, Commerce determined in its full review that revocation of the antidumping duty order on TRBs from China would be likely to lead to continuation or recurrence of dumping.[9] On June 22, 2000, the Commission found that revocation of the antidumping duty order on TRBs from China would be likely to lead to continuation or recurrence of material injury to an industry in the United States within a reasonably foreseeable time.[10] It also found that revocation of the antidumping duty orders on TRBs from Hungary, Japan, and Romania would not be likely to lead to continuation or recurrence of material injury to an industry in the United States within a reasonably foreseeable time.[11] Commerce published notice of the continuation of the antidumping duty order with respect to TRBs from China on July 11, 2000.[12]

The scope of the order is discussed in Part I of chapter one in the section entitled *The Subject Product*. Also *see* Part I of chapter one of this report for a listing of the original and first and second five-year review margins with respect to TRBs from China.

Ball Bearings and Spherical Plain Bearings

On March 31, 1988, a petition was filed by counsel on behalf of The Torrington Company alleging that imports of BBs and SPBs from Singapore and BBs from Thailand were being subsidized by the Governments of Singapore and Thailand. The petition also alleged that imports of BBs and SPBs from France, Germany, and Japan, and BBs from Italy, Romania, Singapore, Sweden, Thailand, and the United Kingdom were being sold in the United States at LTFV.[13] On May 8, 1989, the Commission determined that a domestic industry producing BBs was materially injured by reason of LTFV imports

---

[5] (...continued)
cumulative injury determination. However, the antidumping duty orders remained in place because the U.S. Court of Appeals for the Federal Circuit reversed the CIT's remand decision on November 20, 1990.

[6] Included in the first five-year reviews were the then-outstanding orders on TRBs from Hungary, Japan, and Romania.

[7] *Institution of Five-Year Reviews Concerning the Antidumping Duty Orders on Certain Bearings from China, France, Germany, Hungary, Italy, Japan, Romania, Singapore, Sweden, and the United Kingdom,* 64 FR 15783, April 1, 1999.

[8] *Notice of Commission Determination to Conduct Full Five-Years Concerning the Antidumping Duty Orders on Certain Bearings from China, France, Germany, Hungary, Italy, Japan, Romania, Singapore, Sweden, and the United Kingdom,* 64 FR 38471, July 16, 1999.

[9] 65 FR 11550, March 3, 2000.

[10] 65 FR 39925, June 28, 2000. *See also Certain Bearings From China, France, Germany, Hungary, Italy, Japan, Romania, Singapore, Sweden, and the United Kingdom, Investigations Nos. AA1921-143, 731-TA-341, 731-TA-343-345, 731-TA-391-397, and 731-TA-399 (Review),* USITC Publication No. 3309, June 2000, p. 3.

[11] Ibid.

[12] *Continuation of the Antidumping Duty Orders: Certain Bearings from France, Germany, Hungary, Italy, Japan, Singapore, the United Kingdom, and the People's Republic of China,* 65 FR 42665, July 11, 2000. Commerce also revoked the orders on TRBs from Hungary, Japan, and Romania. 65 FR 42667, July 11, 2000.

[13] The petition further alleged that the following imports were also being sold in the United States at LTFV: cylindrical roller bearings (" CRBs"), needle roller bearings ("NRBs"), spherical roller bearings ("SRBs"), and slewing rings ("SRs") from Germany; CRBs, SRBs, NRBs, and SRs from France; CRBs, SRBs, NRBs, and SRs from Italy; CRBs, SRBs, NRBs, and SRs from Japan; SRBs and SRs from Romania; SRs from Singapore; CRBs, SRBs, and SRs from Sweden; SRs from Thailand; and SRBs, CRBs, NRBs, and SRs from the United Kingdom.

from France, Germany, Italy, Japan, Romania, Singapore, Sweden, and the United Kingdom[14] and that a domestic industry producing SPBs was materially injured by reason of LTFV imports from France, Germany, and Japan.[15] Commerce published the antidumping duty orders on these bearings on May 15, 1989.

The Commission instituted the first five-year reviews on BBs and SPBs from France and BBs from Germany, Italy, Japan, Singapore, and the United Kingdom[16] on April 1, 1999[17] and determined on July 2, 1999 that it would conduct full reviews.[18] On November 4, 1999, Commerce determined in its expedited reviews that revocation of the antidumping duties on BBs and SPBs from France, and BBs from Germany, Italy, Japan, Singapore, and the United Kingdom would be likely to lead to continuation or recurrence of dumping (64 FR 60266). On June 22, 2000, the Commission found that revocation of the antidumping duty orders on BBs and SPBs from France, and BBs from Germany, Italy, Japan, Singapore, and the United Kingdom would be likely to lead to continuation or recurrence of material injury to an industry in the United States within a reasonably foreseeable time.[19] The Commission also found that revocation of the antidumping duty orders on BBs from Romania and Sweden and on SPBs from Germany and Japan would not be likely to lead to continuation or recurrence of material injury to an industry in the United States within a reasonably foreseeable time.[20] On July 11, 2000, Commerce published notice of the continuation of the antidumping orders for BBs and SPBs from France and BBs from Germany, Italy, Japan, Singapore, and the United Kingdom.[21]

The scope of the orders is discussed in part I of chapters two and three of this report in the section entitled *The Subject Product*. Also *see* chapters two and three for a listing of the original and first five-year review margins and second five-year review margins with respect to BBs and SPBs from France and BBs from Germany, Italy, Japan, Singapore, and the United Kingdom.

---

[14] The Commission also found that a domestic industry was materially injured by reason of subsidized imports of BBs from Thailand. Commerce published the countervailing duty order on Thailand on May 15, 1989, but later revoked the order. 61 FR 31506, June 20, 1996.

[15] In addition, the Commission made affirmative determinations with respect to LTFV imports of CRBs from France, Germany, Italy, Japan, Sweden, and the United Kingdom but made negative determinations with respect to all other products and countries.

[16] Included in the first five-year reviews were the then-outstanding orders on BBs from Romania and Sweden, SPBs from Germany and Japan, and CRBs from France, Germany, Italy, Japan, Sweden, and the United Kingdom.

[17] *Institution of Five-Year Reviews Concerning the Antidumping Duty Orders on Certain Bearings from China, France, Germany, Hungary, Italy, Japan, Romania, Singapore, Sweden, and the United Kingdom,* 64 FR 15783, April 1, 1999.

[18] *Notice of Commission Determination to Conduct Full Five-Years Concerning the Antidumping Duty Orders on Certain Bearings from China, France, Germany, Hungary, Italy, Japan, Romania, Singapore, Sweden, and the United Kingdom,* 64 FR 38471, July 16, 1999.

[19] 65 FR 39925, June 28, 2000. *See also Certain Bearings From China, France, Germany, Hungary, Italy, Japan, Romania, Singapore, Sweden, and the United Kingdom, Investigations Nos. AA1921-143, 731-TA-341, 731-TA-343-345, 731-TA-391-397, and 731-TA-399 (Review),* USITC Publication No. 3309, June 2000, p. 3.

[20] Ibid. The Commission also made negative determinations with respect to the antidumping duty orders on CRBs from France, Germany, Italy, Japan, Sweden, and the United Kingdom. Ibid.

[21] *Continuation of the Antidumping Duty Orders: Certain Bearings from France, Germany, Hungary, Italy, Japan, Singapore, the United Kingdom, and the People's Republic of China,* 65 FR 42665, July 11, 2000. Commerce also revoked the remaining orders on BBs and SPBs and the orders on CRBs. 65 FR 492667, July 11, 2000.

Related Investigations

On October 31, 1973, a complaint was filed at Treasury on behalf of domestic producers alleging that TRBs from Japan were being sold at LTFV. Treasury instituted an antidumping investigation on December 4, 1973, and on October 24, 1974, the then Tariff Commission instituted investigation No. AA 1921-143. On August 18, 1976, Treasury published a finding with respect to TRBs and certain components thereof from Japan.[22]

On February 13, 1991, a petition was filed by counsel for the Torrington Company alleging that imports of BBs, mounted or unmounted, and parts thereof from Turkey were being subsidized by the Government of Turkey, and that imports of BBs from Argentina, Austria, Brazil, Canada, China, Hong Kong, Hungary, Korea, Mexico, Poland, Spain, Taiwan, Turkey, and Yugoslavia were being sold in the United States at LTFV. On April 1, 1991, the Commission made negative preliminary determinations in all of these investigations.

Following receipt on June 9, 1993, of a request from the Office of the United States Trade Representative, the Commission instituted investigation No. 332-344 under section 332(g) of the Act for the purpose of analyzing the economic effects of antidumping and countervailing duty orders and suspension agreements. The Commission conducted eight case studies representing various U.S. industries, including TRBs and BBs.[23]

On February 13, 2002, a petition was filed by the American Bearing Manufacturers Association, Washington, DC, alleging that an industry in the United States was materially injured and threatened with material injury by reason of LTFV imports of certain ball bearings from China.[24] On April 14, 2003, the Commission published notice of its negative final determination in this investigation.[25]

---

[22] Treasury's finding covered “tapered roller bearings, including inner race or cone assemblies and outer races or cups, exported to and sold in the United States, either as a unit or separately, from Japan” (41 FR 34975, August 18, 1976). On August 10, 1981, Commerce published two clarifications to Treasury's finding. The first clarification applied to the size of the TRBs covered by the finding. Commerce found no evidence in the record of the investigation that indicated that Treasury or the Commission investigated any bearings over four inches in diameter. As a result, Commerce included the term "four inches or less in outside diameter" in the definition of TRBs to describe more accurately the scope of the investigation and the administrative determination (46 FR 40550, August 10, 1981). The second clarification applied to the degree of completion of imported TRBs. According to Commerce, neither the petition nor the investigation was directed at transactions involving partially manufactured merchandise. Commerce found that extensive transformation must take place before unfinished TRBs can be sold for use, and that manufacturing rather than assembly or final stage processing is required before the unfinished TRB is considered an essentially finished article. In its clarification, Commerce stated that there are major differences in physical characteristics, manner of sale, and use between finished and unfinished TRBs and, therefore, unfinished TRBs are not the same class of merchandise as finished TRBs. As a result, Commerce excluded the unfinished components of TRBs as described above from the finding of dumping (46 FR 40550, August 10, 1981). On June 15, 1982, Commerce published a revocation of the antidumping finding on TRBs, 4 inches or less in outside diameter when assembled, including inner race or cone assemblies and outer races or cups, exported to and sold in the United States either as a unit or separately, from Japan, produced and sold by NTN (47 FR 25757, June 15, 1982).

[23] The results of the Commission’s study are presented in USITC Pub. 2900, June 1995.

[24] The scope of the investigation included all antifriction bearings, regardless of size, precision grade, or use, that employed balls as the rolling element (whether ground or unground) and parts thereof (inner ring, outer ring, cage, balls, seals, shields, etc.) that were produced in China.

[25] *Ball Bearings From China, Investigation No. 731-TA-989 (Final)*, USITC Publication No. 3593, April 2003, p. 3.

Statutory Criteria and Organization of the Report

Section 751(c) of the Act requires Commerce and the Commission to conduct a review no later than five years after the issuance of an antidumping or countervailing duty order or the suspension of an investigation to determine whether revocation of the order or termination of the suspended investigation "would be likely to lead to continuation or recurrence of dumping or a countervailable subsidy (as the case may be) and of material injury."

Section 752(a) of the Act provides that in making its determination of likelihood of continuation or recurrence of material injury–

> *(1) IN GENERAL.-- . . . the Commission shall determine whether revocation of an order, or termination of a suspended investigation, would be likely to lead to continuation or recurrence of material injury within a reasonably foreseeable time. The Commission shall consider the likely volume, price effect, and impact of imports of the subject merchandise on the industry if the order is revoked or the suspended investigation is terminated. The Commission shall take into account--*
>
> > *(A) its prior injury determinations, including the volume, price effect, and impact of imports of the subject merchandise on the industry before the order was issued or the suspension agreement was accepted,*
> > *(B) whether any improvement in the state of the industry is related to the order or the suspension agreement,*
> > *(C) whether the industry is vulnerable to material injury if the order is revoked or the suspension agreement is terminated, and*
> > *(D) in an antidumping proceeding . . ., (Commerce's findings) regarding duty absorption . . ..*
>
> *(2) VOLUME.--In evaluating the likely volume of imports of the subject merchandise if the order is revoked or the suspended investigation is terminated, the Commission shall consider whether the likely volume of imports of the subject merchandise would be significant if the order is revoked or the suspended investigation is terminated, either in absolute terms or relative to production or consumption in the United States. In so doing, the Commission shall consider all relevant economic factors, including--*
>
> > *(A) any likely increase in production capacity or existing unused production capacity in the exporting country,*
> > *(B) existing inventories of the subject merchandise, or likely increases in inventories,*
> > *(C) the existence of barriers to the importation of such merchandise into countries other than the United States, and*
> > *(D) the potential for product-shifting if production facilities in the foreign country, which can be used to produce the subject merchandise, are currently being used to produce other products.*
>
> *(3) PRICE.--In evaluating the likely price effects of imports of the subject merchandise if the order is revoked or the suspended investigation is terminated, the Commission shall consider whether--*
>
> > *(A) there is likely to be significant price underselling by imports of the subject merchandise as compared to domestic like products, and*

(B) imports of the subject merchandise are likely to enter the United States at prices that otherwise would have a significant depressing or suppressing effect on the price of domestic like products.

(4) IMPACT ON THE INDUSTRY.--In evaluating the likely impact of imports of the subject merchandise on the industry if the order is revoked or the suspended investigation is terminated, the Commission shall consider all relevant economic factors which are likely to have a bearing on the state of the industry in the United States, including, but not limited to--

(A) likely declines in output, sales, market share, profits, productivity, return on investments, and utilization of capacity,

(B) likely negative effects on cash flow, inventories, employment, wages, growth, ability to raise capital, and investment, and

(C) likely negative effects on the existing development and production efforts of the industry, including efforts to develop a derivative or more advanced version of the domestic like product.

The Commission shall evaluate all such relevant economic factors . . . within the context of the business cycle and the conditions of competition that are distinctive to the affected industry.

Section 752(a)(6) of the Act states further that in making its determination, "the Commission may consider the magnitude of the margin of dumping or the magnitude of the net countervailable subsidy. If a countervailable subsidy is involved, the Commission shall consider information regarding the nature of the countervailable subsidy and whether the subsidy is a subsidy described in Article 3 or 6.1 of the Subsidies Agreement."

Information obtained during the course of these reviews that relates to the above factors is presented throughout this report. Summaries of the data collected in the reviews, by type of bearing, are presented in appendix C. Responses by U.S. producers, importers, and purchasers of certain bearings and producers of the product in China, France, Germany, Italy, Japan, Singapore, and the United Kingdom to a series of questions concerning the significance of the existing antidumping duty orders and the likely effects of their revocation are presented in appendix D.

U.S. industry data contained in this report are based on questionnaire responses of producers that are believed to account for the majority of U.S. production of certain bearings in 2005. U.S. import data are based on official Commerce statistics that have been adjusted, at least in part, to exclude non-covered bearings.[26] Value data are emphasized over quantity data throughout this report because of the inherent risks in using quantity data. Literally thousands of types of bearings are subsumed in the three categories of bearings covered by these reviews. Unit values vary from a few cents to thousands of dollars, reflecting differences in size (which can vary from less than one-quarter inch to several feet in diameter),

[26] Certain respondents in the reviews for BBs have noted in submissions to the Commission that U.S. shipment data of domestic production are under-reported whereas data on U.S. imports are over-inclusive. They urge the Commission to consider data compiled from alternate sources (namely, the *Current Industrial Reports of U.S. Bureau of Census MA 332Q*, for which data are available through 2004, and import data calculated from Commission questionnaires). SKF's prehearing brief, exh. 17. By not doing so, respondents argue, "the Commission is arriving at the highest possible measure of import volume and market share." They further argue that official Commerce imports (for consumption) do not account for entries made into foreign trade zone (FTZs). *See*, for example, arguments made in SKF's prehearing brief, pp. 71-74 and exhibit 17.

manufacturing tolerances, and other variables.[27] Further, there is no meaningful way to uniformly quantify the various parts of bearings that are also subject to these reviews.

THE SUBJECT PRODUCTS

Physical Characteristics and Uses

Tapered roller bearings, ball bearings, and spherical plain bearings can be classified under the larger product category of antifriction bearings. Antifriction bearings are machine components that permit free motion between moving and fixed parts by holding, separating, or guiding the moving parts to minimize friction and wear. In an antifriction bearing, a series of rollers or balls are usually mounted in a separator called a cage and enclosed between two rings called races. The rolling elements transmit the physical load or force from the moving parts to the stationary support. Under normal operating conditions, the races and rolling elements carry the load, while the cage spaces and retains the rollers. Bearings may also be fitted with seals or shields, which protect the bearing from contamination and extend bearing life. Bearing sizes vary considerably, from a few millimeters to several meters in outside diameter. Bearings are primarily made from alloy steel; however, some bearing types and certain components may be fabricated from materials such as stainless steel, bronze, copper, ceramic, and certain plastics.

Bearings are designed and sized for specific applications in a variety of products and industries.[28] The choice of which bearing to use for a particular application depends on the load capacity, size, performance, cost, bearing life, and reliability of the bearing types available. Although designed for specific applications, bearings are highly standardized, and in general, bearings of a similar type, size, and configuration, that are manufactured to the same geometries and specific tolerances, are fully interchangeable regardless of the origin of fabrication.

Bearings are largely sold to the original equipment ("OE") market or to the aftermarket. The OE market refers to that segment of the market reserved for assemblies or parts that are used in the manufacture or assembly of new products, such as motor vehicles or construction equipment. For the purposes of these reviews, the term "original equipment manufacturer" ("OEM") describes the producer of the final good, such as an automaker (e.g., Ford). The aftermarket refers to non-OEM parts, in this case bearings, that are used in the replacement, nonwarranty segment of the market largely handled by distributors.[29]

The parties to these reviews generally agree that a large share of OEMs require certification of their bearings and suppliers. Certification may be to a common standard, such as ISO, QS, or equivalent,

---

[27] Parties generally agree. For example, respondent interested party SKF states in its posthearing brief that "AUV data is (sic) not very useful for purposes of analyzing what is going on in the industry (or what is likely to happen), as BBs can range in unit cost from a few cents, for miniature bearings to thousands of dollars, for large and high-precision bearings." SKF's posthearing brief, p. 22.

[28] For example, the U.S. Department of Commerce has identified 114 distinct industries that directly consume bearings and 473 product sectors that consume bearings indirectly. John Tucker, Bureau of Export Administration, U.S. Department of Commerce, *Statistical Handbook of the Ball and Roller Bearing Industry*, part 8, found at *www.doc-bxa.bmpcoe.org/dmrr_bearingshandbook.html*.

[29] Hearing transcript, p. 120 (Swinehart).

which testifies to corporate processes and organizations that meet defined quality standards.[30] The time and cost of the certification process may vary from customer to customer,[31] [32] depending on bearing application, market needs, and existence of established review process, for example.[33] Certification requirements may include specifications such as those for tolerance, surface finish, and service life, as well as ***[34]

A change in suppliers or manufacturing facilities generally requires recertification by the OEM. Caterpillar, for example, "rarely changes suppliers because of the time and resources required to conduct the recertification process,"[35] and John Deere "generally attempts to avoid changing suppliers, given the expense and time involved in switching."[36] Moreover, when discussing the issue of multiple suppliers, NTN claimed that "it's unlikely you're going to go to a second supplier unless there is a very large gap as well as a high confidence level in that second supplier."[37] Delphi reports that the high cost of approving multiple suppliers typically limits its purchases from only one approved bearing supplier and production site for each ball bearing purchase.[38] Caterpillar, however, does maintain long-term relationships with *** that produce the full range of bearings Caterpillar purchases.[39]

Although bearings are often referred to as "standard" and "custom" within the industry, the parties to these reviews have not been able to agree upon commonly accepted industry definitions of these terms. For the purposes of the questionnaires issued in these reviews, the term custom was defined to consist of bearings that have 1) a non-catalog number, 2) a specific drawing number, 3) a customer-specific part number, or 4) been otherwise manufactured to a customer's specific order; bearings not meeting this description were defined as standard (also referred to by industry as off-the-shelf or catalog bearings).

Domestic interested parties claim that within the industry, the definition of "custom or special is going to be a little bit gray."[40] The same parties note that "within one cycle of the application it's {a custom bearing} readily available in the market and that by our definition creates a standard" because bearings are rarely patentable.[41] Delphi noted that "we do not have a definition, as you're asking for,"[42] when requested to define custom vs. standards bearings, whereas Eaton commented that "we don't really distinguish between custom and standard bearings."[43] Furthermore, JBIA distinguishes between less-

---

[30] Domestic interested parties' posthearing brief, exh., Koplan 15.

[31] Domestic interested parties' posthearing brief, exh., Koplan 8.

[32] For example, ***. JBIA's posthearing brief, exh. 10, pp. 4-5. John Deere indicates that bearing approval "requires between one and three years of evaluations," which includes "review of the bearings primary end uses, print reviews, inspections, lab tests, and field tests to determine performance and predict reliability..." JBIA's posthearing brief, exh. 13, p. 3.

[33] Domestic interested parties' posthearing brief, exh. Koplan, p. 9.

[34] JBIA's posthearing brief, exh. 10, p. 2.

[35] JBIA's posthearing brief, exh. 1 p. 26, citing hearing transcript, p. 273.

[36] Hearing transcript, p. 273 (Dedoncker).

[37] Hearing transcript, pp. 372-374 (Horack, Eich, Hooser).

[38] JBIA's posthearing brief, exh. 11, p. 1.

[39] JBIA's posthearing brief, exh. 10, p. 8.

[40] Hearing transcript, pp. 103-104 (Swinehart).

[41] Hearing transcript, p. 108 (Griffith).

[42] Hearing transcript, p. 274 (Holder).

[43] Hearing transcript, p. 275 (Tefft).

technical custom BBs and more-technical custom BBs, and aggregates less-technical custom BBs with standard BBs.[44]

JBIA further asserts that custom ball bearings are unique to specific customer applications and are not interchangeable with other custom ball bearings. Moreover, many never become standardized.[45] SKF also states that ball bearings are not a "commodity," with the market trending away from catalog, off-the-shelf products to more highly engineered, tailor-made products.[46] OEMs, such as Caterpillar, for example, indicate that the bearings they purchase are ***.[47]

Manufacturing Process

The production of antifriction bearings is a relatively mature[48] and capital intensive[49] process that involves four major steps: green machining, heat treatment, finishing, and assembly and inspection. Special bearing-grade alloy steel in the form of seamless tubing is the raw material utilized in the production of most inner and outer rings. Alloy wire, in the form of coils, is the base material for roller manufacture. There is a generally accepted minimum industry standard for steel utilized in bearings production; however, the raw material used by most bearing manufacturers exceeds this standard in quality. The production processes described below generally apply to the manufacture of all types of bearings. However, because of the strict specification requirements applied to precision and superprecision bearings,[50] production of these products often involves greater inspection and the use of clean rooms to control particle and humidity levels during the manufacturing process.

Green machining is the first step in the process of bearings production and refers to the machining operations performed on the raw material prior to heat treatment. For inner and outer rings, the steel tubing is machined on single or multiple screw machines. When the desired contour and shape are achieved, the inner or outer ring is sheared off the end of the tube. Green machining the inner ring involves more steps because of the complexity of the design and function of this component. The machined components are then inspected and gauged to ensure adherence to the prescribed specifications. Alternately, the process may begin with steel bar, which is processed to create rough forgings. These forgings are then green-machined, inspected, and gauged so that they are ready for heat treatment. The green machining of rollers begins with coil wire drawn into a cold header machine where the rollers are sheared in rapid succession and are "headed" or butted in a die to the desired shape.

Following the green machining process, bearing components are heat-treated to ensure durability, hardness, and shock resistence. The first step in this process, carburization, heats the green-machined

---

[44] JBIA's posthearing brief, p. 2.

[45] JBIA's posthearing brief, pp. 1-2.

[46] SKF's posthearing brief, p. 6.

[47] JBIA's posthearing brief, exh. 1, p. 51.

[48] Domestic interested parties' response to the Commission's notice of institution, July 21, 2005, p. 53.

[49] Emerson Power Transmission's response to the Commission's notice of institution, July 20, 2005, p. 3.

[50] Precision and superprecision bearings are manufactured to higher tolerances than non-precision bearings. ABEC ("Annular Bearing Engineering Committee") tolerances pertain to ball bearings, while RBEC ("Roller Bearing Engineering Committee") tolerances pertain to roller bearings. Tolerance classes are 1, 3, 5, 7, and 9 (higher numbered classes correspond to higher tolerances); these classes define the minimum and maximum manufacturing ranges for bearings (for example, such tolerances govern the allowable variation limits on bore size, diameter, width, and thickness as well as other error limitations). Bearings that are manufactured to higher tolerances provide greater running accuracy and have a higher speed capability. A common use for such bearings is in machine tool spindle units.

components in a carbon-rich atmosphere to impregnate carbon into the surface of the product.[51] The components are then "quenched" or immersed in an oil bath. After quenching, the carburized outside case becomes very hard, whereas the lower carbon core remains comparatively soft. The highly carburized outer layer ensures that the roller contact surfaces will be hard and wear-resistant, while the softer core enables the bearing to absorb shocks more easily.

The next stage of heat treatment is applicable in the manufacture of all steel bearing parts, with the exception of cages.[52] The components are placed in a tempering furnace and heated to very high temperatures for an extended period of time. This process improves the toughness and durability of the bearing component. The components are then placed in a stamping die for reshaping, as the heating process distorts their size, and are quenched once more in an oil bath.

The third phase of production is finishing. This process consists mainly of a series of grinding and honing operations to ensure that the components are sized to the required precise tolerances and polished to ensure the smoothest possible rolling surface. Grinding is performed in a series of steps wherein the width, outside diameter, and bore of the inner and outer rings are shaped. Honing involves the polishing of the inside diameter of the outer ring and the outside diameter of the inner ring.

Rollers are finished somewhat differently than are the inner and outer rings. The basic steps involve rough-grinding the roller body, grinding the roller end, finish-grinding the roller body, and roller-honing. Rollers initially pass through a number of grinding machines that remove steel from the outside diameter in order to obtain a specified size. During end-grinding, steel is removed from the large end of the roller, leaving a slightly convex shape. After final grinding and honing, the rollers are inspected, gauged, and packaged in their sequential order of production to minimize the variance of a complement of rollers in an inner ring assembly.

After the finishing process, the bearings are assembled. Cages are mounted on an assembly nest and the balls or rollers are placed in the openings or pockets of the cage. The inner ring is then inserted into the middle of the cage. The inner and outer ring assemblies are then demagnetized, inspected, slushed with a protective anti-rust solution, and packaged for shipment.

One party in support of the orders' revocation states that, since the first reviews, production equipment has become faster and more efficient and includes more advanced machine tools (such as computer numerical controlled or CNC), resulting in less downtime and faster production rates. In addition, the party asserts that the integration of real-time information systems into company activities has reduced operating costs.[53]

---

[51] This process of adding carbon to the surface layer of steel is known as "case hardening." The vast majority of bearings are heat treated in this manner. Alternatively, however, bearings may be "through hardened," a process wherein bearing components made from steel with a high carbon content are simply heat treated but not carburized.

[52] Cages are manufactured from cold-rolled strip steel. The steel is fed into a press, which blanks and pierces the material to form a finished cage. The cages are then surface-treated and cleaned before incorporation into the assembly process.

[53] INA's response to Commission's notice of institution, July 21, 2005, p. 16.

U.S. MARKET PARTICIPANTS

U.S. Producers

According to public sources, there are 81 separately identified producers of the subject bearings in the United States. Producer questionnaires were sent to all 81 companies.[54] Twenty-three firms provided data in response to the questionnaire that have been incorporated into this staff report (overview table 2),[55] 19 firms indicated that they did not produce the subject bearings,[56] and the remaining 33 firms failed to respond.[57] [58] The largest U.S. producers of certain bearings include Delphi, Koyo, New Hampshire, NSK, NTN, SKF, Schaeffler, and Timken.

---

[54] This figure includes, in a number of instances, the individual subsidiaries of U.S. manufacturers. References to "numbers" of firms made throughout this report will not always be directly comparable to public sources or to "numbers" presented in previous Commission reports. This is, in part, due to the elimination of firms that produced types of bearings no longer subject to the reviews of outstanding antidumping duty orders. Further, as discussed by the parties in their responses to the Commission's notice of institution and in their questionnaire responses, the bearings industry has continued throughout the period since the first reviews to rationalize its production operations. A number of firms that previously provided separate responses to Commission questionnaires have, due to firm consolidations in the intervening years, now presented combined responses. Recipients were requested in the instructions to Commission questionnaires to combine the data for all their establishments (including their U.S. subsidiaries) into a single questionnaire response. (Firms, in some cases, have provided separate data for their operating subsidiaries albeit under the cover or "name" of their reporting parent. Accordingly, data in some tables may be presented separately for these individual reporting subsidiaries.)

[55] An additional firm, ***, provided data on unground ball bearings that were determined to not fall within the definition of the subject bearings.

[56] These firms consist of: Accurate Bushing; American Roller Bearing Co.; Bearing Inspection; Bearing Service Co. of PA; Berliss Bearing Co.; Carolina Forge Co. LLC ("Carolina Forge"); Eastern Sintered Alloys Inc.; GGB Bearing Technology; General Bearing Corp.; IKO International, Inc.; Kingsburg, Inc. (specialty custom bearings only); Orion Corp.; Pacific Bearing, Inc; Parker Hannifin Corp. (Daedal Division); Precision Industrial Components (d/b/a PIC Design); QA1 Precision Products; Rotek, Inc.; Silverthin Bearing Group; and Universal Bearings, Inc. Carolina Forge, however, purchased Nucor Bearing Products, Inc. ("Nucor") in 2001 at which time it shutdown Nucor's BB production. According to the firm, "***." Staff telephone interview with ***, Carolina Forge Co. LLC, February 28, 2006.

[57] Included among the non-respondents were the following firms: (1) Ajax Rolled Ring & Machine (which indicated, in an e-mail dated January 27, 2006, that ***; (2) Gear Products (which indicated, in a letter dated February 27, 2006, that ***; (3) Hartford Technologies (which indicated, in a letter dated February 22, 2006, that ***; (4) National Bearings Co. (which indicated, in a letter dated January 26, 2006, that ***; and (5) Sudo Corp. (which indicated, in a letter dated January 17, 2006, that ***). Another firm, RBC Bearings, Inc., provided data on its SPB operations but not on its TRB or BB operations.

[58] Figures as presented do not total to the 81 questionnaires mailed since, as indicated above, a number of firms provided combined responses that included their subsidiaries and predecessor firms that were each mailed a separate questionnaire.

Overview table 2
Certain bearings: Responding U.S. producers, their foreign ownership (if any), and types of certain bearings produced

U.S. producer	Foreign ownership	TRBs	BBs	SPBs
Alinabal, Inc.	--			✔
Atlantic Bearing Co., Inc.	--		✔	
Delphi Automotive Systems LLC	--		✔	
Emerson Power Transmission Corp. and subsidiaries[1]	--		✔	✔
Hoover Precision Products, Inc.	Tsubaki Nakashima Co., Ltd (Japan)		✔	
Koyo Corp. of USA	JTEKT Corp. (Japan)	✔	✔	✔
Nachi Technology, Inc.	Nachi Fujikoshi Corp. (Japan)		✔	
Nakanishi Manufacturing Corp.	Nakanishi Metal Works (Japan)	✔	✔	
New Hampshire Ball Bearings, Inc.	Minebea Co. Ltd. (Japan)		✔	✔
NN, Inc.	--	✔	✔	
NSK Corp.	NSK Ltd. (Japan)	✔	✔	
NSK-AKS Precision Ball Co.	Amatsuji Steel Ball Co. (Japan) and NSK Ltd. (Japan)		✔	
NTN-USA Corp. and wholly-owned U.S. subsidiaries[2]	NTN (Japan)	✔	✔	
Pacamor/Kubar Bearings	--		✔	
RBC Bearings, Inc.	--	✔	✔	✔
Rexnord Bearing Group (Link-Belt Bearing)	--		✔	
Rockwell Automation Power Systems (Dodge)	--		✔	
Saint-Gobain Ceramics & Plastics, Inc.	Saint-Gobain Corp. (France)		✔	
Schaeffler Group USA Corp. and predecessors[3]	Schaeffler KG (Germany)		✔	
SKF USA, Inc.	AB SKF (Sweden)	✔	✔	✔
The Timken Co.[4]	--	✔	✔	✔
Triangle Manufacturing Co.	--		✔	
Trostel Ltd.	--		✔	

[1] Subsidiaries consist of McGill Manufacturing Co.; Rollway Bearing International LTD.; Emerson Chain, Inc.; and Emerson Power Transmission Drives & Components, Inc.
[2] ***. E-mail from counsel for NTN, May 9, 2006.
[3] Predecessors consist of Barden, FAG Automotive, FAG Industrial, INA, and Winsted Precision Ball.
[4] Includes a portion of the former Torrington Co. assets and MPB Corp.

Source: Compiled from data submitted in response to Commission questionnaires, except as noted.

A description of significant changes that have occurred in the domestic bearings industry since 1970, by firm, is presented in overview table 3. This information was compiled from questionnaire responses, party submissions, and prior Commission reports. The most significant structural change in the U.S. bearings industry during the past five years was the February 2003 acquisition of The Torrington Company ("Torrington Co." or "Torrington") by The Timken Company ("Timken Co." or "Timken"), creating the world's third largest bearing company. The product scope of Torrington (principally needle roller bearings, as well as ball, spherical, and cylindrical bearings) complemented Timken's emphasis on tapered roller bearings and alloy steel products, and nearly doubled the size of Timken.[59]

As shown in overview table 2, a number of U.S. producers reported foreign ownership. Responses to Commission questionnaires have included discussions of the increasing globalization of bearing production and the impact of that globalization on operations within the United States. For example, ***, a large U.S. producer of BBs that opposes the continuation of the antidumping duty orders for BBs from France, Germany, Italy, Japan, Singapore, and the United Kingdom, stated that "{s}ince 2000, there has been a major structural change in the global production, marketing and sales of BBs. ... As a result of these phenomena, BB manufacturers located in the subject countries and the United States have had to reduce and rationalize their worldwide production capabilities in order to remain competitive."[60] Respondent interested party JBIA asserts in its prehearing brief that the "trend toward consolidation {in the BB industry} is expected to continue in the near term."[61] Moreover, JBIA maintains that considerable growth in the production capacity of standard BBs in nonsubject countries, as a result of lower relative production costs, has induced multinational BB producers to shift a significant portion of their production capacity to non-subject countries in order to remain competitive in the sale of standard BBs in U.S. markets, subject countries, and non-subject countries. Thus, JBIA argues that BB producers "have generally worked since 2000 to retool their subject-country manufacturing facilities to produce high-value, custom BBs for sale to OEMs located in their home markets" while "less-technical custom and standard BBs are built in cost-optimum locations."[62] With respect to TRBs, the China Chamber of Commerce for Import and Export of Machinery and Electronic Products ("CCCME") stated that "{t}he entire bearings industry, including TRBs, is increasingly global and dominated by large, multinational companies with operations through out the world."[63] Additionally, CCCME asserts that Timken and all major TRB producers "allocate production among their plants to maximize production and marketing efficiencies."[64] Further, Timken, which manufactures each of the types of bearings subject to these reviews, was reported in the industry press as initiating a new manufacturing strategy in 2001 that refocused its global manufacturing operations to reduce costs and assets in an effort to improve productivity.[65]

---

[59] SKF argues that since U.S. facilities "generally do not produce more than a single product category," specialty plants and product lines have either been spun off, transferred or sold. SKF's prehearing brief, p. 29.

[60] ***'s producer questionnaire response, question I-3.

[61] JBIA's prehearing brief, p. 1.

[62] JBIA's posthearing brief, pp. 2-3.

[63] CCCME's supplemental response to the notice of institution, p. 6.

[64] CCCME's prehearing brief, p. 13.

[65] Bruce A. Carr, "Timken Unveils Second Consecutive Global Restructuring Program," *The eBearing News*, Apr. 24, 2001, found at http://www.ebearing.com, retrieved July 28, 2005.

Overview table 3
Certain bearings: Changes in the U.S. industry since 1970

U.S. producer	Event
Accuride International Inc.	Closed its Charlotte, NC facility (2001) and its South Bend, IN factory (2002)
Ajax Rolled Ring & Machine	Firm divested from SKF (the former Ovako-Ajax) (since 2000)
Barden	Acquired by INA in 2002 and now (effective January 1, 2005) consolidated into the Schaeffler Group
Delphi	General Motors closed its bearing facility in Connecticut (1992)
Delphi	Filed for Chapter 11 bankruptcy proceedings on October 8, 2005. As a result, payments to Delphi's top creditors (Timken, Torrington, INA and Koyo) were put on hold
Delphi	Unveiled a massive restructuring plan to cut costs by a number of measures that include the elimination of several non-core product lines, including wheel bearings (2006)
Emerson	***
FAG	Acquired The Barden Corp. (1990)
FAG	Acquired by INA in 2002 and now (effective January 1, 2005) consolidated into the Schaeffler Group
Federal Mogul	Acquired by NTN (pre-2000)
General Bearing	***
Hoover Precision Products	Tsubakimoto purchased the ball and roller division of the Hoover Group (pre-2000)
Koyo	Koyo USA established manufacturing division in United States (1973)
Koyo	***
Link-Belt Bearing	***
MPB	Acquired Aerospace Bearing Unit of Torrington, relocated to New Hampshire (1993)
Nachi	Established Nachi Bearing and began assembly in Maine (1974)
Nachi	Established Nachi Technology in Indiana to specialize in automotive bearings (1988)
Nachi	***
Nakanishi	Established to produce steel cages for TRBs and BBs (pre-2000)
Nakanishi	***
Nakanishi	***
Nakanishi	***
New Hampshire	Completed a new plant in Chatsworth, CA to produce TRBs (2000)
New Hampshire	***

Table continued on next page.

Overview table 3--*Continued*
Changes in the U.S. industry since 1970

U.S. producer	Event
Nucor	Purchased by Meadville Forging Co. in February 2001 (now known as Carolina Forge Co.); stopped producing BBs (2001)
NN	Acquired Delta Rubber Co. plant that produces BB and TRB seals (2001)
NN	Closed plant in Walterboro, SC that produced BB balls (2001)
NSK	Formed joint venture with Amatsuji (NSK-ASK) to produce balls in new Iowa plant (pre-2000)
NSK	Integrated RHP Bearings of Ohio into NSK's organization (1994)
NSK	Began production of ball screw and automotive hub bearings in Indiana (1993)
NSK	Began component manufacturing in Indiana (1996)
NSK	***
NSK	Began "***" production of TRBs (2001)
NSK	***
NSK	***
NTN	Transferred 3 TRB production lines from Japan to the United States (1988)
NTN	Acquired Federal Mogul Corp.'s BB operations (1996)
NTN	Announced a cut of 1,000 jobs and 12 percent of its payroll by the end of March 2003 (2002)
NTN	NTN-Bower revealed a massive physical and product-line expansion for its Macomb, IN plant (2004)
NTN	Closed Greensburg, IN plant that produced BBs for agricultural equipment (2004)
NTN	NTN-BCA Corp. closed its bearing manufacturing plant in Greensburg, IN. 280 jobs were cut and production was moved to its facility in Lilitz, PA (2004)
NTN	NTN Bower Corp. expanded the manufacturing space of its Macomb, IL plant by 290,000 square feet at a cost of $55 million (2005)
QA1 Precision	Commenced production of SPBs (1994)
QA1 Precision	***
RBC	Acquired Transport Dynamics (1992) and Heim Bearings (1993); both produce aerospace bearings and SPBs
RBC	Acquired Nice Bearings (1997) (BB production) and Tyson Bearings (1999) (TRB production) from SKF
RBC	Acquired Timken's Airframe Product Business (2004)
RBC	***
Schaeffler	INA purchased FAG and Barden and is now consolidated under one company as Schaeffler KG (FAG Bearings Corp. and INA-USA Corp. were merged into Schaeffler Group USA, Inc. as of January 1, 2005)

Table continued on next page.

Overview table 3--*Continued*
Changes in the U.S. industry since 1970

U.S. producer	Event
SKF	Purchased Ajax Forge and formed Ovako-Ajax, a ring forger (1988)
SKF	Opened BB plants in South Carolina and Kentucky and SPB plant in Connecticut (pre-2000)
SKF	***
SKF	Closed plants in Pennsylvania and Connecticut (pre-2000)
SKF	Sold BB plant in Pennsylvania and TRB plant in Kentucky (pre-2000)
SFK	Closed Altoona, PA plant that produced BBs and SPBs (2004)
SKF	Announced the closing of its CR Seal plant in Springfield, SD (2005)
SKF	***
Timken	Opened Tata Timken bearing plant (1986)
Timken	Closed Columbus bearing plant (1988)
Timken	Acquired MPB Corp. (1990)
Timken	Opened Altavista bearing plant (pre-2000)
Timken	Opened Asheboro bearing plant (pre-2000)
Timken	Acquired Rail Bearing Service, Inc. (1995)
Timken	Acquired Bearing Repair Specialists (1998)
Timken	Exited MPB Corp.'s disk drive bearing cartridge business (2000)
Timken	Closed Columbus, OH plant that produced TRBs (2001)
Timken	Acquired Glunt Industries, Inc., an industrial equipment repair facility in the TRB industry (2002)
Timken	Entered into a joint venture for forged & machined rings and sold the assets of the Winchester, KY plant producing TRBs (2002)
Timken	Sold the Ashland, OH plant that tooled TRBs (2002)
Timken	Sold MPB Corp.'s Handpiece Headquarters and Score International; exited the dental handpiece repair business for BBs (2003)
Timken	Sold the Torrington, CT aircraft control BB business to RBC Bearings (2003)
Timken	Acquired The Torrington Co. (February 2003)[1]
Timken	Closed 3 regional service centers for TRBs (2003)
Timken	Closed Rockford, IL plant that produced high-volume radial BBs (2004)
Timken	***
Timken	Timken acquired Bearing Inspection, Inc., a services company specializing in bearing inspection, reconditioning and engineering services (2005)

Table continued on next page.

Overview table 3--*Continued*
Changes in the U.S. industry since 1970

U.S. producer	Event
Timken	***
Timken	***
Torrington	Acquired Fafnir Bearing Division of Textron, Inc. (1985)
Torrington	Sold Newington plant (aerospace bearings) to MPB (1993)
Torrington	Closed Calhoun plant, closing was done in context of restructuring BB operations (1998)
Torrington	Invested in a joint venture with GMN producing BBs in Illinois (1989)
Torrington	Purchased the GMN share of the venture
Torrington	Opened new green ring facility in Canton (1997)
Torrington	Acquired by The Timken Co. (February 2003)[1]

[1] As noted earlier, Timken was the petitioner in the original investigations concerning TRBs while Torrington was the petitioner in the original investigations concerning the orders on BBs and SPBs. At that time, Torrington was a wholly owned subsidiary of Ingersoll Rand. However, on February 18, 2003, Torrington was acquired by Timken. Timken is also a successor to MPB Corp., which produces BBs and supported the original petition in 1988. In 1990, MPB Corp. was acquired by Timken. The BB operations that were a part of the former MPB Corp. continued as MPB Corp. d/b/a Timken Aerospace & Super Precision. Both Timken US Corp. and MPB Corp. continue to operate as legal entitles producing BBs as wholly-owned subsidiaries of Timken. Domestic interested parties' response to the Commission's notice of institution, p. 3, n. 2.

Note.–The periods in which the changes occurred (or are scheduled to occur) are shown in parentheses, to the extent known.

Source: Compiled from data submitted in response to Commission questionnaires, party submissions, and prior Commission reports.

U.S. Importers

Importer questionnaires were sent to 226 importers of products that fall within the scope of these reviews;[66] approximately 90 questionnaire responses (not including certifications that firm does not

[66] Importer questionnaires were sent to firms identified in documents provided by U.S. Customs and Border Protection ("Customs") as having imported, by value, 91 percent of U.S. imports of TRBs from China (under the "primary" HTS statistical reporting numbers or those numbers where most subject product is believed to be entered and that do not include substantial volumes of non-covered product) during the period January 2000 to August 2005. With respect to BBs, importers accounted for the following shares of the value of U.S. imports: 86 percent for France, 79 percent for Germany, 89 percent for Italy, 81 percent for Japan, 99 percent for Singapore, and 80 percent for the United Kingdom. Finally, importers accounting for 83 percent of the value of SPBs imported from France received questionnaires.

import) have been received.[67] The majority of the importers that were identified as substantial importers for each subject product and country responded to the questionnaire[68] (*see* Part I of chapters one to three of the report for lists of the responding U.S. importers). Importers of certain bearings are located throughout the United States and, in many instances, are related to or are the importing arm of foreign-owned manufacturers of certain bearings. Several U.S. producers or their related firms also reported imports of subject and/or nonsubject bearings. Data on U.S. producers' imports of certain bearings are presented in Part III of chapters one to three.

U.S. Purchasers

The Commission mailed questionnaires to 119 purchasers of certain bearings, of which 56 responded (plus two that responded that they did not purchase certain bearings). Of the responding firms, 32 purchase TRBs, 51 purchase BBs, and 25 purchase SPBs. Further information on purchasers is contained in each Part II.

FOREIGN PRODUCERS

Foreign producer/exporter questionnaires were sent (1) to subject bearing producers identified by parties in their responses to the Commission's notice of institution and (2) to firms identified in Customs documents as exporting certain bearings from the subject countries.[69] Questionnaires were also distributed to all parties to these reviews for transmission to their clients. Parties were instructed that all foreign manufacturers, whether or not they are currently exporting to the United States or whether or not they have ever exported to the United States, should respond to the foreign producer/exporter questionnaire.[70] It is estimated that the following numbers of firms were covered by the questionnaire distribution: 41 producer/exporters of TRBs (China),[71] 96 producer/exporters of BBs (in the subject countries),[72] and 13 producer/exporters of SPBs (France).[73] A list of the foreign producers that have submitted data in response to the Commission's questionnaires and which are incorporated into this staff report is presented in overview table 4.

---

[67] As was the case for domestic producers, a number of firms submitted a single importer questionnaire response that combined the operations of subsidiaries or affiliates receiving individual questionnaires.

[68] Exceptions include TRBs (with the major non-respondents consisting of ***); BBs from Germany (with major non-respondents consisting of ***); and BBs from Italy (***). A second large U.S. importer of TRBs from China also did not respond (***); that firm is, however, believed to be ***.

[69] In many but not all instances these firms are the manufacturer of the subject product.

[70] E-mail from Commission staff to counsel for interested parties, January 6, 2006.

[71] Figure includes questionnaires distributed by the CCCME and by counsel for SKF and Timken to their related manufacturers of TRBs in China.

[72] The figure does <u>not</u> include questionnaires transmitted by counsel to their clients and to their clients' subsidiaries. Approximately 43 firms related to the parties were identified in Customs documents as having exported BBs to the United States since January 1, 2000. (A number of these entities have either been acquired or were not functioning as independent firms and, in most instances, parties have, as instructed, submitted foreign producer/exporter responses that combined their firm's operations for each of the subject countries.)

[73] Figure includes questionnaires transmitted directly by counsel for Schaeffler and SKF.

Overview table 4
Certain bearings: Responding foreign producers, by country and types of certain bearings produced

Foreign producer	TRBs	BBs	SPBs
China:[1]			
China National Machinery Import & Export Corp./Yantai CMC	✔		
Hangzhou Jingzhou Bearing Co., Ltd./HJH	✔		
Harbin Bearing Group Corp./HRB	✔		
Louyang Bearing Corp. (Group)/LYC	✔		
Schaeffler Group	✔		
Shanghai SKF Automobile Bearing/Beijing Nankou SKF	✔		
Shanghai United Bearing Co., Ltd./SUBC	✔		
Timken-NSK Bearings (Suzhou) Co., Ltd.	✔		
Wanxiang Group	✔		
Xiangyang Automobile Bearing Co., Ltd./ZXY	✔		
Xibiei Bearing Group Import & Export Co., Ltd/NXZ	✔		
Yantai Timken Co., Ltd.	✔		
Zhejiang Changshan Changhe Bearing Co., Ltd./ZCCBC	✔		
France:[2]			
SKF Aerospace France		✔	✔
SKF France S.A.		✔	
SNR Roulements		✔	
Timken France SAS		✔	
Germany:[3]			
NSK Europe Ltd. (Neuwig Fertigung GmbH)		✔	
NTN Kugellagerfabrik (Deutscheland) GmbH		✔	
Schaeffler KG (INA Schaeffler KG, FAG Kugelfischer AG & Co.)		✔	
SKF Germany GmbH		✔	
Timken GmbH		✔	
Italy:[4]			
SKF (SKF Industrie S.p.A., OMVP S.p.A., and RFT S.p.A.)		✔	
Japan:[5]			
Asahi Seiko Co., Ltd.		✔	

Table continued on next page.

Overview table 4--*Continued*
Certain bearings: Responding foreign producers, by country and types of certain bearings produced

Foreign producer	TRBs	BBs	SPBs
Japan (cont.):			
JTEKT (Koyo Seiko)		✔	
Minebea Co., Ltd.		✔	
Nachi-Fujikoshi Corp.		✔	
Nippon Pillow Block Co., Ltd.		✔	
NSK Ltd.		✔	
NTN Corp.		✔	
Takeshita Seiko Co., Ltd.		✔	
THK Co., Ltd.		✔	
Singapore:[6]			
NMB Singapore Ltd./Pelmec Industries (Pte.) Ltd.		✔	
United Kingdom:			
The Barden Corp. (UK) Ltd.		✔	
Koyo Bearings (Europe) Ltd.		✔	
NMB-Minebea UK, Ltd.		✔	
NSK Europe Ltd. (including NSK Bearings Europe Ltd.)		✔	
SKF (U.K.) Ltd./SKF Aeroengine UK		✔	
Timken UK Ltd. (including Timken Aerospace UK)		✔	

[1] Responses to the foreign producer questionnaire were also received from the following firms for which the order on TRBs from China has been revoked: Tianshui Hailin Import and Export Corp. and Wafangdian Bearing Co., Ltd. In addition, the following exporter of TRBs from China provided a response: ***.
[2] In addition, the following exporters of BBs from France provided responses: ***; and the following exporters of SPBs from France provided responses: ***.
[3] In addition, the following exporters of BBs from Germany provided responses: ***.
[4] In addition, the following exporter of BBs from Italy provided a response: ***.
[5] In addition, the following exporter of BBs from Japan provided a response: ***.
[6] In addition, Timken Super Precision Singapore Pte. Ltd. provided data for BBs that ***.

Note 1.–***.

Note 2.–The names of possible additional manufacturers of certain bearings related to interested parties were provided in questionnaire responses and other record material. These firms include the following, for BBs: ***; and for TRBs: ***.

Source: Compiled from data submitted in response to Commission questionnaires.

Overview table 5 lists the world's top 10 bearing companies (based on 1999 sales).

Overview table 5
The world's top ten bearings companies based on 1999 sales

Company	**World bearing sales** (*$ million*)	**Share of world sales**[1] (*percent*)
AB SKF (Sweden)	4,124	17.3
NSK (Japan)	2,601	11.5
(e) INA (Germany)	1,941	8.2
FAG (Germany)	1,862	8.1
Koyo Seiko (Japan)	1,852	8.1
NTN (Japan)	1,838	7.6
Timken (USA)	1,760	7.2
(e) Torrington (USA)	1,425	6.6
Minebea (Japan)	796	3.5
(e) SNR (France)	498	2.0
Subtotal (top 10)	18,697	80.0
Total (world)	23,371	100.0

[1] Calculated from unrounded figures.
(e) - estimate.

Source: *Statistical Handbook of the Ball and Roller Bearing Industry*, John Tucker, Bureau of Export Administration, U.S. Department of Commerce, June 2001.

CHAPTER ONE: TAPERED ROLLER BEARINGS

PART I: OVERVIEW

This chapter presents information pertaining to the Commission's review involving the antidumping duty order on TRBs from China. A summary of the data collected in this review is presented in appendix table C-1. U.S. industry data are based on questionnaire responses of seven firms that are believed to account for the great majority of U.S. production of TRBs in 2005.[1] U.S. import data are based on official Commerce statistics adjusted to exclude producers/exporters for which the order has been revoked.[2] Available comparative data from the original investigations, the first five-year reviews, and the current five-year review are presented in table TRB I-1. Figure TRB I-1 presents the trends of TRB imports from China and all other sources for the period 1983 to 2005 based on official Commerce statistics.

The value of subject TRB imports from China increased significantly following the imposition of the order, from $830,000 in 1986 to $23.8 million in 1998.[3] The value of subject imports declined to $*** in 2000 and then rose irregularly to $*** in 2005.

---

[1] Firms that provided data during the first reviews that did not respond during the current reviews consist of: Kaydon Corp. (firm sales accounted for *** percent of the value of total U.S. shipments in 1998) and Ovako Ajax, Inc. (accounted for *** percent). (Ovako Ajax, however, provided information *** and explaining that ***; e-mail from *** for Ovako Ajax, January 27, 2006). In addition, the following firms indicated that they are no longer manufacturing TRBs in the United States: American Roller Bearing Industries (firm sales accounted for *** percent of the value of total U.S. shipments in 1998), General Bearing (accounted for *** percent), and Nucor Bearing (accounted for *** percent). ***. General Bearing was also reported in the industry press as having, in April 2001, increased its ownership of Ningbo General to 50 percent and taken full control of the operation. Bruce A. Carr, "General Bearing Boosts China Ningbo Ownership Stake to 50%," *The eBearing News*, April 19, 2001, found at *http://www.ebearing.com*, retrieved June 16, 2005. Finally, the operations of the former Torrington Co. are now incorporated into those of Timken. Shares of U.S. producers' shipments for 1998 were obtained from the confidential staff report INV-X-101 (May 8, 2000).

[2] These producers/exporters consist of: Shanghai General Bearing Co. ("Shanghai General"), Tianshui Hailin Import & Export Corp. and Hailin Bearing Factory ("Tianshui Hailin"), and Wafangdian Bearing Co. ("Wafangdian").

[3] In February 1997, the order was revoked with respect to Shanghai General, whose imports accounted for approximately *** percent, by value, of total imports from China in 1998.

Table TRB I-1
Tapered roller bearings and parts thereof: Comparative data on the U.S. market and industry from the original investigations, first five-year reviews, and the current five-year review, 1983-86, 1997-98, and 2000-05

Item	1983	1984	1985	1986	1997	1998	2000	2001	2002	2003	2004	2005
(Value = *1,000 dollars*; quantity = *1,000 units*; unit values, unit labor costs, and unit financial data are *per unit*; hours worked=*1,000*; and productivity = *units per hour*)												
U.S. consumption:												
Value	***	***	***	***	1,322,281	1,418,791	***	***	***	***	***	***
Producers' share[1]	***	***	***	***	82.3	80.2	***	***	***	***	***	***
Importers' share:												
China[1 2]	***	***	***	***	2.1	1.7	***	***	***	***	***	***
All others[1 3]	***	***	***	***	15.7	18.1	***	***	***	***	***	***
Total imports[1]	***	***	***	***	17.7	19.8	***	***	***	***	***	***
Value of U.S. imports from:												
China[2]	989	1,751	955	830	27,242	23,837	***	***	***	***	***	***
All others[3]	91,574	157,830	148,081	141,711	206,617	257,060	***	***	***	***	***	***
Total imports	92,563	159,581	149,036	142,541	233,859	280,896	266,065	219,703	262,777	341,748	439,414	583,024
U.S. producers':												
Capacity quantity[4 5]	182,831	178,753	182,602	176,109	146,503	154,931	***	***	***	***	***	***
Production quantity[4 5]	110,200	132,708	118,419	102,531	145,267	146,863	***	***	***	***	***	***
Capacity utilization[1 4 5]	52.9	66.1	57.6	51.3	94.5	90.3	***	***	***	***	***	***
Domestic/U.S. shipments:[7]-												
Quantity	***	***	***	***	***	***	***	***	***	***	***	***
Value	***	***	***	***	***	***	***	***	***	***	***	***
Unit value	(6)	(6)	(6)	(6)	***	***	***	***	***	***	***	***
EOP inventories[8]	***	***	***	***	***	***	***	***	***	***	***	***
Inventories/shipments[1]	***	***	***	***	***[9]	***[9]	***	***	***	***	***	***
Production workers	7,506	9,149	7,694	6,792	***	***	***	***	***	***	***	***
Hours worked	14,509	18,678	15,163	12,973	***	***	***	***	***	***	***	***
Wages paid value	(6)	(6)	(6)	(6)	***	***	***	***	***	***	***	***
Hourly wages	(6)	(6)	(6)	(6)	***	***	***	***	***	***	***	***
Productivity[10]	(6)	(6)	(6)	(6)	***	***	***	***	***	***	***	***

Table continued on next page.

Table TRB I-1--*Continued*

Tapered roller bearings and parts thereof: Comparative data on the U.S. market and industry from the original investigations, first five-year reviews, and the current five-year review, 1983-86, 1997-98, and 2000-05

Item	1983	1984	1985	1986	1997	1998	2000	2001	2002	2003	2004	2005
(Value = *1,000 dollars*; quantity = *1,000 units*; unit values, unit labor costs, and unit financial data are *per unit*; hours worked=*1,000*; and productivity = *units per hour*)												
U.S. producers':												
Net sales	***	***	***	***	***	***[9]	***	***	***	***	***	***
COGS	***	***	***	***	***	***	***	***	***	***	***	***
Gross profit	***	***	***	***	***	***	***	***	***	***	***	***
Operating income or (loss)	***	***	***	***	***	***	***	***	***	***	***	***
Cost of goods sold/ sales[1]	***	***	***	***	***	***	***	***	***	***	***	***
Operating income or (loss)/sales[1]	***	***	***	***	***	***	***	***	***	***	***	***

[1] In percent.
[2] ***.
[3] Includes imports from countries that were subject to the original investigations and/or the first five-year reviews (Hungary, Japan, and Romania) but which are not currently subject to antidumping duty orders.
[4] Capacity and production data exclude parts other than cups, cone assemblies, and sets (which are considered to be complete bearings). For the period 1983-86, capacity was calculated by using a simple average of cups and cone assemblies. Production was calculated using a simple average of cups and cone assemblies and then adding sets. Capacity utilization was determined by using a simple average of data presented for cups and cone assemblies.
[5] For the period 1983-86, the capacity and production data do not include *** because of statistical discrepancies in its questionnaire response.
[6] Not available.
[7] Values include complete bearings (sets) and parts (cone assemblies and cups); quantities for 1983-86 were calculated using a simple average of cups and cone assemblies and then adding sets.
[8] Inventories were calculated for 1983-86 using a simple average of cups and cone assemblies and then adding sets. Inventory data for 1997-98 and 2000-05 are for complete bearings, and exclude parts other than cups, cone assemblies, and sets of TRBs, which are treated as complete bearings.
[9] Calculated as the share of inventories to U.S. shipments.
[10] Productivity calculated on the basis of complete bearings only.

Note.–Value-based and employment data include parts of TRBs. Ten U.S. TRB producers provided data during the original 1985-87 investigations; the 12 reporting U.S. producers for 1997-98 and the 7 reporting U.S. producers for 2000-05 are believed to account for the "majority" of TRB production in the United States, although ***. U.S. import data are derived from official Commerce statistics that (1) were adjusted for 1997-98 to reflect the revocation of the TRB order for Shanghai General Bearing and (2) were adjusted for specified years within the 2000-05 period to reflect the revocations of the TRB order for Shanghai General Bearing, Tianshui Hailin, and Wafangdian.

Source: Data for 1983-86 compiled or derived from confidential staff report INV-K-061 (May 21, 1987); data for 1997-98 compiled or derived from confidential staff report, INV-X-101 (May 8, 2000); and data for 2000-05 compiled from responses to Commission questionnaires and official Commerce statistics, adjusted to exclude companies for which the order has been revoked.

Figure TRB-I-1
Certain tapered roller bearings: U.S. imports from China and all other sources, 1983-2005

* * * * * * *

COMMERCE'S RESULTS OF SUNSET REVIEWS

On October 6, 2005, Commerce determined in its expedited second five-year review that revocation of the antidumping duty order on TRBs from China would likely lead to a continuation or recurrence of dumping.[4] The review covered imports from all manufacturers and exporters of TRBs in China except for the following firms that were determined to have ceased dumping: Shanghai General (excluded in the 1993-94 administrative review),[5] Wafangdian (excluded in the 1998-99 administrative review),[6] and Tianshui Hailin (excluded in the 2000-01 administrative review).[7] Commerce has not conducted any changed circumstances or scope rulings with respect to TRBs from China.[8]

The original margins and sunset margins for the first and second five-year reviews are presented in table TRB I-2. Only two companies, Premier and CMEC, participated in the original investigation. For all other companies the original margin presented in the table is based on the rate received during the first administrative review in which each company participated.[9] Commerce based its margins for the second five-year review on the margins it used during the first five-year review. In its first five-year review, Commerce used dumping margins that corresponded to the period in which a company increased or decreased dumping while that company was increasing or maintaining market share.[10]

---

[4] *Tapered Roller Bearings from the People's Republic of China: Notice of Final Results of Expedited Sunset Review of Antidumping Duty Order,* 70 FR 58383.

[5] Tapered Roller Bearings and Parts Thereof, Finished and Unfinished, from the People's Republic of China: Amended Final Results of the Administrative Review, 69 FR 10423, March 5, 2004. *See also* 62 FR 6189, February 11, 1997.

[6] *Determination to Revoke Order, In Part,* 66 FR 11562, February 16, 2001.

[7] *Determination to Revoke Order, In Part,* 67 FR 68990, November 14, 2002.

[8] Commerce did make two scope rulings in 1989 and 1995 with respect to the 1987 order on Japan: that green rings that had not been heat-treated are within the scope; and that Koyo's rough forgings, including hot, cold, and tower forgings, are within the scope. 64 FR 60266 (November 4, 1999). Commerce noted, however, that these scope rulings are order-specific and did not apply to the orders on TRB imports from the other subject countries. 64 FR 60272 (November 4, 1999).

[9] For companies not specifically investigated or for companies that did not begin shipping until after the order was issued, Commerce typically provided a margin based on the "all others" rate from the investigation.

[10] *Issues and Decisions Memorandum for the Final Results of the Expedited Sunset Review of the Antidumping Duty Order on Tapered Roller Bearings (TRBs) from the People's Republic of China,* September 29, 2005.

Table TRB I-2
Original and five-year review margins for Chinese producers/exporters

Producer/exporter	Original margin *(percent)*	First five-year review margin *(percent)*	Second five-year review margin[1] *(percent)*
CMC	0.39	0.03	0.03
Wanxiang	0.03	0.03	0.03
Zheijiang (ZMC)	4.32	0.11	0.11
Luoyang	1.05	3.20	3.20
Premier	0.97	5.43	5.43
Liaoning	0.00	9.72	9.72
CMEC	4.69	29.40	29.40
ZCCBC	29.40	0.00	0.00
All others	2.96	29.40	29.40

[1] There were two new shippers (Yantai Timken and Peer Bearing-Changshan) during the period of the second five-year review. Commerce applied the rate of 12.25 percent to Peer Bearing-Changshan for June 1, 2000 to January 1, 2001 and the rate of 0.00 percent to Yantai Timken for June 1, 2000 to November 30, 2000. 67 FR 10665, March 8, 2002.

Source: Commerce's antidumping duty order (52 FR 22667, June 15, 1987), as amended by *Tapered Roller Bearings from the People's Republic of China; Amendment to Final Determination of Sales at Less Than Fair Value and Antidumping Duty Order in Accordance with Decision Upon Remand*, 55 FR 6669, Feb. 26, 1990, and Commerce's final results of its first full five-year review (65 FR 11550, March 3, 2000) and second expedited five-year review (70 FR 58383, October 6, 2005).

COMMERCE'S ADMINISTRATIVE REVIEWS

There have been 17 final results of administrative reviews for the subject antidumping duty order on TRBs from China, which are described in table TRB I-3. Commerce has made no duty absorption findings with respect to this order.

Table TRB I-3
Results of administrative reviews relating to tapered roller bearings from China

Producer/ exporter	Period of review	Date results published (including amended results)	Margin[1] *(percent)*
Premier	2/6/87-5/31/88	January 2, 1991 (56 FR 66)	0.97
Premier	6/1/88-5/31/89	January 2, 1991 (56 FR 66)	0.97
CMEC	5/12/89-5/31/90	December 31, 1991 (56 FR 67597) June 10, 1996 (61 FR 29346)	0.00
Guizhou			0.00
Henan			0.00
Jilin			7.07
Liaoning			0.00
Luoyang			1.05
Premier	6/1/89-5/31/90		0.60
Shanghai General			0.00
All others	5/12/89-5/31/90		2.96
Premier	6/1/90-5/31/91	December 13, 1996 (61 FR 65527) August 8, 2000 (65 FR 48478) April 23, 2001 (66 FR 20425)	4.24
Guizhou			2.59
Henan			0.00
Luoyang			1.14
Shanghai General			0.00
Jilin			4.21
Chin Jun			7.07
Wafangdian			7.07
Liaoning			7.07
All others			7.07
Premier	6/1/91-5/31/92	December 13, 1996 (61 FR 65527) April 23, 2001 (66 FR 20425)	5.25
Guizhou			3.70
Henan			0.14
Luoyang			0.00
Shanghai General			0.00
Jilin			5.04
Chin Jun			0.48
Wafangdian			6.15
Liaoning			3.47

Table continued on next page.

Table TRB I-3--*Continued*
Results of administrative reviews relating to tapered roller bearings from China

Producer/ exporter	Period of review	Date results published (including amended results)	Margin[1] *(percent)*
All others	6/1/91-5/31/92	December 13, 1996 (61 FR 65527) April 23, 2001 (66 FR 20425)	7.07
Premier	6/1/92-5/31/93	December 13, 1996 (61 FR 65527) April 23, 2001 (66 FR 20425)	5.25
Guizhou			0.00
Henan			0.00
Luoyang			0.00
Shanghai General			0.25
Jilin			0.00
Chin Jun			1.23
Wafangdian			No sales
Liaoning			0.73
All others			7.07
Premier	6/1/93-5/31/94	February 11, 1997 (62 FR 6189) December 31, 2002 (67 FR 79903) March 5, 2004 (69 FR 10423)	60.95
Guizhou			9.06
Henan			0.61
Luoyang			0.57
Shanghai General[1]			revoked (0.05)
Jilin			60.95
Chin Jun			10.00
Wafangdian			13.36
Liaoning			7.24
CMEC			0.06
CNAC			0.96
Tianshui Hailin			16.55
Zheijiang (ZMC)			10.08
All others			60.95
Premier	6/1/94-5/31/95	February 11, 1997 (62 FR 6173) December 3, 2001 (68 FR 60196)	2.89
Guizhou			17.65
Luoyang			0.00
Jilin			29.40

Table continued on next page.

Table TRB I-3--*Continued*
Results of administrative reviews relating to tapered roller bearings from China

Producer/ exporter	Period of review	Date results published (including amended results)	Margin[1] *(percent)*
Wafangdian	6/1/94-5/31/95	February 11, 1997 (62 FR 6173) December 3, 2001 (68 FR 60196)	29.40
Liaoning			9.72
CMEC			0.00
CNAC			25.63
Tianshui Hailin			24.17
Zheijiang (ZMC)			3.04
Xiangfan			0.00
East Sea			3.60
All others			29.40
Wanxiang	6/1/95-5/31/96	November 17, 1997 (62 FR 61276) July 12, 2002 (67 FR 46176)	0.11
Shandong			19.13
Luoyang			3.84
CMC			3.05
Xiangfan			0.49
Guizhou			31.05
Zheijiang (ZMC)			0.17
Jilin			31.05
Liaoning			0.61
Premier			5.60
Peer Bearing & Chin Jun			3.07
All others			31.05
Wafangdian	6/1/96-5/31/97	November 17, 1998 (63 FR 63842)	0.00
Luoyang			3.20
CMC			0.03
Xiangfan			33.18
Zheijiang (ZMC)			0.11
Wanxiang			0.00
Liaoning			0.02
Premier			7.22[4]
Chin Jun			0.05[4]

Table continued on next page.

Table TRB I-3--*Continued*
Results of administrative reviews relating to tapered roller bearings from China

Producer/ exporter	Period of review	Date results published (including amended results)	Margin[1] *(percent)*
ZX	6/1/96-5/31/97	November 17, 1998 (63 FR 63842)	0.00
All others			33.18
Luoyang	6/1/97-5/31/98	July 8, 1999 (64 FR 36857) January 15, 2004 (69 FR 2331)	5.15
Premier			24.55
All others			33.18
Zheijiang (ZMC)	6/1/98-5/31/99	January 10, 2001 (66 FR 1953) February 26, 2001 (66 FR 11562) April 13, 2005 (70 FR 19421)	0.00
Luoyang			3.85
CMC			0.78
Premier			7.36
Wafangdian			revoked
Wehai			0.00
All others			33.18
Zhejiang	6/1/99-5/31/00	November 15, 2001 (66 FR 57420)	0.03
Luoyang			0.49
CMC			4.64
Premier			33.18
Wanxiang			0.00
Tianshui Hailin			0.00
Weihai			0.00
All others			33.18
Zheijiang (ZMC)	6/1/00-5/31/01	November 14, 2002 (67 FR 68990) December 4, 2002 (67 FR 72147)	0.53
Luoyang			0.06 (de minimis)
CMC			0.71
Wanxiang			0.00
Tianshui Hailin			revoked
All others			33.18
Yantai Timken	6/1/01-5/31/02	December 18, 2003 (68 FR 70488) December 31, 2003 (68 FR 75489)	0.00
Peer Changshan			0.00
All others			33.18
Shanghai United	6/1/02-5/31/03	July 13, 2004 (69 FR 42041)	0.00

Table continued on next page.

Table TRB I-3--*Continued*
Results of administrative reviews relating to tapered roller bearings from China

Producer/ exporter	Period of review	Date results published (including amended results)	Margin[1] *(percent)*
All others	6/1/02-5/31/03	July 13, 2004 (69 FR 42041)	60.95
Luoyang	6/1/03-5/31/04	January 17, 2006 (71 FR 2517) February 24, 2006 (71 FR 9521)	0.44 (de minimis)
CMC			0.00
Yantai Timken			41.58

[1] Listed margins reflect the most recently available amended results.
[2] On February 11, 1997, Commerce revoked the order with respect to Shanghai General. 62 FR 6189. On February 26, 2001, Commerce revoked the order with respect to Wafangdian Bearing Factory. 66 FR 11562. On November 14, 2002, Commerce revoked the order with respect to Tianshui Hailin. 67 FR 68990.

Source: Cited *Federal Register* notices

DISTRIBUTION OF CONTINUED DUMPING AND SUBSIDY OFFSET FUNDS TO AFFECTED DOMESTIC PRODUCERS

The Continued Dumping and Subsidy Offset Act of 2000 ("CDSOA") (also known as the Byrd Amendment) provides that assessed duties received pursuant to antidumping or countervailing duty orders must be distributed by U.S. Customs and Border Protection ("Customs") to affected domestic producers for certain qualifying expenditures that these producers incur after the issuance of such orders.[11] Table TRB I-4 presents CDSOA claims and disbursements for Federal fiscal years (October 1-September 30) 2001-05 relating to the antidumping duty order on TRBs from China under review. During the 2001-05 period, approximately $9 to $12 billion of qualifying expenditures were claimed annually by U.S. producing entities, and approximately $9 million was disbursed by Customs to the firms during the period.

[11] Section 754 of the Tariff Act of 1930, as amended (19 U.S.C. § 1675(c)).

Table TRB I-4
Tapered roller bearings: CDSOA claims and disbursements, Federal fiscal years 2001-05

Item	2001	2002	2003	2004	2005	2001-05	2001-05
	Value *($1,000 dollars)*						(*Percent*)
Amount of claim filed:[1]							
Timken	9,054,818	9,913,743	10,821,053	11,626,070	11,606,064	([2])	([2])
Torrington/ Timken, Total	145,811	155,733	166,009	174,308	190,575	([2])	([2])
Total	9,200,629	10,069,476	10,987,063	11,800,378	11,796,639	([2])	([2])
Amount disbursed:[3]							
Timken	148	1,865	2,071	2,685	1,964	8,733	98.5
Torrington/ Timken, Total	2	29	32	40	32	136	1.5
Total	150	1,895	2,102	2,725	1,996	8,869	100.0

[1] Qualifying expenditures incurred by domestic producers since the issuance of an order, as presented in Section I of Customs' CDSOA *Annual Reports.*
[2] Not applicable.
[3] Disbursements as presented in Section I of Customs' CDSOA *Annual Reports*.

Source: U.S. Customs and Border Protection's CDSOA *Annual Reports*. Retrieved at www.cbp.gov/xp/cgov/import/add_cvd/.

THE SUBJECT PRODUCT

For purposes of this review, Commerce has generally defined TRBs and parts thereof, whether finished or unfinished, as antifriction bearings that employ tapered rollers as the rolling element. Included in the scope are tapered rollers; outer races or cups, whether sold as a unit or separately; inner races or cone assemblies, whether sold as a unit or separately; rough forgings; flange, take-up, cartridge, and hanger units incorporating TRBs; and tapered roller housings (except pillow blocks) incorporating tapered rollers, with or without spindles, whether or not for automotive use.

The subject TRBs and parts for TRBs are primarily classified under the following HTS subheadings: 8482.20.00, 8482.91.00, 8482.99.15, 8482.99.45, 8483.20.40, and 8483.20.80. Additional parts and products that contain TRBs may also be classified under HTS subheadings 8483.30.80, 8483.90.20, 8483.90.30, 8483.90.70, 8483.90.80, and 8708.99.80.

A TRB is made up of four basic components–the cup, the cone, the cage, and the rollers. The cup, also called the outer ring, is the largest part of the assembly, and its inner surface is tapered to conform with the angle of the roller assembly. The cone forms the inner race of the bearing, while the cage keeps the rollers equally distributed around the cup and cone. The rollers, cage, and cone are joined together to form a cone assembly. When joined with a cup, the cone assembly and cup form a TRB set. TRBs provide combined radial and thrust load capability.

U.S. Tariff Treatment

The column 1-general, or normal trade relations ("NTR"), rate of duty for assembled TRBs is 5.8 percent *ad valorem*. The general duty rates for most parts of these bearings range from 4.4 percent to 5.8 percent *ad valorem*, while imports of complete housed TRBs are subject to a general duty rate of 4.5

percent *ad valorem*. These duty rates are final Uruguay Round concession rates and, thus, are not subject to further proclaimed reductions. General rates of duty for additional parts, products containing TRBs, and those goods included as a result of scope determinations range from 2.5 percent to 5.5 percent *ad valorem*.

DOMESTIC LIKE PRODUCT ISSUES

In its original 1987 determinations concerning TRBs from China, Hungary, Japan, and Romania, the Commission found a single like product consisting of tapered roller bearings and parts thereof, finished or unfinished; flange, take-up, cartridge, and hanger units incorporating TRBs; and tapered roller housings (except pillow blocks) incorporating tapered rollers, with or without spindles, and whether or not for automotive use.[12] The Commission in the original investigations on antifriction bearings other than TRBs considered, but rejected, petitioner's argument for a single domestic like product.[13] In its first five-year review determinations, the Commission found that TRBs, BBs, CRBs, and SPBs were separate domestic like products consistent with Commerce's scope definitions.[14]

For purposes of the notice instituting the current five-year reviews, the parties were instructed to report information on three domestic industries, each devoted to the production of one of the following three domestic like products: (1) BBs, (2) SPBs, and (3) TRBs. The domestic interested parties, INA, Nachi-Fujikoshi, Nachi Technology, Nachi America, NMB/Pelmec, NSK, and NTN indicated in their responses to the Commission's notice of institution in these reviews that they agreed with the Commission's definitions of domestic like products and domestic industry as consisting of (1) BBs, (2) SPBs, and (3) TRBs.[15] Similarly, the domestic interested parties as well as respondent interested party CCCME indicated in their prehearing briefs that they also supported the Commission's definitions of domestic like products.[16]

---

[12] *Tapered Roller Bearings and Parts Thereof, and Certain Housings Incorporating Tapered Rollers from Hungary, the People's Republic of China, and Romania, Investigations Nos. 731-TA-341, 344, and 345 (Final),* USITC Publication 1983, June 1987, p. 9. The Commission's first determination on TRBs from Japan contained no like product analysis. *Tapered Roller Bearings and Certain Components Thereof from Japan, Investigation No. AA1921-143*, USITC Publication 714, January 1975. The Commission's second determination on TRBs from Japan reached the same conclusions regarding like product as were found in the above-cited investigations involving Hungary, China, and Romania. *Tapered Roller Bearings and Parts Thereof, and Certain Housings Incorporating Tapered Rollers from Japan*, Investigation No. 731-TA-343 (Final), USITC Pub. 2020, September 1987, pp. 3-8.

[13] *Antifriction Bearings (Other than Tapered Roller Bearings) and Parts Thereof from the Federal Republic of Germany, France, Italy, Japan, Romania, Singapore, Sweden, Thailand, and the United Kingdom*, Investigations Nos. 303-TA-19 and 20 (Final) and 731-TA-391 through 399 (Final), USITC Pub. 2185, May 1989, pp. 14-18.

[14] *Certain Bearings From China, France, Germany, Hungary, Italy, Japan, Romania, Singapore, Sweden, and the United Kingdom, Investigations Nos. AA1921-143, 731-TA-341, 731-TA-343-345, 731-TA-391-397, and 731-TA-399 (Review),* USITC Publication No. 3309, June 2000, p. 12. As noted earlier, the Commission subsequently reached negative determinations with respect to the outstanding orders on CRBs.

[15] Caterpillar indicated that it did not challenge the Commission's definitions and Koyo (JTEKT) indicated that it took no position on the Commission's definitions. No other interested parties responding to the Commission's notice of institution provided any comments concerning the Commission's definitions.

[16] Domestic interested parties' prehearing brief, p. 1, and CCCME's prehearing brief, p. 10. Respondent interested party SKF, which also produces TRBs in both the United States and China, likewise indicated its support of the Commission's definition of the domestic like product. SKF's prehearing brief, pp. 2-3.

Physical Characteristics and Uses

TRBs are used in applications where it is necessary to counteract friction caused by both radial and thrust loads (figure TRB-I-2). TRBs are able to withstand such combined loads while offering moderate speed capacity and heavy load capacity. The primary end market for this type of bearing is the automotive industry.[17] TRBs are also used extensively in the heavy machinery sector–primarily construction and agricultural equipment–as well as the railroad and general industry sectors. More specifically, TRBs are widely used in these industries in transmissions and wheel applications.[18] According to data collected in response to Commission questionnaires, the majority of U.S. and foreign producers and U.S. importers claim that there have not been any changes in the end uses of TRBs since the first reviews, and no changes in end uses are expected in the future.

Figure TRB-I-2.–Tapered roller bearing

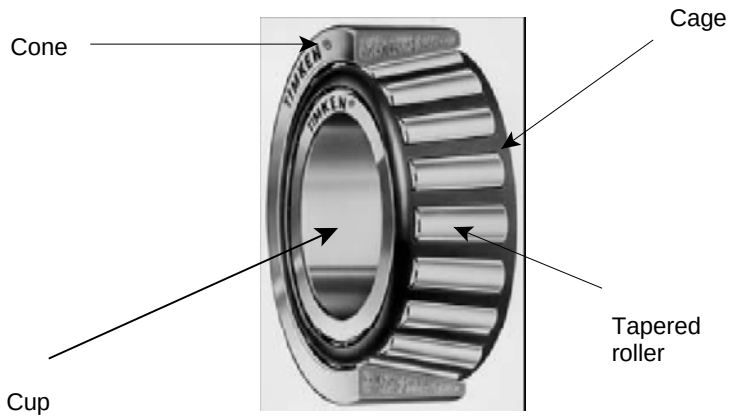

Source: The Timken Corporation.

Respondent interested party CCCME claims that there is only limited competition between Chinese and U.S. TRBs because all Chinese TRBs exported to the United States are through-hardened whereas domestic TRBs are all, or virtually all, case-carburized. Case-carburized steel reportedly costs twice the price of the chrome steel used to produce through-hardened bearings, resulting in a bearing "price that is substantially higher than the price of through-hardened bearings..." CCCME further asserts that "major U.S. purchasers will specify case-carburized TRBs..." when superior performance is important to the application.[19] CCCME also contends that Chinese producers are not qualified by major OEM purchasers due to the OEM requirements for case-carburized TRBs, which subject Chinese producers do not export to the United States.[20]

The domestic interested parties argue that Chinese TRB producers manufacture "a broad range of TRBs that compete directly with U.S.-produced TRBs, including TRB part numbers that account for 95 percent of the volume of one of Timken's major TRB facilities and between 40-50% of the volume of two other major Timken TRB facilities." They also state that Chinese TRB producers have "increased

[17] *Certain Bearings From China, France, Germany, Hungary, Italy, Japan, Romania, Singapore, Sweden, and the United Kingdom, Investigations Nos. AA1921-143, 731-TA-341, 731-TA-343-345, 731-TA-391-397, and 731-TA-399 (Review),* USITC Publication No. 3309, June 2000, p. TRB-I-20.

[18] Ibid.

[19] CCCME's posthearing brief, part I, pp. 6-7.

[20] CCCME's posthearing brief, part II, p. 5 and p. 7, n. 18.

access to better quality steel *** and improved machine tools to produce high-quality TRBs." Moreover, domestic supporters claim that they are aware of ***.[21]

The domestic interested parties further allege that qualification/certification requirements do not present a significant barrier to increased TRB imports from China, noting that a significant share of U.S. TRB sales do not require such certification and that major Chinese TRB producers already meet many common international certification standards.[22] However, CCCME claims that "there is no evidence that any subject producer has qualified its bearings to displace domestic bearings at any major OEM account."[23]

As shown in the tabulation below , while some TRBs are sold as a customized product, ***.[24] The following tabulation presents the shares of the value of shipments in 2005 of standard and custom TRBs reported in response to Commission questionnaires:

* * * * * * *

Table TRB I-5 presents the shares of shipments for a series of end-use categories for both standard and custom bearings. With respect to standard bearings, *** domestically produced bearings were shipped to the OEM automotive segment while *** subject imports were classified within the "all other" OEM category. With respect to the *** smaller custom bearing segment, domestically produced TRBs were *** reported within the agricultural and construction mining OEM and the automotive OEM categories while U.S. imports from China were shipped *** to the automotive aftermarket. The domestic interested parties contend, however, that "Table TRB I-5 is, {not} by itself, an accurate reflection of the array of end use markets for TRBs or sales by Chinese exporters."[25]

Table TRB-I-5
Tapered roller bearings: U.S. shipments, by standard and custom and by end-use categories, 2005

* * * * * * *

Note.–Custom bearings were defined in the Commission questionnaires as those that (1) have a non-catalog number; (2) have a specific drawing number; (3) have a customer-specific part number; or (4) have been otherwise manufactured to a customer's specific order. Standard bearings are all other "off the shelf" bearings. OEM refers to original equipment manufacturers and AM refers to the aftermarket.

---

[21] Domestic interested parties' posthearing brief, p. 6.

[22] Domestic interested parties' posthearing brief, p. 5.

[23] CCCME's posthearing brief, part I, p. 2.

[24] *See* the note to table TRB-I-5 for the definitions of standard and custom used in Commission questionnaires. The definitions of standard and custom bearings are based on proposals by interested parties in the first and second set of comments on the draft questionnaires circulated by Commission staff. *See* staff e-mail, dated November 11, 2005, where parties were requested to comment on whether the terms standard and custom bearings were clearly demarcated in the industry. However, domestic interested parties claim that the terms custom and standard "are not specifically defined, commonly used, or uniformly understood" in the TRB industry. Domestic interested parties' posthearing brief, exh. Koplan, p. 22.

[25] Domestic interested parties highlight several points that include: (1) ***; (2) ***; and (3) ***. Domestic interested parties' posthearing brief, p. Koplan 22. The data in table TRB-I-5 are based upon responses from U.S. importers (the most significant of which for TRBs from China was *** in 2005). ***. According to the foreign producer/exporter questionnaire submitted by ***, "***." ***. ***.

Manufacturing Process

The manufacturing process for antifriction bearings, including TRBs, is described in the section entitled *The Product* in the *Introduction and General Overview* to this report. TRBs are generally produced on dedicated machinery, and a producer cannot switch production of TRBs to other types of bearings without reconfiguration of production lines, which adds to costs. Thus, firms cannot easily switch from producing one type of bearing to another. U.S. and foreign producers stated that their firms were unable to switch production between certain TRBs and other products in response to relative price changes between products. Questionnaire data also indicate that U.S. and foreign producers have not, and do not anticipate, producing other products on their equipment and machinery and/or with the same production workers manufacturing certain TRBs. In response to questionnaires, foreign producers largely indicated that there have been no significant changes in production technology for TRBs since the first review. The Commission noted in its 1989 determinations that many producers make only one type of bearing while those larger producers that produce several types of bearings routinely rationalize their production of antifriction bearings by the type of rolling element employed. The Commission found, "(f)or each rolling element, a separate manufacturing facility is generally utilized."[26]

Interchangeability and Customer and Producer Perceptions

While a majority of responding producers, importers, and purchasers stated that U.S. and Chinese TRBs were always or frequently interchangeable, other respondents did raise issues such as lower quality for some types of Chinese TRBs as being barriers to interchangeability. Timken claims that its existing capacity provides large numbers of high volume, standard TRBs to automotive, industrial, and aftermarket customers, and that these same bearings are available from many Chinese TRB producers.[27] As discussed earlier, CCCME contends that the subject imports do not compete with Timken's domestic TRB production because of the lack of certification of Chinese TRB producers and their use of through-hardened rather than case-carburized steel.[28] *See* Part II of this chapter for a complete discussion of product interchangeability.

Channels of Distribution

Both domestically produced and subject imports are sold *** to end users/OEMs. According to questionnaire data, U.S. producers shipped *** percent of their U.S. shipments of TRBs to end users/OEMs in 2005, and the remaining *** percent to distributors/aftermarket customers (table TRB I-6).[29] By comparison, *** percent of subject imports of TRBs were to end users/OEMs in 2005 and the remaining *** percent to distributors/aftermarket customers.

Table TRB-I-6
Tapered roller bearings: Channels of distribution, 2000-05

* * * * * * *

[26] *Antifriction Bearings (Other than Tapered Roller Bearings) and Parts Thereof from the Federal Republic of Germany, France, Italy, Japan, Romania, Singapore, Sweden, Thailand, and the United Kingdom*, Investigations Nos. 303-TA-19 and 20 (Final) and 731-TA-391 through 399 (Final), USITC Pub. 2185, May 1989, p. 17.

[27] Hearing transcript, p. 16 (Stewart).

[28] CCCME's posthearing brief, p. 7.

[29] "Buy-American" sales were insignificant throughout the period examined.

Price

The global market for antifriction bearings was characterized as highly price-competitive during the first five-year reviews.[30] The majority of Chinese producers responding to the foreign producers' questionnaire in the current five-year review reported not being able to make a comparison between home, U.S., and third-country TRB prices because of product mix differences between various markets or a reported lack of familiarity with such markets.

U.S. MARKET PARTICIPANTS

U.S. Producers

At the time of the original investigations, there were 9 responding U.S. producers of TRBs while 12 firms reported producing TRBs in the United States during the period of the first five-year reviews. Seven TRB producers reported data for the period covered in the current five-year review (table TRB I-7). As indicated earlier in this chapter, some small producers (American Roller Bearing Industries and Nucor) have shutdown or, in the case of General Bearing, *** their U.S. production operations for TRBs. One additional firm, NSK, began what it labels "***" production in the United States in 2001. In addition, NN, a bearing parts manufacturer, added capacity to produce parts for TRBs in 2001 when it acquired the Delta Rubber Co. plant that produces seals.[31]

---

[30] *Certain Bearings From China, France, Germany, Hungary, Italy, Japan, Romania, Singapore, Sweden, and the United Kingdom, Investigations Nos. AA1921-143, 731-TA-341, 731-TA-343-345, 731-TA-391-397, and 731-TA-399 (Review),* USITC Publication No. 3309, June 2000, p. TRB-I-23.

[31] ***.

Table TRB-I-7
Tapered roller bearings: U.S. producers' positions on continuation of the order, shares of the value of reported U.S. shipments in 2005, locations of production facilities, parent firms, and related foreign producers

Firm	Position on continuation of the order	Shares of the value of reported U.S. shipments (*percent*)	Parent firm(s)	Related TRB foreign producer(s)
Koyo Corp.	Oppose	***	JTEKT Corp. (Japan)	Kagwa plant (Japan); Koyo Manufacturing (Thailand) Co., Ltd.; Koyo Bearings (Europe) Ltd., (United Kingdom); Koyo Romania S.A.; Koyo Automotive Parts (Wuxi) Co., Ltd. (China)
Nakanishi Mfg. Corp.	***	***	Nakanishi Metal Works Co., Ltd. (Japan)	Nakanishi Metal Works (Japan); NKC Mfg. Philippines Corp.
NN, Inc.	***	***	None	NN Europe with factories in Germany, Italy, and the Netherlands
NSK Corp.	Oppose	***	NSK Americas, Inc. (Ann Arbor, MI)–*** Holding Co.; NSK Japan --owns *** NSK Americas	NSK Japan, Timken-NSK (China); NSK Bearings Manufacturing (Thailand) Co., Ltd.
NTN-USA Corp. (NTN-Bower and ANBM)	Oppose	***	NTN Corp. (Japan)	NTN Corp. (Japan)
SKF USA	Oppose	***	AB SKF (Sweden)	China: Shanhai SKF; Beijing Nankou SKF Other: SKF Poznan S.A. (Poland); SKF do Brasil Limitada (Brazil); SKF de Mexico S.A. de C.V.; SKF GmbH (Germany); SKF Industrie S.p.A. (Italy)
The Timken Co. (Timken U.S. Corp., and MPB Corp.)	Support	***	Timken U.S. Corp. (Torrington, CT) and MPB Corp. (Keene, NH) are wholly owned subsidiaries of The Timken Co. (Canton, OH)	China: Timken-NSK; Yantai Timken Other: Jamshedpur plant (India); Sao Paulo plant (Brazil); Colmar plant (France); Brescia plant (Italy); Sosnowiec plant (Poland); Poloiesti plant (Romania), Benoni plant (South Africa); St. Thomas plant (Canada)
Total	--	100.0	--	--

Note.–Shares of shipments are based on complete TRBs and parts of TRBs. Firms listed above that reported the production of TRB parts consist of: ***.

Source: Compiled from data submitted in response to Commission questionnaires.

The structure of the U.S. industry is, however, comparable to past periods examined with Timken, the world's largest producer of TRBs, producing *** TRBs in the United States.[32] As shown in table TRB I-7, Timken accounted for *** percent of the value of reported U.S. producers' U.S. shipments of TRBs; in 1998, it accounted for *** percent of the value of reported U.S. producers' U.S. shipments of TRBs.[33] Table TRB I-8 provides information reported by firms in their producer questionnaire responses on changes in the character of firm operations or organization relating to the production of TRBs since January 1, 2000.

Table TRB-I-8
Tapered roller bearings: Reported changes in the character of firms' operations or organization relating to the production operations since January 1, 2000

Firm	Plant location(s)	Time period	Reported change[1]
Nakanishi	Not provided	2003	***.
NN	Danielson, CT	Feb. 2001	***.
NSK	Franklin, IN	2001	***.
NTN	Macomb, IL (ANBM)	2003	***.
Timken	*Plant changes (other than ***)*		
	Columbus, OH	2001	***.
	--	2002	***.
	Winchester, KY	2002	***.
	Ashland, OH	2002	***.
	--	2003	***.
	--	2003	***.
	Plant changes (***)		
	Asheboro, NC	2000	***.
	Gaffney, SC	2000	***.
	Altavista, VA	2000	***.
	Lincolnton, NC	2000	***.
	Lincolnton, NC	2001	***.
	Gaffney, SC	2002	***.
	Altavista, VA	2004	***.

Table continued on next page.

[32] Timken is the inventor of TRBs and is reported to represent about one-third of total world production. John Tucker, The U.S. Ball and Roller Bearing Industry Since World War II, p. 9.

[33] Shares of U.S. producers' shipments for 1998 are obtained from the confidential staff report INV-X-101 (May 8, 2000), pp. I-24 and I-25.

Table TRB-I-8--*Continued*
Tapered roller bearings: Reported changes in the character of firm operations or organization relating to the production of tapered roller bearings since January 1, 2000

Firm	Plant location(s)	Time period	Reported change[1]
Timken	*Plant changes (***)–continued*		
	Lincolnton, NC	2004	***.
	Gaffney, SC	2004	***.
	Gaffney, SC	2005	***.
	Production curtailment		
	Lincolnton, NC	2003	***.
	Revision of labor agreements		
	Not specified	2000-05	***
	Any other changes		
	Not specified	2001	***.

[1] Reported changes consist of (1) plant openings, relocations, expansions, acquisitions, consolidations, closures, or prolonged shutdowns; (2) curtailment of production; (3) revision of labor agreements; or (4) any other changes. Only changes that apply to firm's U.S. operations are listed in this table.

Note.–In its response to the notice of institution of the reviews, Timken included a cite to a news article where it announced it will be closing the Tryon Peak profile ring mill operation near Columbus, NC by year-end 2004 or early 2005. The portion of the operation dedicated to TRB rings reportedly is now closed. Response, p. 23, citing to eBearing News (August 4, 2004). The following firm reported not having experienced any changes in the character of its operations since January 1, 2000: ***. *** did not respond to this question.

Source: Compiled from data submitted in response to Commission questionnaires.

For plant locations *see* the following tabulation.

Firm	Plant location(s)[1]
Koyo	Westlake, OH (Orangeburg plant)
Nakanishi	Winterville, GA
NN	Danielson, CT
NTN-USA	Elgin, IL (NTN-Bower); Macomb, IL (ANBM)
NSK	Franklin, IN
Timken	Canton, GA (parts); Union, SC; Randleman, NC; Bucyrus, OH; Canton OH (3 plants, one of which produces parts); Gaffney, SC; Iron Station, NC; New Philadelphia, OH; Altavista, VA; Ashland, OH (sold 2002); Columbus, OH (closed 2001); Columbus, NC (closed forming and machining operations in 2004); Winchester, KY (spun-off assets in 2002)
SKF	Aiken, SC

[1] Location, for some firms, may refer to headquarters.

Source: Compiled from data submitted in response to Commission questionnaires.

Both the UAW and the USW support the continuation of the antidumping duty order on TRBs from China. The following tabulation provides a list of facilities producing TRBs that employ workers represented by these unions:[34]

Company (subsidiary/plant)	Facility location	Representation
NTN Corp. (NTN Bower)	Hamilton, AL	UAW
RBC Bearings, Inc. (Tyson Bearing Co. Inc.)	Glasgow, KY	USW
SKF	Hanover, PA	USW
Timken (Canton Bearing Plant)	Canton, OH	USW
Timken (Gambrinus Bearing Plant)	Gambrinus, OH	USW
Timken (Gambrinus Roller Plant)	Gambrinus, OH	USW

The following tabulation summarizes U.S. producers' positions regarding revocation of the TRB antidumping duty order for China and the shares of the value of U.S. shipments held by U.S.-domiciled and foreign-domiciled U.S. TRB producers in 1998 and in 2005 (*see* table TRB-I-7):

* * * * * * *

U.S. Importers

As shown in table TRB I-9, *** is the single largest U.S. importer of TRBs from China. ***, accounted for the majority of the TRB imports from China during the first five-year reviews. ***. Data on U.S. producers' imports of TRBs are presented in part III.

Table TRB-I-9
Tapered roller bearings: U.S. importers' subject U.S. imports in 2005, shares of the reported value of reported subject U.S. imports, parent firm(s), and related domestic manufacturer(s)

* * * * * * *

U.S. Purchasers

Major purchasers of TRBs include ***. The largest reporting purchaser's total purchases accounted for less than *** percent of U.S. consumption in 2005, and a majority of TRB purchasers that reported purchases (especially the larger purchasers) purchased TRBs from more than one country.

TRB purchasers were asked if related firms imported or produced certain bearings. Sixteen said no related firms, domestic or foreign, imported certain bearings. Nine (***) said related firms did import. (While *** answered that no related firms imported bearings, it listed affiliated companies.) Twenty-four purchasers said no related firms produced bearings, while five (*** indicated they had related firms producing bearings. (While *** did not respond that related firms produce bearings, nevertheless the Commission received questionnaire responses from firms related to *** producing bearings.)

[34] Compiled from letter submitted by counsel to the domestic interested parties, May 16, 2006.

APPARENT U.S. CONSUMPTION AND MARKET SHARES

The demand for TRBs is derived from its end-use markets, primarily the motor vehicle and parts, heavy equipment, railroad equipment, and industrial machinery industries, as well as the aftermarket. Table TRB I-10 presents data on U.S. apparent consumption and U.S. market shares of TRB suppliers and table TRB-I-11 presents data on the ratio of subject imports to U.S. production. The value of apparent consumption of TRBs fell by *** percent from 2000 to 2001 but then rose steadily over the next four years for a period rise of *** percent from 2000 to 2005 (table TRB-I-10). The market share held by U.S. producers fell each year from 2001 onward as the market share of U.S. imports from nonsubject sources steadily increased. The market share of subject U.S. imports from China remained near or below *** percent throughout the period examined.

Table TRB-I-10
Tapered roller bearings: U.S. shipments of domestic product, U.S. imports, by sources, apparent U.S. consumption, and market shares, 2000-05[1]

Item	2000	2001	2002	2003	2004	2005
			Value *(1,000 dollars)*			
U.S. producers' shipments	***	***	***	***	***	***
U.S. imports from –						
China (subject)[2]	***	***	***	***	***	***
China (nonsubject)[2]	***	***	***	***	***	***
Canada	63,275	45,114	43,817	47,350	54,640	74,744
Germany	17,045	13,093	17,428	19,736	30,666	30,659
Japan	62,349	55,123	74,182	117,568	157,205	198,275
United Kingdom	16,083	11,894	7,984	5,395	5,193	5,836
All others	77,530	69,255	86,039	118,944	145,991	203,038
Subtotal (nonsubject)	***	***	***	***	***	***
Total imports	266,064	219,703	262,777	341,748	439,414	583,024
Apparent consumption	***	***	***	***	***	***
			Share of value *(percent)*			
U.S. producers' U.S. shipments	***	***	***	***	***	***
U.S. imports from –						
China (subject)[2]	***	***	***	***	***	***
China (nonsubject)[2]	***	***	***	***	***	***
Canada	***	***	***	***	***	***
Germany	***	***	***	***	***	***
Japan	***	***	***	***	***	***
United Kingdom	***	***	***	***	***	***
All others	***	***	***	***	***	***
Subtotal (nonsubject)	***	***	***	***	***	***
Total imports	***	***	***	***	***	***

[1] These data are for both complete bearings or bearing equivalents and parts.
[2] Import values for subject China are adjusted to reflect the revocation of the TRB orders on China as they relate to Shanghai General, Tianshui Hailin, and Wafangdian. Imports for those firms are included under nonsubject China.

Source: Compiled from data submitted in response to Commission questionnaires and from official Commerce statistics.

Table TRB-I-11
Tapered roller bearings: U.S. production, subject imports from China, and ratio to production, 2000-05

* * * * * * *

PART II: CONDITIONS OF COMPETITION IN THE U.S. MARKET

INTRODUCTION

A wide variety of industries demand TRBs, and that demand has risen since 2000. There are multiple U.S. suppliers as well as major import sources, but there have been some reports of tight supply in recent years. Purchasers include major automotive and agricultural equipment manufacturers.

U.S. MARKET SEGMENTS

TRBs are sold by suppliers (producers and importers) to either OEMs or distributors. Distributors assist customers with maintenance, repair, and expertise in selecting the appropriate replacement bearing.[1] TRBs for OEMs may be custom-designed while TRBs for distributors are more likely to fit into slightly broader categories to be sold to the aftermarket.[2] Domestic interested parties stated that supplying the OEM market is often important for supplying the aftermarket, as aftermarket sales are often of the same brand as the parts they are replacing.[3] Regardless of whether they are sold to OEMs or distributors, though, TRBs are sold in a wide variety of specifications.

Some TRBs are sold to U.S. defense industries that may have U.S.-made requirements as specified in the Defense Federal Acquisition Regulation ("DFAR"). When asked if there were any "Buy American" requirements in the U.S. market, five producers and seven importers[4] answered that there were, while one producer[5] and seven importers answered that there were not. *** explained that "Buy American" regulations may change year-to-year and may be subject to waivers on occasion. *** explained that even when export control or defense regulations are not the reason for favoring U.S.-made bearings, some aerospace customers prefer U.S.-made bearings so that the bearing producer could share liability in the event of the catastrophic failure of an aircraft part.

Geographic Markets

TRBs are generally sold to national markets. Five producers and 18 importers indicated that they serve a national market, while only one producer and eight importers indicated that they primarily serve smaller regional markets.

---

[1] Hearing transcript, p. 232 (Hooser).

[2] The CCCME stated that standard (i.e., non-custom) TRBs should not be construed automatically to mean "low-cost" TRBs, and added that there are significant differences in engineering between TRBs from the United States and China. Hearing transcript, pp. 243-244 (Greenwald). Specifically, the CCCME described Timken's TRBs as being case carburized while Chinese TRBs are through hardened, making Timken's products allegedly higher value and more durable. CCCME's posthearing brief, pp. 5-8.

[3] Hearing transcript, pp. 166-167 (Swinehart and Griffith).

[4] The following firms submitted both an importer's and a producer's questionnaire: ***. For the purposes of this section, the responses of these firms have been counted both as a producer and as an importer. In almost all cases, the answers to the producer's and importer's questionnaires were substantially similar or identical as the firm often referred to its response in the other questionnaire.

[5] Producer *** stated that DFAR requirements for ball and roller bearings had lapsed.

SUPPLY AND DEMAND CONSIDERATIONS

U.S. Supply

The major suppliers of TRBs in the U.S. market are U.S. producers (some of whom are affiliated with multinational companies either based in the United States or other countries) and importers of nonsubject country TRBs. Imports from China are currently a small part of the U.S. market.

Domestic Production

Based on available information, U.S. TRB producers are likely to respond to changes in demand with moderate to small changes in the quantity of shipments of U.S.-produced TRBs to the U.S. market. The main contributing factors to this degree of responsiveness of supply are the high levels of capacity utilization and moderately low levels of inventories and export shipments.[6]

Producers and importers were asked if there were any changes in factors of supply[7] that had affected the availability of U.S.-produced TRBs in the U.S. market since January 2000. Four producers and 15 importers answered no while two producers and nine importers answered yes, citing increased energy, labor, medical and transportation costs, as well as continued imports from other countries.[8]

Purchasers were also asked if there had been any changes in the factors affecting supply since January 1, 2000. Twenty-six TRB purchasers said yes, and five said no. Most firms that answered yes described increased raw material (steel, natural gas, etc.) prices driving decreased availability of TRBs. *** remarked that it had seen tighter worldwide supply for the last year and a half due to worldwide steel shortages. It continued that lead times had increased, but that prices had increased only moderately and at roughly the same rate as inflation. *** stated that steel availability became limited in 2004, forcing the price of bearing quality steel up 30 to 40 percent. *** estimated that raw material costs had risen 40 to 50 percent in the last two years. *** described present availability (since 2004) as "terrible." *** attributed price increases to *** controlling a large segment of the steel for bearings and not being able to increase output in 2004 and 2005. *** noted that large-bore TRBs are in particularly short supply. *** attributed the "rapid escalation" in TRB demand to the economic expansion of China and India as well as continued growth in the United States and Japan.

Purchasers were asked if they had experienced a supply shortage of any certain bearings and/or had been placed on allocation. Seven TRB purchasers answered no, though two of those noted there had been longer lead times. Twenty-three TRB purchasers answered yes. *** noted that the shortage was particularly acute for large-bore products. *** specified low value-added parts, such as ***, as difficult to acquire without "paying steep price increases."

At the hearing, purchasers Eaton, Caterpillar, and Deere reported being placed on allocation by Timken, and said that these allocations had caused lost sales and business disruptions.[9] Also at the hearing, Timken said that allocations were due to simultaneous, large, and unanticipated increases in

---

[6] CCCME stated that Timken's transformation to a global TRB manufacturer has allowed Timken to produce "low-end" TRBs offshore while producing higher quality TRBs in the United States, thus making Timken less vulnerable to injury from Chinese imports. CCCME's prehearing brief, pp. 6-7.

[7] The question specified changes other than increased raw material costs.

[8] *** cited continued dumping by foreign competitors while *** cited overseas production by firms such as Timken and NSK. Producers were also asked if they anticipated any changes in the availability of U.S.-produced certain bearings in the U.S. market in the future. Three anticipated no change, while three predicted a decrease. *** explained that it and its competitors had increased capacity, and thus expected to see an overcapacity situation by 2008.

[9] Hearing transcript, pp. 254 (Dedoncker), 262 (Tefft), and 348 (Horack).

demand for TRBs from multiple end-use segments, including railroad, truck, SUV, and agricultural. It added that most of the allocations are now finished, though some remain in specific sectors such as aerospace.[10]

Four producers and 19 importers stated that there had not been any changes in the product mix, range, or marketing of TRBs since January 2000, but two producers and eight importers stated that there had been. Among those that did report changes, *** described its own increased efforts to capture a larger share of the market for physically larger, more specialized bearings in medical, construction, and mining equipment. It added that it was producing more custom TRBs for use in automobiles. *** saw increased internet sales.

Four producers and 24 importers did not anticipate any changes in the product mix, range, or marketing of TRBs, while two producers and four importers did, mostly citing trends they had indicated in answer to other questions, such as an increased trend towards more custom bearings. Importer *** indicated that it was considering switching from a ***.

Industry capacity

According to producers, equipment capacity and available labor are the main constraints on TRB production. Data from U.S. producers' questionnaires show high capacity utilization over 2000-05.

Alternative markets

Most producers described shifting sales to alternative country markets as ranging from difficult to impossible.[11] Certification, discrepancies between metric and English measurements, competition from foreign suppliers, and local production all made such shifts difficult. In addition, *** supplied a list of tariffs on U.S. bearings from a variety of large developing countries,[12] and added that markets in Japan and Europe are also difficult to access due to regulations in Japan; exclusive relationships between producers and distributors in Japan; and strong market share dominance of major European producers in Europe. Domestic interested parties asserted that while 90 percent of the certain bearings consumed in Japan come from Japanese-based producers, and 80 percent of the certain bearings consumed in the European Union ("E.U.") come from E.U.-based producers, only 70 percent of certain bearings consumed in the United States come from U.S.-based producers.[13]

Producers were asked if their exports were subject to tariff or non-tariff barriers in other countries. Three said no and three said yes.

Production alternatives

There are few production alternatives for TRBs. Six TRB producers stated that there were no production substitutes for TRBs.

Subject Imports

Based on available information, Chinese producers are likely to respond to changes in demand with large changes in the quantity of shipments of TRBs to the U.S. market. The main contributing factor to the high degree of responsiveness of supply is the high growth in Chinese capacity over 2000-05.

---

[10] Hearing transcript, pp. 81-83 (Griffith).

[11] However, *** reported that distribution chains already exist, so shifting would be "fairly simple."

[12] These reported tariffs on imports of U.S. TRBs included applied tariff rates of 8 percent in China, 2.5 percent in Taiwan, 30 percent in India, 5 percent in Indonesia, 8 percent in Korea, and 10 percent in Thailand.

[13] Hearing transcript, p. 133 (Griffith).

Fourteen Chinese producers/exporters described the product range, product mix, and marketing of TRBs in China as similar to the U.S. market, while two described them as different. *** pointed out that domestic Chinese sales are for TRBs measured in the metric system, and U.S. sales are for TRBs measured in the English system. *** differentiated between the U.S. and Chinese market structure, saying its Chinese bearings are only accepted by more standard end users, leaving the more complex products to manufacturers like ***.

Nine Chinese producers/exporters did not anticipate any changes in terms of product range, product mix, or marketing of TRBs in the Chinese market. However, *** said product range will have to expand following the expansion of the global market.

Chinese producers/exporters described the home market competition as stiffer "day after day" (***) because of overseas manufacturers setting up factories in China due to increasing demand. Eleven firms specified Timken, SKF, and NSK, among others, as the foreign-owned manufacturers now competing in China with Chinese production. When asked if faced with import competition in the Chinese market, eight firms stated yes and eight stated no. The affirmative statements named major global competitors, e.g., Timken, Koyo, NSK, and SKF.

Importers were asked if they anticipated any changes in the availability of subject imports in the future. Twenty-three importers anticipated no changes, but five importers predicted a decrease. *** said that overseas demand for TRBs, from both Europe as well as Asia, would decrease availability of subject TRBs in the United States.

Fifteen Chinese producers/exporters anticipated no changes in the availability of Chinese TRBs in the U.S. market. Two producers, ***, stated that if the antidumping order was revoked, it would be natural to expect the availability to increase. Chinese producers/exporters were asked if they had observed any changes in factors of supply other than raw material costs. Five firms saw changes in other supply factors, pointing to shortages in materials and energy.

Industry capacity

While Chinese capacity utilization was somewhat high over 2000-05, Chinese capacity to produce TRBs grew substantially - more than doubling - over the same period.[14] Nine Chinese producers/exporters cited capacity as a production constraint, five cited finances, four cited energy supply and costs, and three cited raw materials.

Alternative markets

Fourteen importers described shifting sales to alternative country markets as ranging from difficult to impossible.[15] Customer approval, certification, discrepancies between metric and English measurements, U.S. DFAR requirements, and local production all made such shifts difficult. Chinese producers/exporters were also asked to describe how easily they could shift TRB sales between U.S. and alternative markets. Four characterized the shift as impossible. Two stated that the shift would be difficult, with one *** noting that their TRB sales to the United States were produced specially to customer design. The other, ***, emphasized the differences between markets and customers. Three firms said the shift would be easy. *** mentioned the inch TRB as a universal product. The other two, ***, tagged the antidumping order as the only constraint to shifting sales. Another three firms (***) showed a disinterest in shifting sales. Their reason was healthy demand in China and elsewhere, with ***

[14] Domestic interested parties alleged that the Chinese TRB industry consists of more than 100 producers. Domestic interested parties' prehearing brief, pp. 61-62.

[15] Only *** indicated that it could shift sales easily within 12 months.

noting that Chinese TRB producers are unable to meet internal demand. One last firm, ***, sells to each country via its related subsidiary in that country, and therefore would never shift sales.

The CCCME described Chinese producers as producing primarily for the Chinese and other non-U.S. markets. They added that Chinese producers had little incentive to switch such shipments to the U.S. market.[16]

Importers were asked if their exports were subject to tariff or non-tariff barriers in other countries. Seventeen said no and five said yes.

Production alternatives

All 16 responding Chinese producers/exporters of TRBs indicated an inability to transfer equipment and related workers between production of TRBs and other products.

Nonsubject Imports

A slim majority of producers and importers agreed that the availability of imports from nonsubject countries had increased since January 2000. Four producers and 15 importers said that the availability of TRBs from nonsubject countries had increased since 2000, while two producers and eleven importers said that it had not changed. *** described imports of TRBs from countries other than China as increasing over 80 percent from 2000 to 2005, led by German and Japanese TRBs.[17] *** saw increased imports from Eastern European countries, and *** noted that most imports of Chinese TRBs were from producers not subject to the order.

U.S. Demand

Demand Characteristics

One U.S. producer described bearings demand as dependant on the number of "turning wheels" in the economy, i.e., activity in the industrial, automotive, and transportation sectors.[18] TRB demand is primarily driven by the manufacture of machinery and equipment in many industries, including automotive, aerospace, construction, manufacturing, medical (including dental), and mining.[19] Emerson

---

[16] CCCME's prehearing brief, p. 17.

[17] At the hearing, Koyo alleged that the recent "surge" in imported Japanese TRBs was due to Timken importing TRB parts for its TRB production. Hearing transcript, p. 239 (Peacock).

[18] Hearing transcript, p. 79 (Swinehart).

[19] According to purchasers, TRBs are used in a variety of manufactured products, but especially in automotive products such as engines and axles. Twenty-six TRB purchasers indicated that there had been no changes in the end uses for certain bearings, while *** noted that end uses vary by customer requests. Twenty-four purchasers did not anticipate any changes in the end uses of certain bearings, while four did, citing changes in technology and final product lines. *** answered that end users will demand alternative replacements for TRBs.

Six producers and 25 importers had not observed any changes in the end uses of TRBs since 2000. However, *** had seen more demand from the oil field equipment industry, which has been demanding more bearings since 2003. Five producers and 24 importers did not anticipate any changes in end uses for TRBs. Chinese producers/exporters mentioned the following end uses in the Chinese market: automobiles (wheels, transmission), variable speed devices, differential mechanisms, gearboxes, machine tool spindles, construction machines, agricultural machines, locomotive and railway freight cars. These uses were considered the same as in the U.S. or other third countries. No Chinese producer/exporter reported changes or anticipated changes in end uses. One, ***, remarked that because its low quality products can not obtain the quality authentication needed, it is not expecting

(continued...)

(a BB and SPB producer) described material handling, trucks, and trains as high demand sectors now, while Timken saw strong recent growth in trucks as tapering off along with bearing demand from the automotive sector.[20]

Demand for the final products in TRB-using industries is usually a function of overall U.S. economic activity. U.S. GDP grew solidly in 2000, softened during 2001-02, and regained strength in 2003. GDP has grown at over six percent in 2004 and 2005,[21] and the OECD forecasts similar near-term growth.[22] U.S. manufacturing activity began shrinking in August 2000 and did not begin to expand again until February 2002. U.S. manufacturing activity was up and down until May 2003, and has been expanding since then, albeit at a slower pace at the end of 2005 compared to the middle of 2004.[23]

In the automotive sector specifically, the U.S. auto market remains the largest in the world and the BLS expects output to grow over the next 10 years.[24] While Ford and GM cut North American production of automobiles in 2005, overall North American auto market production remained steady due to increased production by foreign-owned automakers.[25] One forecast estimates a 4.9 percent annual growth in the value of the world's automotive industry.[26] While demand for autos may remain strong, one forecast for heavy truck demand predicts little to no growth as worldwide demand for trucks normalizes after several years of strong growth.[27]

In other sectors, industry groups are often touting recent success. The Aerospace Industries Association ("AIA") estimated aerospace industry growth at *** percent between 2004 and 2005, and forecast growth of *** percent for 2006.[28] In construction, the Commercial Investment Trust ("CIT") construction industry survey showed high levels of optimism among contractors and construction equipment distributors.[29]

Purchasers were asked if the certain bearings market is subject to distinctive business cycles. Twenty-five TRB purchasers answered no, and four answered yes. *** said that industrial markets such as mining are cyclical, with the usual cycle lasting three to five years. *** also tied bearings business cycles to downstream demand in automotive and other manufacturing. *** explained that medium and large TRB demand follows demand for construction and off-highway equipment. Among those

---

[19] (...continued)
future changes in end uses.

[20] Hearing transcript, pp. 78-79 (Griffith and Swinehart).

[21] See GDP statistics from the Bureau of Economic Analysis, found at www.bea.gov, retrieved February 28, 2006.

[22] OECD Economic Survey of the United States 2005 from October 27, 2005. See www.oecd.org/documentprint/0,2744,en_2649_34569_35513867_1_1_1_1,00.html (retrieved March 1, 2006). See also the Federal Reserve Bank of Philadelphia's Livingstone Survey (of economic forecasters) December 2005, found at www.phil.frb.org/files/liv/livdec05.pdf, retrieved March 10, 2006.

[23] This analysis is based on using the Institute for Supply Management's PMI Composite Index. See www.ism.ws/ISMReport/OverviewofPMI.cfm and www.research.stlouisfed.org/fred2/data/NAPM.txt retrieved March 10, 2006.

[24] U.S. Department of Labor, Bureau of Labor Statistics, found at www.bls.gov/oco/cg/print/cgs012.htm, retrieved March 1, 2006.

[25] Business Week, "The Good News about America's Auto Industry" found at www.businessweek.com/print/magazine/content/06_07/b3971057.htm?chan=gl, retrieved March 1, 2006.

[26] Data Monitor, "Global Automobiles Industry Profile."

[27] Data Monitor, "Global Medium and Heavy Trucks Industry Profile."

[28] See *** producers' questionnaire, end attachment.

[29] Http://www.cit.com/NR/rdonlyres/emg4zahhl6ibwpyui2ru6rpx6gnn5jggvxvio7tcq3unfgaz43dv34dkdgdtn5uf4jncmmviw3nfe5dekdirttkzz7b/FORECAST2005.pdf. (CIT 2005 Forecast.)

answering no, *** noted that business cycles are generally steady since there are many non-automotive uses for bearings.

Purchasers were also asked if the certain bearings market is subject to distinctive conditions of competition. Twenty-one TRB purchasers answered no, and ten answered yes. Those answering yes cited the antidumping duties, the presence of imported certain bearings, and the current lack of availability of some certain bearings.

Purchasers were further asked if the emergence of new markets for certain bearings had affected the business cycles or conditions of competition for certain bearings. Twenty-five TRB purchasers answered no, and five answered yes, citing increased Asian consumption causing increased lead times and general manufacturing conditions. In addition, *** responded that wind power and gearbox units had increased the demand for TRBs.

Demand Trends

Demand for TRBs strengthened after 2002, and most industry participants expect stable to increasing demand in the near future. However, some large purchasers (e.g., Delphi, Ford, and GM) are currently experiencing financial difficulties, and there are potential problems with specific demand sectors (such as heavy trucks).[30]

Emerson described material handling, trucks, and trains as high demand sectors now, while Timken saw strong recent growth in trucks as tapering off along with bearing demand from the automotive sector.[31] However, Eaton stated that truck demand is cyclical, and predicted that demand would turn down from 2006 to 2007 but recover in 2008.[32] Caterpillar projected more strong demand for its products through 2010, while NSK, NTN, and SKF saw reduced automotive demand balanced by strong industrial demand.[33] Delphi did not expect any changes in its purchasing pattern for TRBs.[34]

Purchasers were asked how demand for their final products incorporating bearings had changed since January 1, 2000. Three TRB purchasers reported that this demand was unchanged while 17 reported that it had increased, sometimes citing increased automobile production. *** said that it had been put on allocation by NTN and Timken. *** cited not only increasing demand but also increased use of bearings per vehicle. *** stated that “issues” in securing sufficient supply began in January 2004. One purchaser reported decreased demand for its final products.

Producers and importers were asked how demand for TRBs had changed since January 2000. Three producers and ten importers reported increased demand, citing the strong automotive, truck, mining, construction, and industrial markets. One producer and nine importers said that demand was unchanged. Finally, one producer and three importers responded that demand had decreased. *** related that while demand for bearings in heavy trucks, light trucks, agriculture, mining, construction, and rail had increased, it was not enough to offset the drop in sales of high volume TRB products.[35] [36]

---

[30] Hearing transcript, p. 59 (Griffith).

[31] Hearing transcript, pp. 78-79 (Griffith and Swinehart).

[32] Hearing transcript, pp. 346-347 (Tefft).

[33] Hearing transcript, pp. 348 (Holder) and 349-350 (Eich, Rouse and Bergqvist).

[34] Hearing transcript, p. 348 (Holder).

[35] Additionally, importer *** cited decreased use of TRBs in conveyors due to the decline of the U.S. auto industry, and *** cited decreased use of TRBs in integrated wheel hub assemblies.

[36] Fourteen Chinese producers/exporters saw an increase in demand since January 1, 2000, and attributed this to China's burgeoning economy (***), growth in the worldwide automobile industry (***), global industries (***), and an improvement in quality (***). One firm, ***, said demand was unchanged.

Producers and importers were further asked if they anticipated any change in demand for TRBs. Three producers and 17 importers said no, while three producers and eight importers answered yes, citing increased demand in China, increased aerospace demand, and the cyclical nature of the TRB market.[37]

Purchasers generally reported increasing demand for TRBs. Seventeen said that demand for TRBs had increased, seven said it was unchanged, and three said it had decreased. Those who saw increased demand cited general economic growth (especially in the mining, industrial, and construction sectors); increased demand from the automotive and truck sectors; and increased demand for off-road and agricultural equipment. *** described domestic demand growth as fluctuating with the automotive market while global growth was driven by development in Eastern Europe and Asia. *** also cited both the resurgent U.S. and Japanese economies as well as the growing economies in China and India. It added that demand for products used in mining, construction, and heavy trucks was at "near record levels," and had resulted in U.S. TRB producers putting purchasers on allocation. However, *** saw demand decreasing as U.S. purchasers moved their production plants overseas, and *** saw high U.S. bearings prices as decreasing demand.

When asked if they anticipated any changes in the demand for TRBs, 20 purchasers said no and eight said yes. Whether they anticipated changes or not, most purchasers who elaborated tied their projections to developments in the automotive, truck, and construction markets. *** anticipated that construction equipment demand would be up 10 percent in 2006 from 2005. *** responded that it anticipated truck industry demand to decrease in 2007-08, but to increase again in 2009-10. *** saw increased vehicle demand in Asia and Eastern Europe driving demand there, while *** predicted that new automotive companies were driving up demand for TRBs used in axles and transmissions. However, *** predicted decreased demand as U.S. manufacturers continue to move their operations overseas.

Substitute Products

Bearings are often designed for a particular and specific use, and often by a particular company to work with its other products as part of a larger machine. Thus, substitution by other products is difficult and could involve a re-design of the final product.

No producers named any substitutes for TRBs. Thirteen importers responded that there were no substitutes for TRBs. Only two importers named any substitutes for TRBs, naming certain bearings (i.e.,

[37] When asked if they expected future changes in demand, six Chinese producers/exporters responded no and ten yes. Most affirmative responses (***) mentioned strong Chinese and world demand with others mentioning specifically the Chinese automobile industry (***), the freight railway industry (***), and an improvement in quality (***).

BBs and SPBs) when used in automotive hub units.[38] Further questionnaire responses on substitutes underscored how few substitute products exist.[39]

Cost Share

When purchasers were asked what percentage of the total cost of their own product was accounted for by the cost of TRBs, they almost always answered less than five percent. Thus, TRBs are not a large part of the final cost of many of the finished goods in which they are used.

SUBSTITUTABILITY ISSUES

Questionnaire respondents generally described U.S. and subject TRBs as performing many of the same roles at close to the same level. However, some questionnaire respondents did highlight differences between the uses of U.S. and subject TRBs.

Lead Times

Four TRB producers and 11 TRB importers reported that a majority of their sales were made to order, while one producer and 12 importers indicated that a majority of their sales were from inventory. Sales from inventory generally had lead times of one to seven days while made-to-order sales had lead times ranging from one to six months.[40]

U.S. Purchasers

The Commission mailed questionnaires to 119 purchasers of certain bearings.[41] It has received responses from 32 purchasers of TRBs, not including two purchasers who responded that they did not

---

[38] All Chinese producers/exporters concurred that there are no substitutes for TRBs, no changes in substitutes since 2000, and no anticipated changes in substitutes in the future.

[39] When asked if changes in the prices of substitutes had affected the prices of TRBs, four producers said no while 12 importers said no and four said yes. When asked if there had been any changes in the number or type of substitutes for TRBs, six producers and 19 importers responded that there had not been, while two importers answered that there had been. When asked if they anticipated any changes in the number or type of substitute products for TRBs, six producers and 24 importers said that they did not.

Eleven purchasers reported that there were no substitutes for TRBs, and *** mentioned that SPBs were being used as substitutes for expensive and scarce TRBs. The rest of the purchasers did not answer the question. When asked if the prices of substitutes had had any effect on the price of TRBs, 20 purchasers answered no. Twenty-five purchasers had not observed any changes in substitutes, but four had, citing new technology. Twenty-seven purchasers did not anticipate any changes in substitutes, but two did, citing potential new technological advances.

[40] Three Chinese producers/exporters reported 10 percent sales from inventory, with lead times of between four days and two months after the order. Ninety to 100 percent of sales for all firms were produced to order with lead times of between three weeks and three months.

[41] Questionnaires for all bearings, including ball bearings, spherical plain bearings, and tapered roller bearings, were mailed at the same time. Some firms were on more than one type of bearings list provided by suppliers.

purchase bearings.[42] Two TRB purchasers purchased only TRBs, while six also purchased BBs, two also purchased SPBs, and 22 also purchased both BBs and SPBs.[43]

When asked to identify their major competitors, TRB purchasers named a variety of firms across an array of manufacturing industries, including autos, automotive parts, agricultural equipment, and heavy duty trucks. Distributors served industrial customers, including OEMs in the automotive, industrial machinery, and primary metals industries, and repair/aftermarket customers in the service center, repair shop, and heavy duty truck industries.

Purchasers were divided among end users, distributors, and combination end users and distributors. Fifteen described themselves as end users, nine as distributors, and seven as both. Fifteen purchasers said that they competed with their suppliers, and eleven said they did not.

Twenty-eight purchasers reported familiarity with U.S. TRBs, 16 with Chinese TRBs, and 26 with nonsubject country TRBs. The majority of purchasers who answered the question reported familiarity with more than one country's TRBs.

Purchasers were asked to report their purchases by year.[44] The largest reporting purchaser's total purchases accounted for less than *** percent of U.S. consumption in 2005. Comparing 2005 to 2002,[45] overall purchases in terms of value increased 76 percent. Purchases of U.S. TRBs rose by 78 percent, fueled by ***, while purchases of nonsubject country TRBs rose by 70 percent, driven by ***. Purchases of Chinese imports were up 37 percent behind higher AUV purchases from ***. U.S. purchases represented 80 percent of all reported TRB purchases in 2005.

Purchasers were also asked if their relative purchases of TRBs from different sources had changed since 2000. Six firms reported a decrease in purchases of U.S. TRBs, due to lack of capacity and decreased demand. Another six purchasers reported an increase, citing sales growth (e.g., in the truck industry) and localization. Two purchasers (***) reported an increase in relative purchases of Chinese TRBs because of availability and price, while one (***) reported a decrease (replacing Chinese TRBs with *** TRBs) because of price. Twenty purchasers reported a relative increase of nonsubject country purchases, citing lower prices and suppliers shifting production locations; only one purchaser reported a decrease.

---

[42] TRB purchasers were asked if related firms imported or produced certain bearings. Sixteen said no related firms, domestic or foreign, imported certain bearings. Nine (***) said related firms did import. (While *** answered that no related firms imported bearings, it listed affiliated companies.) Twenty-four purchasers said no related firms produced bearings, while five (*** indicated they had related firms producing bearings. (While *** did not respond that related firms produce bearings, the Commission received questionnaires from related firms producing bearings.)

[43] Purchasers were asked at several points in the questionnaire if their answers applied to BBs, SPBs, and/or TRBs. If a purchaser did not answer these questions, but did indicate that it had purchased one type of bearing or indicated familiarity with it, that purchaser is counted above as a purchaser of that type of bearing.

[44] One firm, ***, reported its purchases by fiscal year and calendar year. To complete this otherwise incomplete data set, the two were combined.

[45] The year 2002 was chosen as representative of activity since the last recession. Nonetheless, not all purchasers reported for all years, so trends in the purchase data may not be indicative of the overall TRB market.

Factors Affecting Purchasing Decisions

Available data from purchasers indicate that price and quality are the most important factors that influence purchasing decisions for TRBs.[46] Purchasers were asked to list the top three factors that they consider when choosing a supplier of TRBs. Table TRB-II-1 summarizes responses to this question. Purchasers were also asked to describe the importance of various purchasing factors, as summarized in table TRB-II-2. Price was an important factor for most purchasers.[47] A summary of purchaser comparisons of domestic, subject, and nonsubject TRBs are presented in table TRB-II-3.[48]

Table TRB-II-1
Tapered roller bearings: Ranking of purchasing factors by purchasers

Factor	Number of firms reporting		
	Number 1 factor	Number 2 factor	Number 3 factor
Quality	13	10	2
Price/cost	8	12	7
Availability	2	4	8
Customer requirements	2	0	0
Traditional supplier	1	1	4
Delivery	0	2	6
Technical support/service	0	1	0

Note.–Other factors mentioned were capacity, length of pricing agreements, non-compete contracts, regulatory approval, reliability, technology, and terms of sale. These answers were not included above.

Source: Compiled from data submitted in response to Commission questionnaires.

[46] When asked what defines the quality of TRBs, purchasers listed many factors, including meeting specification requirements, life cycle tests, durability test results, consistency, material characteristics, and industry quality standards. In addition, *** reported that TRB quality can be compared on the basis of raceway profile, roller crown, steel quality, and grinding finishes.

[47] When asked how often they purchase the TRBs offered to them at the lowest price, no purchaser said always, 11 said usually, 18 said sometimes, and three said never.

[48] In this table, some purchasers marked one country compared to "all," or something similar, in which case the countries for which purchase data were supplied or familiarity was expressed were used as comparisons.

Table TRB-II-2
Tapered roller bearings: Importance of purchasing factors

Factor	Number of firms reporting		
	Very important	Somewhat important	Not important
Availability	30	1	1
Delivery terms	13	15	4
Delivery time	28	4	0
Discounts	13	13	6
Extension of credit	1	16	15
Price	28	3	1
Minimum quantity requirements	2	23	7
Packaging	8	21	3
Product consistency	29	2	1
Quality meets industry standards	31	1	0
Quality exceeds industry standards	19	11	2
Product range	7	21	4
Reliability of supply	31	0	1
Technical support/service	17	13	2
U.S. transportation costs	7	18	7
Other	0	0	0

Source: Compiled from data submitted in response to Commission questionnaires.

Table TRB-II-3
Tapered roller bearings: Number of purchasers' comparisons of U.S.-produced and imported product

Factor	U.S. vs. China[1]			U.S. vs. nonsubject[1]			China vs. nonsubject[1]		
	S	C	I	S	C	I	S	C	I
Availability	3	5	2	3	23	6	0	5	0
Delivery terms	3	5	2	4	25	4	0	3	2
Delivery time	5	4	1	11	17	5	0	3	2
Discounts	1	6	3	2	26	5	2	3	0
Extension of credit	1	7	2	1	31	0	0	5	0
Lower price[2]	1	1	8	4	19	10	3	2	0
Minimum quantity requirements	1	9	0	3	27	3	0	5	0
Packaging	1	8	1	3	30	0	0	5	0
Product consistency	3	7	0	1	30	2	0	5	0
Quality meets industry standards	3	7	0	2	28	3	0	5	0
Quality exceeds industry standards	5	4	1	2	28	3	0	3	2
Product range	5	4	1	4	22	7	0	3	2
Reliability of supply	3	6	1	3	23	7	0	3	2
Technical support/service	6	3	1	5	25	3	0	3	2
U.S. transportation costs	2	8	0	9	23	1	0	5	0
Other	0	0	0	0	0	0	0	0	0

[1] S = first named source superior, C = products comparable, I = first named source inferior.
[2] A rating of superior means that the price is generally lower. For example, if a firm reports "U.S. superior," it means that the price of the U.S. product is generally lower than the price of the imported product.

Note.– Nonsubject sources include Australia, Brazil, Canada, "Europe," France, Germany, Japan, Mexico, Poland, Romania, Russia, and Thailand. In comparisons with U.S. product, Japan was named by 13 purchasers, Germany by four, and Poland by two. In comparisons with Chinese product, Japan was listed by two purchasers. In addition, *** said that U.S. TRBs have the shortest supply chain and more technical support available, and added that Timken has the broadest range of products. *** stated that it could not compare as Timken is ***.

Source: Compiled from data supplied in response to Commission questionnaires.

When asked how often U.S.-produced TRBs meet minimum quality specifications for their or their customers' uses, 18 purchasers said always, ten said usually, and one said sometimes. When asked how often subject TRBs meet minimum quality specifications, 14 purchasers reported always, 15 reported usually, and two reported sometimes. When asked how often nonsubject country TRBs meet minimum quality specifications, 23 purchasers answered always or usually, and one answered sometimes.

Twenty-two purchasers reported that they required certification or qualification of their suppliers for 80 percent or more of their purchases. Eight purchasers required no certification, but two qualified by mentioning an awareness of ISO certification. The qualification process can involve reviewing supplier quality, supplier capacity, market acceptance, contract terms, technical support, delivery reliability,

financial stability, manufacturing process, and adherence to regulations. Twenty-six purchasers reported that no suppliers had failed to receive approval.[49]

Producers and importers were also asked what percent of their sales are to customers that require certification. Six producers and nine importers responded that 70 percent or more of their sales are to customers that require certification, while nine importers responded that less than 30 percent of their sales were to such customers. Firms named a wide variety of industries when asked what type of customers demand certification. When asked if they had ever been unable to qualify any type of TRB, two importers said yes (with one citing small bearings for axles) while six producers and 22 importers said no.[50]

Purchasers were asked how often their firm makes purchasing decisions on the basis of the producer of the TRBs involved. Five stated always, eleven stated usually, ten stated sometimes, and six stated never. Reasons cited for making decisions based on the TRB producer included reliability, price, quality, and availability.

Purchasers were also asked how often their customers make purchasing decisions on the basis of the producer of the TRBs involved. None reported always, eight reported usually, 13 reported sometimes, and seven reported never. Six purchasers cited brand name recognition as a reason why their customers sometimes made purchasing decisions based on the producer. Other reasons included OEM specification, reputation, and American Bearing Manufacturer Association ("ABMA") standards.

Purchasers were asked how often their firms make purchasing decisions on the basis of the country of origin of the TRBs involved. None said always, one said usually, 14 said sometimes, and 17 said never. Purchasers were also asked how often their customers make purchasing decisions on the basis of the country of origin of the TRBs involved. None said always, none said usually, 12 said sometimes, and 17 said never. Those who answered other than never cited North American Free Trade Agreement ("NAFTA") requirements, quality, logistics, and delivery as reasons.

When asked if they or their customers ever specifically ordered TRBs from one country over others, 18 purchasers reported that they did not.[51] However, 13 purchasers stated that they did, citing quality, loyalty to particular companies, attempts to market certain bearings as U.S.-made, and local content requirements as reasons why. When purchasers were asked if certain grades or types of TRBs are only available from a single country source, 17 said no and 15 said yes, citing specialty and larger TRBs as available only from Timken[52] or from Japan. When asked why they had sometimes purchased more expensive TRBs when less expensive TRBs were available, purchasers emphasized quality, supplier reliability and capacity, lead time, long-term agreements, and the cost to approve new suppliers.

---

[49] *** reported that two firms from India, ***, were not approved because of quality issues. *** added that Chinese firms *** had failed qualification for reasons of quality. *** also disqualified several producers.

[50] Domestic interested parties alleged that major multinational TRB producers, such as FAG, Koyo, NSK, and SKF, have TRB production in China, are already qualified with U.S. OEMs for TRBs from other countries, and are curently trying to qualify their Chinese TRBs with U.S. OEMs. Hearing transcript, pp. 65-66 (Griffith).

[51] Separately, when asked if buying product that was produced in the United States was important to their firm, 27 purchasers answered no and 12 answered yes, citing legal requirements, customer requirements, a preference for local sourcing, and other reasons.

[52] *** said that large, carburized TRBs are usually only available from U.S. producers, while imports are usually through-hardened, leaving such TRBs less impact resistant.

Comparisons of Domestic Products and Subject Imports

Producers, importers, and purchasers were asked to assess how interchangeable TRBs from the United States were with TRBs from subject and nonsubject countries. Their responses are summarized in table TRB-II-4.

Table TRB-II-4
Tapered roller bearings: U.S. producers', importers', and purchasers' perceived degree of interchangeability of product produced in the United States and in other countries

	Number of firms reporting											
	U.S. producers				U.S. importers				U.S. purchasers			
Country comparison	A	F	S	N	A	F	S	N	A	F	S	N
U.S. vs. China	0	3	2	0	4	8	3	2	5	4	4	2
U.S. vs. nonsubject	1	2	2	0	4	4	2	0	4	4	2	2
China vs. nonsubject	0	3	2	0	2	7	1	0	4	1	1	2

Note: A = Always; F = Frequently; S = Sometimes; N = Never.

Source: Compiled from data submitted in response to Commission questionnaires.

In further comments on interchangeability, producer *** remarked that the steel quality in TRBs from China limits their quality. Importer *** stated that custom U.S. TRBs are not automatically interchangeable with standard TRBs from nonsubject sources. *** also stated that Chinese TRBs are more likely to be standard and lower quality TRBs, and thus rarely interchangeable with U.S. TRBs. *** said that for light-load applications, Chinese and U.S. TRBs are interchangeable, but for heavy-load applications, Chinese bearings are not interchangeable. It added that Chinese TRBs tend to be lower priced and widely available. *** explained that all bearings worldwide, when made to the same international dimensions and standards, were physically the same. However, it added that high-volume, less expensive bearings are rarely made in the United States.[53] [54]

While purchasers' responses leaned toward TRBs being always or frequently interchangeable, some purchasers offered additional comments. *** stated that U.S. TRBs were higher quality and somewhat unique compared to other countries' TRBs. *** described problems of quality and consistency in Chinese and Slovakian TRBs as limiting their competition with U.S. TRBs. *** responded that interchangeability among TRBs was limited because the TRBs that it purchases are designed to satisfy individual applications. However, *** indicated that any bearing manufactured to AFBMA standards is interchangeable with other such bearings; however, it continued that added features would limit interchangeability. *** said that it awards its purchases of custom-designed TRBs (for its *** applications) to only one supplier, and that unless that supplier had factories in multiple countries, TRBs

[53] When asked if TRBs sold in the home market are interchangeable (same application) with the TRBs sold in the U.S. market, 11 foreign producers/exporters answered yes. Of the five that said no, one, ***, explained that TRBs sold in China are in metric sizes, whereas TRBs sold in the U.S. are in inch sizes. *** commented that its TRBs sold to the United States are developed according to customer request.

[54] At the hearing, Timken displayed a U.S. and a Chinese TRB that it described as equivalent for most end uses, although it said that the Chinese TRB would be about 50 percent less expensive while the U.S. TRB would last five to ten times as long. It added that this greater longevity was not a quality for which many purchasers with low load applications were willing to spend more. Hearing transcript, pp. 87-88 (Griffith).

from different sources could not be used interchangeably. *** described the *** TRBs it buys as only available from Timken, as Chinese TRBs do not have the necessary regulatory and OEM approval. ***, which marked that U.S. TRBs are sometimes interchangeable with Chinese and nonsubject country TRBs, explained that it buys mostly specialized and non-standard TRBs.

In its posthearing brief, CCCME has alleged that Chinese TRBs in the U.S. market are all made of less expensive, less durable through-hardened steel, while Timken's (and other domestic)[55] TRBs are made of more expensive, more durable, case-carburized steel.[56] It argues that the difference between case-carburized TRBs and through-hardened TRBs means that the TRBs are used by different purchasers and/or in different applications. Domestic interested parties deny these allegations and allege that U.S. and Chinese TRBs compete for the same U.S. customers.[57]

With regard to reported purchases of U.S. and Chinese TRBs, 28 TRB purchasers provided their estimated annual TRB purchases over 2000-2005.[58] Two did not identify the country of origin of their TRBs. Nineteen reported purchasing U.S. TRBs but not Chinese TRBs, and one reported purchasing only nonsubject country TRBs. Six others reported purchasing Chinese TRBs; of these, four purchased U.S. and nonsubject country TRBs as well. Only one (***) of the six purchasers of Chinese TRBs reported producing both subject and nonsubject TRBs; the rest purchased only subject TRBs. The following tabulation summarizes the reported purchases of the six purchasers that reported purchases of Chinese TRBs:

* * * * * * *

Producers and importers were asked to assess how often differences other than price were significant in sales of TRBs from the United States, subject countries, or nonsubject countries. Their answers are summarized in table TRB-II-5.

Table TRB-II-5
Tapered roller bearings: U.S. producers' and importers' perceived importance of factors other than price in sales of product produced in the United States and in other countries

	Number of firms reporting							
	U.S. producers				U.S. importers			
Country comparison	A	F	S	N	A	F	S	N
U.S. vs. China	0	3	2	0	4	6	5	1
U.S. vs. nonsubject	0	3	1	1	2	5	1	1
China vs. nonsubject	0	3	2	0	1	5	2	0

Note: A = Always; F = Frequently; S = Sometimes; N = Never.

Source: Compiled from data submitted in response to Commission questionnaires.

[55] Among U.S. TRB producers, *** TRB production is *** percent case carburized while *** is *** percent case carburized. See, ***.

[56] CCCME posthearing brief, pp. 5-7, especially fn. 17, and p. 14. CCCME said it does not know why this alleged difference has not been an issue in previous investigations and reviews. CCCME posthearing brief, p. 8 fn. 22.

[57] Staff interview with Eric Salonen for domestic interested parties, May 23, 2006. Counsel reported that European TRBs are also through hardened and yet compete with U.S. TRBs.

[58] ***.

In further comments, *** said that the major customers for TRBs are automotive OEMs that require constant and timely deliveries, making shifting to another country's product difficult. *** added that Chinese TRBs are lower quality, have a more limited range, and have longer delivery times than U.S. TRBs when not in inventory. *** explained that Chinese TRBs are viewed as inferior to other TRBs in terms of reliability, bearing life, and tech support, but are widely available. Thus, when other factors are not as important, Chinese TRBs may be selected.

ELASTICITY ESTIMATES

This section discusses elasticity estimates. Parties were encouraged to comment on these estimates.[59] Domestic interested parties agreed with staff's prehearing estimates.[60]

U.S. Supply Elasticity

The domestic supply elasticity for TRBs measures the sensitivity of the quantity supplied by U.S. producers to changes in the U.S. market price of TRBs. The elasticity of domestic supply depends on several factors including the level of excess capacity, the ease with which producers can alter capacity, producers' ability to shift to production of other products, the existence of inventories, and the availability of alternate markets for U.S.-produced TRBs. Analysis of these factors earlier indicates that the U.S. industry is likely to be able to somewhat increase or decrease shipments to the U.S. market; an estimate in the range of 1 to 3 is suggested.

U.S. Demand Elasticity

The U.S. demand elasticity for TRBs measures the sensitivity of the overall quantity demanded to a change in the U.S. market price of TRBs. This estimate depends on factors discussed earlier such as the existence, availability, and commercial viability of substitute products, as well as the component share of the TRBs in the production of any downstream products. TRBs are a small but crucial part of the cost of the finished products they are used in, suggesting a highly inelastic demand; a range of -0.2 to -1 is suggested.

Substitution Elasticity

The elasticity of substitution depends upon the extent of product differentiation between the domestic and imported products.[61] Product differentiation, in turn, depends upon such factors as quality (e.g., chemistry, appearance, etc.) and conditions of sale (availability, sales terms/discounts/promotions, etc.). Most purchasers described U.S. and Chinese TRBs as frequently competing for many TRB end

---

[59] Richard Boltuck and Seth Kaplan, economic consultants for Pacamor Kubar and Timken, submitted an economic simulation modeling the effects of a *** percent increase in shipments of Chinese TRBs to the U.S. market. The simulation uses elasticity estimates from the prehearing report in these reviews. Based on these assumptions, Boltuck and Kaplan conclude that absent the duties, the presence of Chinese TRBs in the U.S. market would have caused declines in U.S. TRB industry revenues such that the industry's return on assets would have fallen short of its annual cost of capital. The CCCME disputed the amount of overlap of competition between U.S. and Chinese TRBs. Domestic interested parties' prehearing brief, exhibit A5, and CCCME's posthearing brief, p. 12.

[60] Domestic interested parties' prehearing brief, p. 2.

[61] The substitution elasticity measures the responsiveness of the relative U.S. consumption levels of the subject imports and the domestic like products to changes in their relative prices. This reflects how easily purchasers switch from the U.S. product to the subject products (or vice versa) when prices change.

uses, although for some end uses, Chinese TRBs may not yet be competitive. Based on available information, the elasticity of substitution between U.S.-produced TRBs and imported TRBs is likely to be in the range of 3 to 5.

PART III: U.S. PRODUCERS' TRADE AND FINANCIAL DATA

Information in this part of the report is based upon the questionnaire responses of seven firms that are believed to account for the great majority of TRB production in the United States.[1] The responding TRB producers represented in this section are: Koyo, Nakanishi, NN, NSK, NTN, SKF, and Timken.

U.S. PRODUCERS' CAPACITY, PRODUCTION, AND CAPACITY UTILIZATION

Data on capacity, production, and capacity utilization for TRBs are presented in table TRB-III-1.[2] Capacity to produce TRBs decreased irregularly by *** percent from 2000 to 2005 while production also fell irregularly by *** percent. Capacity utilization fluctuated between *** and *** percent during the period examined and was *** percent in 2005. Timken accounted for *** of U.S. production of TRBs throughout the period examined.[3] Reported capacity to produce TRBs by Timken varied *** throughout the period.[4] As shown in table TRB-I-8, the firm closed a TRB plant in 2001 (Columbus, OH), sold two other plants in 2002 (Winchester, KY and Ashland, OH) and then acquired the Torrington facilities in 2003.[5] Additional capacity was added at certain of the existing plants throughout the period examined while ***. With respect to ***.

Table TRB-III-1
Tapered roller bearings: U.S. producers' capacity, production, and capacity utilization, by firm, 2000-05

* * * * * * *

*** indicated that they do not anticipate changes in their capacity to produce TRBs in 2006 and 2007 (table TRB-III-2). ***. ***.[6]

---

[1] Questionnaire recipients were instructed in counting "complete" TRBs to "include parts and subassemblies essentially equivalent to a complete bearing, such as sets consisting of cups and cone assemblies or, if cups and cone assemblies are sold separately, the equivalent of sets." ***'s questionnaire response (note to question II-9) indicated that most TRBs are not actually sold or shipped as sets.

[2] As shown in table TRB III-1, the basis on which firms reported capacity ranged from 120 hours per week for *** to 168 hours per week for ***. *** operated 132 hours per week. *** operated 50 to 52 weeks per year.

[3] Timken accounted for *** percent of the value of reported U.S. shipments in 2005 and *** percent of U.S. production.

[4] Timken provided the following comments on its TRB capacity in its questionnaire response: "***." Timken's capacity measured by what it labels the "more accurate method" is presented below:

* * * * * * *

[5] As indicated earlier, Torrington accounted for *** percent of the value of U.S. shipments of TRBs in 1998. Confidential staff report, INV-X-101 (May 8, 2000), p. TRB-I-30.

[6] E-mail from counsel for SKF, May 1, 2006.

Table TRB-III-2
Tapered roller bearings: Anticipated changes in capacity to produce tapered roller bearings in 2006 and 2007

* * * * * * *

U.S. PRODUCERS' DOMESTIC SHIPMENTS, COMPANY TRANSFERS, AND EXPORT SHIPMENTS

The value of U.S. producers' U.S. shipments of TRBs and parts fell by *** percent from 2000 to 2001 and then increased steadily by *** percent from 2001 to 2005 for a period increase of *** percent (table TRB-III-3). The value of exports in 2005 was almost the same as in 2000 after also rising from a period low in 2001. Exports accounted for *** percent of the value of total shipments in 2005 while internal consumption and transfers to related firms accounted for *** percent of the value of total shipments.[7] Shipments of TRB parts to unrelated firms were a relatively minor portion of the value of total TRB shipments. As shown in table TRB-III-3, shipments of parts accounted for *** percent of the value of total shipments in 2005.[8]

Table TRB-III-3
Tapered roller bearings: U.S. producers' shipments, by types, 2000-05

* * * * * * *

The tabulation below lists U.S. shipments of U.S.-produced TRB parts, by firm.

* * * * * * *

The shipment pattern by quantity of "complete" TRBs is similar to that of the value of TRBs and parts in that 2001 was again the period low. However, U.S. shipments of TRBs, in terms of quantity, fell on an overall basis by *** percent from 2000 to 2005.

U.S. PRODUCERS' INVENTORIES

U.S. producers' inventories of TRBs decreased by *** percent from 2000 to 2004 and then rose *** percent from 2004 to 2005 to a level *** percent below that reported for 2000 (table TRB-III-4). Inventories as ratios to production, U.S. shipments, and total shipments remained below *** percent throughout the period examined.

---

[7] ***.

[8] The staff report for the original TRB investigations stated that "the U.S. market for tapered roller bearings is overwhelmingly for the finished product–tapered roller bearing sets, cone assemblies, and cups–used by original equipment manufacturers. The secondary market–the aftermarket for replacement bearings–is also a market for finished bearings, but primarily a market for tapered roller bearing sets. A residual market for finished and unfinished components of bearings also exists, but this market is composed of tapered roller bearing producers who require components to fill short-term material shortages, or who finish the components into complete bearings." *Tapered Roller Bearings and Parts Thereof, and Certain Housings Incorporating Tapered Rollers from Hungary, the People's Republic of China, and Romania, Investigations Nos. 731-TA-341-344, and 345 (Final)*, USITC Publication 1983, June 1987, p. A-25.

Table TRB-III-4
Tapered roller bearings: U.S. producers' end-of-period inventories, 2000-05

* * * * * * *

U.S. PRODUCERS' IMPORTS

Data on U.S. producers' imports of TRBs from all sources are presented in table TRB-III-5. As shown, *** reported U.S. imports of TRBs, however ***.[9] *** stated in its questionnaire response (question II-2) that "items are imported to fill out ***'s broad product lines. Items may be low volume for ***, ... uneconomical to produce, or {in} product ranges that have been discontinued for OEM customers but needed for aftermarket requirements."[10]

Table TRB-III-5
Tapered roller bearings: U.S. producers' (and affiliated firms') subject U.S. imports, U.S. production, and ratio of subject imports to U.S. production, by firm, 2000-05

* * * * * * *

U.S. PRODUCERS' PURCHASES

Data on U.S. producers' purchases of TRBs are presented in table TRB-III-6.

Table TRB-III-6
Tapered roller bearings: U.S. producers' purchases, 2000-05

* * * * * * *

U.S. PRODUCERS' EMPLOYMENT, WAGES, AND PRODUCTIVITY

The average number of production and related workers ("PRWs") producing TRBs and parts decreased by *** percent from 2000 to 2005 with a slight rise reported at the end of that period from 2004 to 2005 (table TRB-III-7). Hours worked and wages paid also fell by *** percent and *** percent, respectively, from 2000 to 2005. Hourly wages increased by $*** per hour from 2000 to 2005, which represented a *** percent increase over the period examined. Productivity rose irregularly from *** bearings per hour in 2000 to *** bearings per hour in 2005 while unit labor costs fluctuated within a $*** range within the 2000-05 period.

Table TRB-III-7
Tapered roller bearings: Average number of production and related workers producing TRBs, hours worked, wages paid to such employees, and hourly wages, productivity, and unit labor costs, 2000-05

* * * * * * *

---

[9] *** but did not provide data as requested per staff e-mail dated February 23, 2006.

[10] ***.

FINANCIAL EXPERIENCE OF U.S. PRODUCERS

Background

Seven producers[11] provided useable financial results on their TRB operations. These firms are believed to account for the majority of the domestic industry's production volume in 2005. Based upon shipment data, sales of parts represented *** percent of sales value in every period. *** reported internal consumption (***), and *** reported transfers to related parties (between *** percent of sales quantities and values in every period). Accordingly, the quantity and value of these affiliated party transactions are presented combined.

One producer (***) began producing and selling TRBs in 2001; the six other producers operated continuously from 2000 through 2005.

U.S. Producers' TRB Operations

Aggregate income-and-loss data for the domestic producers on their operations producing TRBs are presented in table TRB-III-8. These results are ***, which accounted for *** percent of sales quantities and values, and essentially all of the operating income, every period. The financial results of the domestic producers drifted slowly downward from 2000 to 2005 – net sales quantities declined irregularly, and were *** percent less in 2005 than in 2000; net sales values were *** percent higher, after declining in 2001 and then increasing every period; and operating profitability peaked at *** percent of net sales value in 2002 and then declined to the *** percent range in the remaining periods. Even though unit sales values increased by $*** per TRB (*** percent), unit operating costs increased by a bit more $(*** per TRB, or *** percent).[12]

Table TRB-III-8
Tapered roller bearings: Results of operations of U.S. producers, fiscal years 2000-05

* * * * * * *

Increases in unit *** and particularly *** increases in unit *** were only partially offset by decreases in unit *** costs. The domestic industry cited several factors for these changing costs. First, some of the shift in costs from *** was attributable to moving *** costs out of the *** cost pool and into the cost pool for ***. Next, *** did in fact decrease to some extent as a result of ***. Finally, *** were also driven up by ***.[13]

Selected financial data on a company-by-company basis are presented in table TRB-III-9. *** producer, and ***, among the ***, were *** period. On the other hand, *** reported *** period,[14] while *** all alternated between profits and losses, and were generally unprofitable (although they were more profitable in the latter periods). The company-by-company data also highlight the range of TRBs

---

[11] The producers and their fiscal year ends (if other than December 31) are ***.

[12] Given the large differences between the individual producers' unit sales values and unit costs (table TRB-III-9), it may be more appropriate to view percentage changes in average unit values as opposed to the absolute value of the changes.

[13] E-mail from ***, March 17, 2006.

[14] Commission staff asked *** about its *** and, especially in view of *** overall profitability, asked if *** had taken any steps to make its U.S. bearing operations ***. *** replied that a *** of its domestic *** production is ***, which generates low profit margins. *** reported in its Producers' Questionnaire, a decision has been made to ***." *** also noted that the bearings it produces for segments outside of the Commission's review ***. E-mail from ***, May 8, 2006.

produced and sold by the different producers. For example, *** unit sales values were in the $*** per TRB range, *** were in the $*** per TRB range, and *** were in the $*** per TRB range.

Table TRB-III-9
Tapered roller bearings: Selected financial data of U.S. producers on a company-by-company basis, fiscal years 2000-05

* * * * * * *

Given the wide variation in product mix, a variance analysis is not presented.

Capital Expenditures and Research and Development Expenses

Domestic TRB producers' capital expenditures and research and development ("R&D") expenses are presented in table TRB-III-10. While the expenditures were dominated by *** ($*** annual expenditures), *** also had considerable expenditures.

Table TRB-III-10
Tapered roller bearings: U.S. producers' capital expenditures and research and development expenses, fiscal years 2000-05

* * * * * * *

Aggregate R&D expenses were attributable to ***. In some periods, *** R&D expenditures approximated its capital expenditures.

Assets and Return on Investment

Data on domestic TRB producers' assets and their return on investment (defined as operating income divided by total assets) are presented in table TRB-III-11. Total asset values increased slowly but steadily from 2002 on. The return on investment mirrored the domestic TRB producers' operating income margins.

Table TRB-III-11
Tapered roller bearings: U.S. producers' value of assets and return on investment, fiscal years 2000-05

* * * * * * *

PART IV: U.S. IMPORTS AND THE INDUSTRY IN CHINA

U.S. IMPORTS[1]

Import statistics on TRBs are presented in table TRB-IV-1.[2] U.S. imports of subject TRBs, in terms of value, increased by *** percent from 2000 to 2005 while U.S. imports of TRBs from nonsubject sources, in terms of value, more than doubled during the 2000-05 period. Japan was the single largest supplier of imported TRBs to the United States during the latter part of the period examined. As discussed earlier, U.S. imports of TRBs from Japan (and Hungary and Romania) previously had been subject to antidumping duty orders as had certain of the Chinese manufacturers.[3] Canada was another substantial supplier during the current five-year review. Nonsubject U.S. imports from China increased their share of total imports by *** percentage points, in terms of value, from 2000 to 2005 while the share of imports from Japan increased by 10.6 percentage points. The share of subject U.S. imports from China declined (by *** percentage points) as did the share of U.S. imports from Canada (by 11.0 percentage points).

Table TRB-IV-1 also presents quantity data and unit values. As for other types of bearings, quantity figures may not correlate with value data. Counsel for the CCCME indicated in their supplemental response (p. 11) to the Commission's notice of institution that "{t}here are hundreds of types of TRBs with vastly different costs." The CCCME further stated in its prehearing brief that major TRB manufacturers make thousands of different bearings for sale to hundreds of different customers at a range of different prices {and that} subject imports are, for the most part, low-priced/low-end TRBs.[4]

---

[1] Questionnaire recipients were instructed in counting "complete" TRBs to "include parts and subassemblies essentially equivalent to a complete bearing, such as sets consisting of cups and cone assemblies or, if cups and cone assemblies are sold separately, the equivalent of sets." ***'s questionnaire response (note to question II-9) indicated that most TRBs are not actually sold or shipped as sets.

[2] As shown in the notes to table TRB-IV-1, import data were derived from official Commerce statistics that were adjusted to subtract imports from manufacturers/exporters excluded from the antidumping duty order for TRBs from China.

[3] The orders covering TRBs from Hungary, Japan, and Romania were revoked following the Commission's negative determinations in the first five-year reviews in June 2000. The value of imports from Japan represented 23.7 percent of the value of all TRB imports in 1998. China and Romania's shares of subject imports in 1998 were 8.5 percent and 0.7 percent, respectively. Hungary's import share was less than 0.05 percent. *Certain Bearings From China, France, Germany, Hungary, Italy, Japan, Romania, Singapore, Sweden, and the United Kingdom, Investigations Nos. AA1921-143, 731-TA-341, 731-TA-343-345, 731-TA-391-397, and 731-TA-399 (Review),* USITC Publication 3309, June 2000, p. TRB-IV-1.

[4] CCCME's prehearing brief, p. 5.

Table TRB-IV-1
Tapered roller bearings: U.S. imports, by sources, 2000-05

Source	2000	2001	2002	2003	2004	2005
Value *(1,000 dollars)*						
China (subject)[1]	***	***	***	***	***	***
China (nonsubject)[1]	***	***	***	***	***	***
Canada	63,275	45,114	43,817	47,350	54,640	74,744
Germany	17,045	13,093	17,428	19,736	30,666	30,659
Japan[2]	62,349	55,123	74,182	117,568	157,205	198,275
United Kingdom	16,083	11,894	7,984	5,395	5,193	5,836
All others	77,530	69,255	86,039	118,944	145,991	203,038
Subtotal (nonsubject)	***	***	***	***	***	***
Total	0	0	0	0	0	0
Quantity *(1,000 complete bearings or bearing equivalents)*						
China (subject)[1]	***	***	***	***	***	***
China (nonsubject)[1]	***	***	***	***	***	***
Canada	10,767	7,581	4,572	4,622	4,839	5,664
Germany	735	844	1,828	3,840	3,387	2,809
Japan[2]	8,492	8,794	10,682	11,135	12,429	13,724
United Kingdom	1,539	1,913	923	887	698	1,028
All others	21,879	15,196	20,356	23,506	25,211	24,881
Subtotal (nonsubject)	***	***	***	***	***	***
Total	56,865	48,539	57,544	65,563	72,632	88,663
Unit value *(per bearing)*						
China (subject)[1]	$***	$***	$***	$***	$***	$***
China (nonsubject)[1]	***	***	***	***	***	***
Canada	3.38	3.78	5.86	6.11	6.60	7.27
Germany	20.91	15.05	9.19	4.93	8.76	10.71
Japan[2]	5.36	4.40	4.45	4.58	5.19	5.73
United Kingdom	7.83	4.31	6.05	5.15	5.88	4.34
All others	2.52	3.38	2.88	3.32	3.88	5.52
Subtotal (nonsubject)	***	***	***	***	***	***
Average	3.10	3.12	2.96	3.01	3.42	3.75

Table continued on next page.

Table TRB-IV-1--*Continued*
Tapered roller bearings: U.S. imports, by sources, 2000-05

Source	2000	2001	2002	2003	2004	2005
Share of value *(percent)*						
China (subject)[1]	***	***	***	***	***	***
China (nonsubject)[1]	***	***	***	***	***	***
Canada	23.8	20.5	16.7	13.9	12.4	12.8
Germany	6.4	6.0	6.6	5.8	7.0	5.3
Japan[2]	23.4	25.1	28.2	34.4	35.8	34.0
United Kingdom	6.0	5.4	3.0	1.6	1.2	1.0
All others	29.1	31.5	32.7	34.8	33.2	34.8
Subtotal (nonsubject)	***	***	***	***	***	***
Total	0.0	0	0.0	0	0	0.0
Share of quantity *(percent)*						
China (subject)[1]	***	***	***	***	***	***
China (nonsubject)[1]	***	***	***	***	***	***
Canada	18.9	15.6	7.9	7.0	6.7	6.4
Germany	1.3	1.7	3.2	5.9	4.7	3.2
Japan[2]	14.9	18.1	18.6	17.0	17.1	15.5
United Kingdom	2.7	3.9	1.6	1.4	1.0	1.2
All others	38.5	31.3	35.4	35.9	34.7	28.1
Subtotal (nonsubject)	***	***	***	***	***	***
Total	0	0	0	0	0	0

[1] Import values for subject China are adjusted to reflect the revocation of the TRB orders on China as they relate to Shanghai General (order revoked February 1997), Tianshui Hailin (order revoked November 2002), and Wafangdian (order revoked February 2001). Imports for the excluded companies are included under nonsubject China for 2000-05 (for Shanghai General), for 2003-05 (for Tianshui Hailin), and for 2001-05 (for Wafangdian).

[2] A portion of the TRB imports from Japan are by ***. ***'s imports of complete TRBs, in terms of quantity, are as follows (in *1,000 complete bearings or bearing equivalents*): ***. Imports of both complete TRBs and TRB parts, in terms of value, are as follows (in *1,000 dollars*): ***. ***. ***.

Notes continued on next page.

Continuation.

Note.–Data are based on imports entered under HTS items 8482.20.0020, 8482.20.0030, 8482.20.0040, 8482.20.0060, 8482.20.0070, 8482.20.0080, 8482.91.0050, 8482.99.1540, 8482.99.1580, 8482.99.4500, 8483.20.4080, and 8483.20.8080. Official Commerce statistics were, in addition to the above-described subtraction of U.S. imports from excluded firms, also adjusted to subtract out products reported by firms in their questionnaire responses to be entered under the above-listed HTS items but that are not subject to the order (i.e., are products other than TRBs). Firms reported minimal such imports and only very minor adjustments were made to 2002 and 2003 data. Import data are overstated in that HTS items 8483.20.4080 and 8483.20.8080 are believed to include some products other than TRBs. However, import data also could be understated by the volume of any subject product entered under HTS items other than those cited here.

Values are landed, duty-paid, and include complete bearings or bearing equivalents and parts; quantities are derived from the HTS items that are believed to measure only complete bearings or bearing equivalents (i.e., exclude the HTS items for tapered rollers, tapered roller bearing parts, and inner or outer rings or races for TRBs but include the HTS items 8483.20.4080 for flange, take-up, cartridge units incorporating TRBs and 8483.20.8080 for other housed bearings incorporating roller bearings). Since, however, TRBs are usually not sold as sets, the "quantity" figures may be unreliable. Unit values are calculated on the basis of complete bearings (and bearing equivalents) only.

Source: Compiled from official Commerce statistics and responses to Commission questionnaires.

The domestic interested parties point to the increase in nonsubject imports from China from 2003-05 (the period where all three companies were excluded from the order) and argue that "if the order is revoked, one could expected to see similar increases in imports as occurred when the order was revoked as to the three non-subject companies."[5] As discussed earlier, Shanghai General was excluded from the order in February 1997, Tianshui Hailin in November 2002, and Wafangdian in February 2001. Both Tianshui Hailin and Wafangdian responded to the Commission's foreign producer/exporter questionnaire.[6] The following tabulation provides their exports of TRBs to the United States as reported in both their questionnaire responses and in Customs documents:

* * * * * * *

The domestic interested parties also point out that with the revocation of the order of TRBs from Japan in the first five-year reviews that the value of U.S. imports of TRBs from Japan began increasing at a "much faster pace" than imports from China, which remained subject to an antidumping duty order. They assert that "there is every reason to believe the same behavior would result if the order on TRBs from China is revoked, as Chinese-owned producers and all of the major multinational TRBs producers that have established operations in China would be posed to respond to revocation of the order on TRBs from China with increased imports."[7] The CCCME argues in its prehearing brief that the *** is "farfetched" because Chinese producers do not have a customer base *** and therefore, a *** in subject imports is highly unlikely.[8]

[5] Domestic interested parties' posthearing brief, exh. Koplan, p. 2.

[6] Data provided by these firms are not included in table TRB-IV-4.

[7] Domestic interested parties' prehearing brief, pp. 89-90.

[8] CCCME's prehearing brief, p. 25.

U.S. IMPORTERS' INVENTORIES

U.S. importers' inventories of TRBs from China and from all other sources are presented in table TRB-IV-2.

Table TRB-IV-2
Tapered roller bearings: U.S. importers' end-of-period inventories of imports, by sources, 2000-05

Item	2000	2001	2002	2003	2004	2005
Imports from China (subject):[2]						
Inventories (*1,000 complete bearings*)	***	***	***	***	***	***
Ratio to imports (*percent*)	***	***	***	***	***	***
Ratio to U.S. shipments of imports (*percent*)	***	***	***	***	***	***
Imports from China (nonsubject):[2]						
Inventories (*1,000 complete bearings*)	***	***	***	***	***	***
Ratio to imports (*percent*)	***	***	***	***	***	***
Ratio to U.S. shipments of imports (*percent*)	***	***	***	***	***	***
Imports from all other sources:						
Inventories (*1,000 complete bearings*)	5,365	8,074	7,665	19,212	32,894	59,884
Ratio to imports (*percent*)	21.0	42.2	33.8	52.1	74.8	95.0
Ratio to U.S. shipments of imports (*percent*)	29.0	40.9	37.4	89.3	130.6	187.7
Imports from all sources:						
Inventories (*1,000 complete bearings*)	7,566	10,092	10,228	20,908	33,479	61,255
Ratio to imports (*percent*)	21.7	31.0	29.1	45.1	60.9	80.2
Ratio to U.S. shipments of imports (*percent*)	26.5	29.9	31.2	64.7	89.0	136.1

[1] These data are for complete bearings or bearing equivalents and exclude parts other than cups, cone assemblies, and sets of TRBs, which are treated as complete bearings.
[2] Import values for subject China are adjusted to reflect the revocation of the TRB orders on China as they relate to Shanghai General, Tianshui Hailin, and Wafangdian. Imports for Shanghai General, Tianshui Hailin, and Wafangdian are included under nonsubject China.

Source: Compiled from data submitted in response to Commission questionnaires.

THE INDUSTRY IN CHINA

A list of firms that have provided data to the Commission on their TRB manufacturing operations in China, along with selected data on their operations in 2005, is provided in table TRB-IV-3.[9] A number

[9] Seven producers in China–CMC, Luoyang, Wanxiang, Xiangyang, Xibiei, Yantai Timken, and ZCCBC–submitted completed foreign producer/exporter questionnaires during the first five-year reviews. These firms were believed to account for substantially less than half of TRB production in China. Confidential staff report, INV-X-101 (May 8, 2000), p. TRB-IV-6, n. 2. Timken reported that there were approximately *** major bearing producers in China at the time of the first five-year reviews, as well as an undetermined number of smaller producers. Ibid., n. 3.

Table TRB-IV-3
Tapered roller bearings: Subject foreign producers' locations of production facilities and production, total exports, and exports to the United States in 2005

Firm	Basis for reported capacity	Capacity	Production	Total exports	Exports to the United States
		Quantity (*1,000 bearings*)			
Hangzhou//HJH	***	***	***	***	***
Harbin/HRB	***	***	***	***	***
Luoyang/LYC	***	***	***	***	***
Schaeffler Group	***	***	***	***	***
Shanghai SKF/ Beijing Nankou SKF	***	***	***	***	***
Shanghai United/SUBC	***	***	***	***	***
Timken-NSK	***	***	***	***	***
Wanxiang	***	***	***	***	***
Xiangyang/ZXY	***	***	***	***	***
Xibei/NXZ	***	***	***	***	***
Yantai CMC	***	***	***	***	***
Yantai Timken	***	***	***	***	***
Zhejiang/ZCCBC	***	***	***	***	***
Total	--	102,229	86,487	***	***

Note.–Firms that only reported exporting subject TRBs (produced by an unrelated manufacturer) to the United States consisted of the following firm (along with the quantity of bearings exported to the United States in 2005): *** (***).

Source: Compiled from data submitted in response to Commission questionnaires and e-mail, dated April 3, 2006, from counsel for Timken correcting ***.

of the Chinese TRB producers shown in table TRB-IV-3 are interrelated to U.S. and other foreign manufacturers of bearings. Counsel for the CCCME indicated in its response to the Commission's notice of institution that "(s)ince the first sunset review of this order, many non-Chinese companies (including petitioners) have established or expanded existing operations in China to take advantage of the surging domestic demand in China for TRBs, to rationalize their world-wide TRB operations and to establish Asian-based export platforms."[10]

[10] CCCME's supplemental response to the notice of institution, p. 2. Counsel indicated further that "(t}he market for TRBs in China is booming, and Chinese producers are unable to meet this demand. One result is increasing imports of TRBs into China . . . This high demand for TRBs is expected to continue as the Chinese economy continues to grow at an unprecedented rate. It is clear that the Chinese industry is unable to meet this demand

(continued...)

Firms responding to Commission questionnaires include producers that have not exported TRBs to the United States during the period examined. Non-U.S. exporting firms consist of ***. Further, exports to the United States by *** either have been sporadic or ceased (and not exceeded $*** in any one year for *** and $*** for ***). ***, in contrast, reported relatively substantial U.S. exports that averaged about $*** annually from 2000 to *** but did not export subject product to the United States in ***. Exports to the United States of TRBs by *** began in *** and *** began shipping TRBs in *** but not to the United States.[11] As indicated in part I of this chapter, there were two new shippers (Yantai Timken and Peer Bearing-Changshan) during the period of the second five-year review.[12] The value of subject exports to the United States of TRBs by all reporting firms in 2005 accounted for *** percent of U.S. imports of the subject bearings from China (*compare* the value of the export data in table TRB-IV-3 (which is shown in quantity terms) (of $***) to data in table TRB-IV-1).[13] ***, accounted for about *** of reported exports of subject TRBs to the United States during 2000-03, about *** in 2004, and *** in 2005.[14] *** indicated in its foreign producer/exporter questionnaires that the bearings it exports are imported by the following U.S. firms: ***.[15]

CCCME submitted official Chinese export data illustrating the size (by value) of TRB exports from China by company. It asserts that the data show that Timken was, in fact, the largest exporter of Chinese-produced bearings to all sources in 2005, with *** percent of total TRB exports, followed by the nonsubject companies Wafangdian/ZWZ and Shanghai General, representing *** and *** percent of TRB exports, respectively.[16] The CCCME further argues that of the top three Chinese exporters, Wafangdian/ZWZ is the only company without U.S. roots[17] and, as illustrated by the data, exports little to the United States despite not being subject to antidumping duties. CCCME asserts that "absent special circumstances (such as Shanghai General's U.S. roots), the U.S. market is *not* as attractive a market to

---

[10] (...continued)
simply from internal production . . . Another result is that non-Chinese owned TRB producers, including Timken, are rushing to enter the Chinese market, setting up new manufacturing operations or further expanding existing ones." Ibid.,
p. 7.

[11] *See* questionnaire responses of the cited firms.

[12] Commerce applied the rate of 12.25 percent to Peer Bearing-Changshan for June 1, 2000 to January 1, 2001 and the rate of 0.00 percent to Yantai Timken for June 1, 2000 to November 30, 2000. 67 FR 10665, March 8, 2002. As shown above, Yantai Timken provided a response to the foreign producer/exporter questionnaire while Peer Bearing-Changshan did not respond.

[13] Foreign producers/exporters shown in Customs documents as exporting TRBs to the United States that did not respond to Commission questionnaires consist of: China National Electronics, China National Arts and Crafts, China National Metals & Minerals, and the Liaoning MEC Group. The CCCME, however, believes that not all of these firms actually produce (or export) TRBs. E-mail from counsel to the CCCME, March 10, 2006. Additional non-responding firms that are related to interested parties include: NTN (China) Investment Corp. (Letter from counsel for NTN providing contact information, December 15, 2005).

[14] The value of TRB imports shown in Customs documents as having been exported to the United States from January 2000 to August 2005 by "***" and *** combined is somewhat higher than that reported by *** in its questionnaire response.

[15] ***'s foreign producer/exporter questionnaire response, question I-3. Of these firms, *** responded to the importers' questionnaire. ***.

[16] CCCME's posthearing brief, p. 9 and exh. 2. The official Chinese export data (which is in value) *** that provided by Timken-NSK and Yantai Timken in their questionnaire responses. When measured by quantity, however, others firms (notably ***) also exported a substantial portion of their total production in 2005 (table TRB-IV-3). ***.

[17] Shanghai General is owned by the U.S. company, General Bearing Corp. CCCME's posthearing brief, p. 9.

Chinese producers as either China's home market or third country markets."[18] Furthermore, CCCME maintains that of its ten subject and two nonsubject member companies (which includes ***), the significant increase in its TRB production was not used to export to the United States.[19] However, as shown in the earlier-presented tabulation of TRB exports to the United States by nonsubject Chinese manufacturers, there is a *** between the questionnaire data provided by *** (which show a *** increase in exports to the United States) and Customs documents for *** (which show a *** rise).

Changes in the character of their operations or organization relating to the production of TRBs since 2000 that were provided by Chinese firms in their responses to the foreign producer/exporter questionnaire are shown below:

Firm	Response
***	***.
Note.–The following firms reported that there had been no changes in the character of their operations or organization relating to the product of TRBs in China since 2000: ***. The domestic interested parties, in contrast, assert that a number of multinational producers have announced capacity expansions or other increased activities in China. *See* pp. 77-79 of the domestic interested parties' prehearing brief for a discussion of future activities by Koyo, Schaeffler (INA/FAG), NTN, and NSK. At least a portion of these planned investments appear to apply to TRBs.	

Data on the Chinese TRB industry, reported in response to the Commission's questionnaires, are provided in table TRB-IV-4. China's reported capacity to produce TRBs increased sharply from 53.9 million bearings in 2000 to 102.2 million bearings in 2005, or by 89.8 percent. Production, however, rose at a somewhat higher rate than capacity, and capacity utilization, as a result, increased from 75.1 percent in 2000 to 84.6 percent in 2005. The period high for capacity utilization was 86.8 percent in 2003.[20] China's home market for TRBs was substantial and accounted for more than 50 percent of total shipments throughout each of the years reviewed.[21] The shares of shipments by destination fluctuated within relatively narrow ranges except towards the end of the period when the shares of shipments of TRBs to the home market and to Asia increased while shipments to the United States fell.[22] As was the

[18] CCCME's posthearing brief, pp. 9-10.

[19] CCCME's posthearing brief, p. 9.

[20] The domestic interested parties assert that excess capacity exists in China as producers who operate either 40, 48, or 52 hours per week ***. Domestic interested parties' prehearing brief, p. 69. The basis for reported capacity, by firm, is presented in table TRB-IV-3.

[21] The CCCME argues in its prehearing brief that the share of Chinese shipments to the home market are, in fact, underestimated when Yantai Timken is included in the calculation. According to the CCCME, Yantai Timken primarily uses its China plant "as a platform to supply Europe and Asia." CCCME's prehearing brief, p. 6. *See* table TRB-IV-3 for data on TRB production and total exports by firm in 2005.

[22] The period high for the share of home market shipments was 2003, although the volume shipped to the home market continued to rise from 2003 to 2005.

Table TRB-IV-4
Tapered roller bearings: Data for subject producers in China,[1] 2000-05

Item	2000	2001	2002	2003	2004	2005
	Quantity *(1,000 complete bearings or bearing equivalents)*					
Capacity	53,852	56,938	63,627	68,643	86,297	102,229
Production	40,462	44,097	54,968	59,573	73,404	86,487
End-of-period inventories	9,686	9,934	10,869	10,294	9,213	9,761
Shipments:						
Internal consumption/transfers	***	***	***	***	***	***
Home market	24,008	23,731	30,975	38,528	41,261	53,841
Exports to:						
United States	***	***	***	***	***	***
European Union	***	***	***	***	***	***
Asia	***	***	***	***	***	***
All other markets	***	***	***	***	***	***
Total exports	***	***	***	***	***	***
Total shipments	40,874	43,848	54,034	60,146	74,484	85,928
	Ratios and shares (*percent*)					
Capacity utilization	75.1	77.4	86.4	86.8	85.1	84.6
Inventories/production	23.9	22.5	19.8	17.3	12.6	11.3
Inventories/shipments	23.7	22.7	20.1	17.1	12.4	11.4
Share of total shipments:						
Internal consumption/transfers	***	***	***	***	***	***
Home market	58.7	54.1	57.3	64.1	55.4	62.7
Exports to:						
United States	***	***	***	***	***	***
European Union	***	***	***	***	***	***
Asia	***	***	***	***	***	***
All other markets	***	***	***	***	***	***
Total exports	***	***	***	***	***	***

Table continued on the next page.

Table TRB-IV-4--*Continued*
Tapered roller bearings: Data for subject producers in China,[1] 2000-05

Item	2000	2001	2002	2003	2004	2005
			Value *($1,000)*			
Shipments:						
Home market	111,576	111,269	130,715	159,743	136,625	161,313
Exports to:						
United States	***	***	***	***	***	***
European Union	***	***	***	***	***	***
Asia	***	***	***	***	***	***
All other markets	***	***	***	***	***	***
Total exports	18,925	25,298	31,018	37,803	64,579	88,759
Total shipments	130,501	136,567	161,733	197,546	201,204	250,072
			Unit value *(per bearing)*			
Shipments:						
Home market	$4.65	$4.69	$4.22	$4.15	$3.31	$3.00
Exports to:						
United States	***	***	***	***	***	***
European Union	***	***	***	***	***	***
Asia	***	***	***	***	***	***
All other markets	***	***	***	***	***	***
Total exports	***	***	***	***	***	***
Total shipments	3.19	3.12	2.99	3.29	2.70	2.91

[1] These data are for complete bearings and exclude parts other than cups, cone assemblies, and sets of TRBs, which are treated as complete bearings.

Source: Compiled from data submitted in response to Commission questionnaires.

case in the first five-year reviews, Chinese producers noted in their questionnaire responses that changes in the development of the Chinese economy and demand for automobiles in their home market have created an increased demand for bearings in China.[23] However, the domestic interested parties assert in their prehearing brief that the reported production data substantially understates the actual production of TRBs in China and the responding subject producers only represent a fraction of all Chinese TRB

[23] As cited in the domestic interested parties' prehearing brief, Peer Bearing's Changshan TRB plant's production capacity reportedly has been expanded rapidly in the last few years to meet strong consumer demand. Domestic interested parties' prehearing brief, p. 63.

producers.[24] The CCCME counters in its posthearing brief that there are 63 TRB producers in China and 51 Chinese exporters of TRBs, but not all exporters sell to the United States.[25]

Table TRB-IV-4 also presents unit values (or AUVs) calculated from questionnaire data. As shown, the unit values of home market shipments of TRBs are *** higher than those reported for exported TRBs, with the unit values of exports to the United States consistently the lowest for each destination throughout the period examined. The CCCME states in its posthearing brief that Chinese subject exports to the United States have lower AUVs as compared with the Chinese and European markets due to its different product mixes. Specifically, CCCME maintains that since its subject exports to the United States are "largely concentrated in the low-end of the market" and its sales in Chinese and European markets face less "purchaser bias" compared to the United States, its U.S. AUVs tend to be lower while its Chinese and European AUVs tend to be higher.[26]

In regards to product shifting, domestic interested parties assert that the potential for product shifting is limited since TRBs are manufactured on dedicated machinery, which constrains production switching without reconfiguring production lines.[27] There are no known antidumping or countervailing duty orders covering imports of Chinese TRBs into third countries.

THE GLOBAL TRB MARKET

Global demand for all bearings is forecasted to grow by 5.7 percent annually through 2007 to $36 billion, spurred by rising output of bearing-consuming products, especially in developing regions. North America and Western Europe, however, will remain the world's leading markets for these products. The United States and Japan are the world's largest producing countries, with over $10 billion in bearing shipments.[28] TRBs are estimated to account for approximately 20 percent of the world bearing market, following 15 years of sales declines.[29] Timken claims to be the world's largest TRB producer.[30] It reports numerous countries maintain high tariffs and other barriers on imports of bearings.[31] According to parties in support of revocation, there are no major barriers to the importation of TRBs into countries other than the United States.[32]

The Chinese market for TRBs is booming as the economy expands and Chinese producers are unable to meet demand, according to parties supporting revocation. As a result, Chinese TRB imports are

---

[24] Domestic parties maintain that the 2004 production quantities and values reported by TRB producers in China to the Commission only represent approximately half of the production data presented by the 2006 Chinese Bearing Industry Development Research Report. In addition, the domestic interested parties estimate that there are *** TRB producers in China. Domestic interested parties' prehearing brief, pp. 57-62.

[25] CCCME's posthearing brief, exh. 7.

[26] CCCME's posthearing brief, pp. 15-16.

[27] Domestic interested parties' prehearing brief, p. 95.

[28] World Bearings, study brochure, Freedonia Group, June 2003, found at http://www.freedoniagroup.com, retrieved on March 13, 2006. Other estimates put the global market at $21.0 billion in 2002, with 50 percent accounted for by ball bearings and 18 percent by tapered roller bearings. Business Plan, ISO/TC 4 (Rolling bearings), Sept. 9, 2004, provided in SKF's posthearing brief, exh. 5, pp. 1, 4.

[29] SKF's Annual Report 2005, p. 11, found at http://investors.skf.com/files/annualreport2005_en.pdf, retrieved on March 16, 2006.

[30] Timken's 10-K, Mar. 13, 2006, found at http://ccbn.tenkwizard.com, retrieved on March 21, 2006.

[31] Domestic interested parties' prehearing brief, exh. A3.

[32] SKF's response to the notice of institution, July 21, 2005, p. 8, and NSK's response to the notice of institution, July 21, 2005, p. 4.

increasing. Moreover, foreign manufacturers, such as Timken, have established or expanded manufacturing facilities in China and are major and growing TRB exporters.[33]

The global market for TRBs is believed to exceed $2.3 billion, as reflected in reported trade data during 2000-04.[34] The United States was the world's third largest exporter of TRBs, accounting for 13 percent ($315 million) of reported exports. Germany, Japan, and France accounted for another 43 percent ($1.0 billion) of reported total TRB exports in 2004 (table TRB-IV-5). TRB exports from China, the fifth largest reported export source, exhibited annual growth of 42 percent during 2000-04, totaling nearly $108 million in 2004. The United States ranked second in the world in TRB import value in 2004, with 11 percent ($223.9 million). Germany and France rounded out the leading import markets reported in 2004, accounting for 23 percent ($480.1 million) of reported TRB imports (table TRB-IV-6). The United States was China's leading TRB import source (by value) during 2004-05 and by far its largest export market during the entire period of review (tables TRB-IV-7 and TRB-IV-8).[35]

Table TRB-IV-5
Tapered roller bearings: Global exports, by reporting country, 2000-04

Reporting country	2000	2001	2002	2003	2004
	Value ($1,000)				
Germany	279,513	242,335	238,248	287,725	365,944
Japan	296,725	260,363	256,829	293,660	335,156
USA	252,699	210,052	246,158	272,831	315,041
France	122,848	170,511	196,680	243,171	305,603
China	26,513	34,542	42,788	58,528	107,971
Romania	17,396	31,556	38,391	42,595	53,779
Brazil	24,726	22,458	27,625	35,504	50,407
United Kingdom	105,620	73,292	54,770	41,688	36,955
Canada	38,409	30,810	33,665	36,006	36,935
Singapore	24,263	21,670	21,690	28,294	35,591
All other	369,586	366,392	397,553	523,554	716,501
Reporting total	1,558,298	1,463,981	1,554,397	1,863,556	2,359,883

Note.–These data represent exports for HTS heading 8482.20 (tapered roller bearings, including cone and tapered roller assemblies), which are not directly comparable to the TRB imports subject to the scope of this review.

Source: Data from Eurostat, U.S. Bureau of the Census, Brazil's Secretariat of Foreign Trade, China Customs, Statistics Canada, Singapore Customs, Japan Customs, Romanian National Institute of Statistics, and the United Nations, as presented by Global Trade Atlas.

[33] CCCME's response to the notice of institution, Aug. 8, 2005, pp. 7-10.

[34] Reporting countries collect import/export data for TRBs using different quantity measures (tons vs. units), precluding the development of comparable quantity and unit value data.

[35] China's export data are presented for a longer reporting period than comparable global data, reflecting the latest official statistics provided.

Table TRB-IV-6
Tapered roller bearings: Global imports, by reporting country, 2000-04

Reporting country	2000	2001	2002	2003	2004
	Value ($1,000)				
Germany	194,568	231,188	232,583	270,369	291,602
USA	161,843	140,568	153,198	177,746	223,896
France	83,561	102,031	112,312	150,215	189,289
Italy	85,304	94,355	100,575	129,685	153,256
Belgium	59,692	59,126	63,536	75,433	98,382
Sweden	63,560	51,062	51,218	61,373	86,403
Singapore	41,056	31,959	30,372	58,322	82,574
Canada	98,089	64,821	67,790	74,865	78,264
United Kingdom	76,417	54,066	53,584	50,709	62,767
Brazil	42,658	41,302	36,161	42,849	56,055
All other	547,473	513,455	534,839	659,894	781,511
Reporting total	1,454,221	1,383,933	1,436,168	1,751,460	2,103,999

Note.–These data represent imports for HTS heading 8482.20 (tapered roller bearings, including cone and tapered roller assemblies), which are not directly comparable to the TRB imports subject to the scope of this review.

Source: Data from Eurostat, U.S. Bureau of the Census, Brazil's Secretariat of Foreign Trade, China Customs, Statistics Canada, Singapore Customs, Japan Customs, Korea, Australian Bureau of Statistics, and the United Nations, as presented by Global Trade Atlas.

Table TRB-IV-7
Tapered roller bearings: Chinese imports, by country, 2000-05

Partner country	2000	2001	2002	2003	2004	2005
	Quantity (1,000 units)					
United States	226	78	176	435	277	316
Germany	431	339	188	543	355	603
Japan	7,761	1,626	1,260	452	1,012	1,066
Korea	12	2	39	6	415	1,029
Sweden	11	2	3	17	27	24
Romania	(1)	(1)	0	(1)	1	3
United Kingdom	2	(1)	(1)	1	(1)	136
Italy	1	8	18	9	22	39
Hungary	(1)	(1)	15	24	45	38
South Africa	0	(1)	(1)	(1)	(1)	2
All other	89	65	11	116	380	342
World	8,641	2,157	1,920	1,641	2,545	3,476
	Value ($1,000)					
United States	2,532	2,109	3,368	7,604	15,461	17,650
Germany	2,736	3,311	3,555	8,196	10,265	17,580
Japan	1,082	3,163	4,887	4,598	5,950	9,527
Korea South	33	16	110	62	2,186	5,622
Sweden	81	293	492	801	1,324	5,015
Romania	(2)	14	0	506	2,095	4,701
United Kingdom	658	19	14	74	31	1,224
Italy	152	151	121	315	1,856	1,171
Hungary	2	5	367	679	1,414	842
South Africa	0	3	140	5	83	609
All other	984	491	1,079	1,554	2,278	2,482
World	8,260	9,575	14,133	24,394	42,943	66,423

[1] Less than 500 units.
[2] Less than $500.

Note.–These data represent imports for HTS heading 8482.20 (tapered roller bearings, including cone and tapered roller assemblies), which are not directly comparable to the TRB imports subject to the scope of this review.

Source: China Customs, as presented by Global Trade Atlas.

Table TRB-IV-8
Tapered roller bearings: Chinese exports, by partner country, 2000-05

Partner country	2000	2001	2002	2003	2004	2005
	Quantity (1,000 units)					
United States	20,842	21,232	27,167	23,098	34,125	46,081
France	237	193	365	1,215	3,761	5,551
Singapore	608	731	346	715	1,406	3,724
Germany	3,463	5,999	5,254	4,856	6,974	9,393
United Arab Emirates	1,329	906	1,735	5,140	6,416	7,705
Brazil	97	584	962	2,472	5,308	5,136
Japan	97	108	31	51	1,545	4,358
Poland	0	17	487	1,301	1,402	2,832
Italy	299	583	933	1,172	1,307	2,287
South Africa	141	283	698	856	1,183	1,949
All other	5,356	5,707	10,026	13,567	21,897	29,925
World	32,469	36,343	48,004	54,443	85,323	118,942
	Value ($1,000)					
United States	12,073	11,311	14,550	13,168	24,809	40,429
France	286	673	884	8,757	22,669	27,935
Singapore	637	1,537	691	1,906	3,906	15,948
Germany	6,635	11,211	8,526	8,125	11,932	14,451
United Arab Emirates	1,123	766	1,395	3,924	6,158	10,013
Brazil	188	909	1,242	2,428	5,556	9,870
Japan	45	186	31	35	1,884	7,103
Poland	0	22	374	1,316	1,774	4,624
Italy	333	683	1,238	1,384	1,726	4,490
South Africa	314	303	684	871	1,646	2,749
All other	4,879	6,941	13,173	16,614	25,911	44,779
World	26,513	34,542	42,788	58,528	107,971	182,391

Note.–These data represent imports for HTS heading 8482.20 (tapered roller bearings, including cone and tapered roller assemblies), which are not directly comparable to the TRB imports subject to the scope of this review.

Source: China Customs, as presented by Global Trade Atlas.

.

PART V: PRICING AND RELATED INFORMATION

FACTORS AFFECTING PRICES

Raw Material Costs

The principal raw material in TRBs is bearing quality steel bar. Using merchant steel bar as a proxy for bearing quality steel,[1] the price of merchant steel bar rose from $*** per ton in January 2000 to $*** per ton in December 2005. As recently as September 2003, the price for merchant steel bar was still $*** per ton, with the increase having come since then.

Producers and importers were asked to what extent changes in the prices of raw material costs had affected the prices for their sales of TRBs. Five producers and 18 importers described increased raw material prices, while one producer and three importers reported no changes in raw material costs. Most suppliers who reported an increase in raw material costs indicated that the increase had come since 2002 or 2003, with raw material costs having been stable before then. These increased costs (steel, and to a lesser extent energy) were also described as being a worldwide phenomenon, with similar worldwide effects. Several suppliers commented that raw material costs had stabilized in the last year, and that they expected such costs to remain stable in the future.[2]

Moreover, those producers and importers who did report increased raw material prices reported a variety of effects. Some reported that they could pass these costs through to customers (either in the form of surcharges or raised prices), while others stated that they could not, especially with larger OEM customers. For example, *** indicated that it had assessed a surcharge to cover raw material costs. That surcharge had been mostly accepted by its industrial consumers, but some automotive purchasers had threatened to move production offshore if forced to purchase at higher prices. It added that it was currently trying to convert its surcharges to higher list prices.

More information on the effects of raw material costs on the U.S. industry is available in part III of this chapter.

Transportation Costs to the U.S. Market

Transportation costs for TRBs from China to the United States (excluding U.S. inland costs) are estimated to be approximately 5.0 percent of the total cost for TRBs.[3]

---

[1] Pricing data for bearing quality steel bar are not available. Merchant steel bar is manufactured on equipment similar to that used to produce bearing quality steel bar, albeit with different chemistry. Data are from ***.

[2] Rising raw materials costs since January 1, 2000 affected 12 Chinese producers/exporters, with nine noticing the rise in 2004 and 2005. Five identified rising steel prices as the reason. *** estimated the raw materials' price increase was between 5-10 percent per year in 2004 and 2005.

[3] These estimates are derived from official Commerce statistics and represent the transportation and other charges on imports valued on a c.i.f. basis, as compared with customs value.

U.S. Inland Transportation Costs

Producers and importers[4] generally estimated that transportation costs were one to five percent of the total delivered cost of their TRBs. (However, importers had more estimates of 5 percent than producers.) Four producers and 15 importers said that their firm arranges transportation, while no producers and eight importers said that their purchasers do.[5] Both producers and importers generally shipped a majority of their shipments at least 100 miles within the United States.

U.S. Price Levels

According to data from the BLS, the producer price index for intermediate goods rose 26.1 percent from January-March 2000 to October-December 2005 while the producer price index for iron and steel products rose 44.9 percent over the same period.[6]

Exchange Rates

The nominal value of the Chinese yuan against the U.S. dollar from January 2000-December 2005 is presented in appendix F, figure F-1. The value of the Chinese yuan is fixed, and so did not fluctuate except for a small appreciation in 2005 when the Chinese government revalued the yuan. The real exchange rate is not included because the necessary producer price index is not available for China.

PRICING PRACTICES

Pricing Methods

TRB suppliers use price lists, transaction-by-transaction negotiations, and long-term contracts when negotiating prices for TRBs. Many suppliers reported that prices for OEMs are negotiated individually while distributors purchase off price lists.[7] Price lists may also be used as a starting point for negotiations. For larger customers, suppliers reported using long-term contracts for the particular programs for which the purchaser is purchasing TRBs.[8] For larger OEMs, prices will usually be negotiated lower than those for distributors.[9]

Suppliers described a wide variety of sales terms for their sales of TRBs. One producer and four importers reported that over 50 percent of their TRB sales were under long-term (more than one year)

---

[4] The following firms submitted both an importer's and a producer's questionnaire: ***. For the purposes of this section, (except as regards presentation of pricing data), the responses of these firms have been counted both as a producer and as an importer. In almost all cases, the answers to the producer's and importer's questionnaires were substantially similar or identical as the firm referred to the other questionnaire.

[5] In addition, *** reported that it arranges transportation for its distributors while its OEM purchasers arrange transportation for themselves. *** reported that both it and its purchasers may arrange transportation.

[6] The producer price indexes for each quarter were constructed by taking an average of the seasonally adjusted price index for each month of the quarter.

[7] Many examples of price lists were provided to the Commission as part of producer and importer questionnaire responses. Most were quite extensive with a long list of a variety of bearings products.

[8] Few suppliers reported regularly using discounts, although quantity, early payment, and distributor loyalty discounts were noted. For longer term contracts, discounts are more likely built in to the negotiated price. *** remarked that customers may seek discounts even after sales have been negotiated under contract.

[9] Hearing transcript, pp. 120 (Swinehart) and 123-124 (Griffith).

contracts,[10] two producers and six importers reported that over 50 percent of their TRB sales were under short-term (one year or less) contracts,[11] one producer and 13 importers reported over 50 percent of their TRB sales were spot sales, and one producer (***) reported that its sales were more equally divided between long-term contracts, short-term contracts, and spot sales.[12]

When asked how frequently they purchase certain bearings, 15 TRB purchasers answered daily, 12 answered weekly, and four answered monthly. Thirty-one TRB purchasers did not expect this pattern to change in the next two years.

TRB purchasers typically contact between one and five suppliers before purchasing. When asked if purchases typically involve negotiations (and if so, if these negotiations involve quoting competing prices), 26 TRB purchasers responded that their purchases did typically involve negotiations, while six said that they did not. However, few if any purchasers reported discussing competitors' prices. Negotiations typically involved price, design, quantity ordered, long-term agreements, and/or materials availability, among other factors.

Twenty-three TRB purchasers reported that they did not vary their purchases of TRBs from a particular supplier based on the price offered by that supplier, but nine did. However, one of those who did, ***, explained that it would prefer a long-term (approximately three year) supply agreement with a close working relationship.

When asked if they had changed suppliers in the last five years, 19 TRB purchasers answered no while 13 answered yes. Those who had changed suppliers cited availability (supplier capacity) and price, but several, including ***, stated that changing suppliers is an infrequent occurrence for them because of qualification issues. *** explained that it had become an authorized distributor for ***.

Purchasers were asked if they were aware of any new suppliers in the market in the last five years. Twenty-five TRB purchasers said no, but seven said yes, citing various suppliers from North America, Europe, China (especially Peer), and Japan. When asked if they anticipated any new suppliers in the future, 21 TRB purchasers said no and ten said yes, often citing Chinese and Indian suppliers. Two TRB purchasers also mentioned noting or anticipating new suppliers due to the current shortage of TRBs.

Purchasers were asked to identify price leaders and describe how these leaders led. Twenty-one TRB purchasers named Timken as a price leader, seven named SKF, and six named NTN, with NSK and INA also receiving multiple mentions. Purchasers reported that leaders led by providing a quality product and having a large market share. According to some purchasers, these qualities have allowed the price leaders to increase prices annually.[13]

Producers and importers were also asked if any individual firms had influenced the price of TRBs in the U.S. market. Four producers and nine importers said yes, generally citing Chinese imports and the

---

[10] Long-term contracts were generally 1-5 years, often did not allow price renegotiation, did not always fix quantity, and typically did not have a meet-or-release provision. However, *** reported that customers may be released or try to renegotiate price.

[11] Short-term contracts were generally 6-12 months, generally did not allow price renegotiation, fixed either price or both price and quantity, and usually did not have a meet-or-release provision.

[12] Almost all 2005 TRB sales by Chinese producers/exporters were either short-term contract or spot. Six firms reported 60 percent or greater of sales were under short-term contracts, and three firms reported 100 percent of sales were spot. In contrast, the largest share of sales reported by long-term contract was eight percent. Short-term contracts ranged between two to six months. Five firms fixed price and quantity in their contracts; one did not. Five firms included a meet-or-release provision in their contracts; one did not.

[13] *** reported that *** threatened to stop shipping product in order to obtain price increases. When those firms succeeded in obtaining price increases, their competitors followed with price increases.

large multinational bearings producers, with importers being more likely than producers to cite Timken. However, two producers and 13 importers answered that no firm had influenced price.[14]

When asked how frequently the price of certain bearings changes, 23 TRB purchasers responded with answers between six months and one year. Other purchasers reported longer periods when under contracts. Some purchasers reported that price changes depend on energy and raw material costs with *** reporting that such surcharges can change monthly. *** reported that price changes are coming more frequently now than in 2003 and before. *** similarly reported that prices were typically held for the life of a program, but have changed significantly in recent years due to higher steel pricing.

Price Trends

Purchasers were asked if there had been a change in the price of TRBs since January 1, 2000, and if so, how the price of U.S.-produced TRBs has changed relative to imported TRBs. Fourteen TRB purchasers said that prices of U.S. and imported TRBs had changed by the same amount, with one citing "steel economics." Nine said that the prices of U.S. TRBs had changed relative to the price of Chinese TRBs. Eight purchasers said that the prices of U.S. TRBs had changed relative to the price of TRBs from nonsubject countries. In response to a separate question, 13 purchasers said that U.S. TRB prices were higher than Chinese and nonsubject country TRB prices, and one said that U.S. TRB prices were lower than nonsubject country TRB prices. Two purchasers said that the price of TRBs had not changed.

Producers and importers were asked to compare the prices of TRBs in the U.S. and non-U.S. markets. While most answered that such comparisons were difficult, those that could compare generally described U.S. prices as higher, although importers *** described international prices as the same as U.S. prices. *** added an example of one TRB where the Chinese price was less than half the U.S. price, and *** gave an example of a U.S. TRB costing over 20 percent more than a Chinese TRB.[15] Importer *** said that international prices were lower than U.S. prices.

PRICE DATA

The Commission requested U.S. producers and importers of TRBs to provide quarterly data for the total quantity and value of TRBs that were shipped to unrelated customers in the U.S. market. Data were requested for the period January 2000-December 2005. The products for which pricing data were requested are as follows:[16]

Product 1: LM 11949/10–Sets (TS single row, straight 0.75 inch bore cone and TS single row cup, 1.7810 inches in outside diameter ("OD")).

---

[14] Thirteen Chinese producers/exporters did not identify a price leader in the U.S. TRB market. Two of these (***) remarked that TRB imports from China had no price influence on the U.S. producers. *** said that imports from China have caused prices to decrease in the U.S. market since 2000.

[15] No Chinese producers/exporters drew a comparison between market prices in the Chinese, U.S., and third-country markets.

[16] Products 1-7 and 10 were also used in the first five-year reviews. Products 8 and 9 were new products suggested by counsel for Timken and Pacamor Kubar. During the drafting of the questionnaires, counsel for Timken and Pacamor Kubar argued for dropping products 6 to 10 and adding four additional products (two of which were added as products 8 and 9) while counsel for Chinese producers argued for using the same products as in the previous investigations. See comments on the draft questionnaire submitted by Stewart and Stewart, November 15, 2005, and staff telephone interview with Deirdre Maloney for Chinese producers, December 12, 2005.

Product 2: LM 11949–Cone assemblies (TS single row, straight 0.75 inch bore).

Product 3: 25580–Cone assemblies (TS single row, straight 1.75 inch bore).

Product 4: LM 67010–Cups (TS single row cup, 2.328 inches in OD).

Product 5: LM 48548–Cone assemblies (TS single row, 34.925 mm bore, OD 65.088 mm, width 18.034 mm).

Product 6: LM 501349–Cone assemblies (TS single row, 41.275 mm bore, OD 73.431 mm, width 19.558 mm).

Product 7: HM 212049–Cone assemblies (TS single row, straight 2.625 inch bore).

Product 8: LM 11910--TS single row cup, 1.7810 inches in outside diameter ("OD").

Product 9: 28521--Cups (TS single row cup, OD 3.6250", width 0.7813").

Product 10: JLM 104910–Cups (TS single row cup, OD 3.23 inches, width 0.85 inches).

Four U.S. producers (***,[17] ***) and seven importers provided usable pricing data for sales of the requested products, although not all firms reported pricing for all products for all quarters. Pricing data reported by these firms accounted for approximately 9.8 percent of U.S. producers' shipments of TRBs (by quantity) and 26.4 percent of U.S. shipments of subject imports from China in 2005.[18]

TRB price data are presented in appendix G and in figures TRB-V-1 to TRB-V-20.[19] Prices were requested separately for shipments to distributors and OEMs. The data usually showed substantial differences between distributor and OEM price levels, and thus are presented separately.

Price Trends

Comparing the fourth quarter of 2005 with the fourth quarter of 2000, prices were generally up for both Chinese and U.S. pricing products, but usually more for U.S. pricing products than for Chinese, as shown in table TRB-V-1.

---

[17] ***.

[18] In the first five-year reviews, pricing data were 21.9 percent of U.S. shipments and 8.4 percent of Chinese shipments. Catalogues and price lists submitted with some questionnaires indicate that there are a wide variety of TRBs, so high coverage of all shipments may not be possible with a limited number of products. These coverage percentages differ from percentages in the prehearing report mainly due to changes in the shipments from each country. By value, the pricing data represent 1.8 percent of U.S. shipments of U.S. product and 9.2 percent of U.S. shipments of Chinese product in 2005.

[19] In general, prices supplied by individual producers or importers were in the same range with prices supplied by other producers or importers. However, this was not always the case. In some products, different prices by different producers or importers result in brief and large moves up or down that are due to one producer or importer not supplying data in that quarter, and the price thus reflects only the other producers' or importers' prices.

Table TRB-V-1
Tapered roller bearings: Trends in prices of pricing products

Product	U.S. price change for sales to end users, fourth quarter 2000-fourth quarter 2005 (*percent)*	U.S. price change for sales to distributors, fourth quarter 2000-fourth quarter 2005 (*percent)*	China price change for sales to distributors, fourth quarter 2000-fourth quarter 2005 (*percent*)
1	56.9	429.2	-5.0
2	51.0	14.3	-3.0
3	8.2	17.0	0.5
4	19.2	27.3	0.1
5	8.2	18.3	No comparison possible
6	2.7	6.2	4.6
7	23.7	13.5	22.8
8	46.8	19.6	2.5
9	20.7	21.3	No comparison possible
10	3.7	-7.0	1.8
Source: Appendix G, tables G-1 to G-10.			

Price Comparisons

U.S. TRB pricing products sold to distributors generally oversold Chinese TRB pricing products sold through the same channels, as shown in table TRB-V-2.[20]

[20] CCCME argued that the "disconnect" between U.S. and Chinese prices could be due to the Chinese products being through-hardened while U.S. products were case-carburized. CCCME's posthearing brief, p. 14. Counsel for domestic interested parties asserted that case-carburized and through-hardened products compete with each other. Staff telephone interview with Eric Salonen of Stewart and Stewart, May 23, 2006. ***.

Table TRB-V-2
Tapered roller bearings: Chinese underselling (overselling) of U.S. pricing products

Product	Quarterly instances of Chinese product underselling (overselling) U.S. product
1	24 (0)
2	24 (0)
3	22 (0)
4	25 (0)
5	22 (0)
6	24 (0)
7	21 (5)
8	23 (0)
9	13 (0)
10	24 (0)
Total	**222 (5)**
Source: Appendix G, tables G-1 to G-10.	

Table TRB-V-3 shows which firms provided pricing data for which products, and the range of their prices from the first quarter of prices supplied to the last. (Firms may have provided prices outside the range if not in the first or last quarter supplied.)

Table TRB-V-3
Tapered roller bearings: Firms supplying pricing data and their prices in the first quarter of data they supplied and the last quarter of data they supplied.

* * * * * * *

Figure TRB-V-1
Tapered roller bearings: Weighted-average prices to distributors, as reported by U.S. producers and importers of product 1, by quarters, January 2000-December 2005

* * * * * * *

Figure TRB-V-2
Tapered roller bearings: Weighted-average prices to end users, as reported by U.S. producers and importers of product 1, by quarters, January 2000-December 2005

* * * * * * *

Figure TRB-V-3
Tapered roller bearings: Weighted-average prices to distributors, as reported by U.S. producers and importers of product 2, by quarters, January 2000-December 2005

* * * * * * *

Figure TRB-V-4
Tapered roller bearings: Weighted-average prices to end users, as reported by U.S. producers and importers of product 2, by quarters, January 2000-December 2005

* * * * * * *

Figure TRB-V-5
Tapered roller bearings: Weighted-average prices to distributors, as reported by U.S. producers and importers of product 3, by quarters, January 2000-December 2005

* * * * * * *

Figure TRB-V-6
Tapered roller bearings: Weighted-average prices to end users, as reported by U.S. producers and importers of product 3, by quarters, January 2000-December 2005

* * * * * * *

Figure TRB-V-7
Tapered roller bearings: Weighted-average prices to distributors, as reported by U.S. producers and importers of product 4, by quarters, January 2000-December 2005

* * * * * * *

Figure TRB-V-8
Tapered roller bearings: Weighted-average prices to end users, as reported by U.S. producers and importers of product 4, by quarters, January 2000-December 2005

* * * * * * *

Figure TRB-V-9
Tapered roller bearings: Weighted-average prices to distributors, as reported by U.S. producers and importers of product 5, by quarters, January 2000-December 2005

* * * * * * *

Figure TRB-V-10
Tapered roller bearings: Weighted-average prices to end users, as reported by U.S. producers and importers of product 5, by quarters, January 2000-December 2005

* * * * * * *

Figure-TRB-V-11
Tapered roller bearings: Weighted-average prices to distributors, as reported by U.S. producers and importers of product 6, by quarters, January 2000-December 2005

* * * * * * *

Figure TRB-V-12
Tapered roller bearings: Weighted-average prices to end users, as reported by U.S. producers and importers of product 6, by quarters, January 2000-December 2005

* * * * * * *

Figure TRB-V-13
Tapered roller bearings: Weighted-average prices to distributors, as reported by U.S. producers and importers of product 7, by quarters, January 2000-December 2005

* * * * * * *

Figure TRB-V-14
Tapered roller bearings: Weighted-average prices to end users, as reported by U.S. producers and importers of product 7, by quarters, January 2000-December 2005

* * * * * * *

Figure TRB-V-15
Tapered roller bearings: Weighted-average prices to distributors, as reported by U.S. producers and importers of product 8, by quarters, January 2000-December 2005

* * * * * * *

Figure TRB-V-16
Tapered roller bearings: Weighted-average prices to end users, as reported by U.S. producers and importers of product 8, by quarters, January 2000-December 2005

* * * * * * *

Figure TRB-V-17
Tapered roller bearings: Weighted-average prices to distributors, as reported by U.S. producers and importers of product 9, by quarters, January 2000-December 2005

* * * * * * *

Figure TRB-V-18
Tapered roller bearings: Weighted-average prices to end users, as reported by U.S. producers and importers of product 9, by quarters, January 2000-December 2005

* * * * * * *

Figure-TRB-V-19
Tapered roller bearings: Weighted-average prices to distributors, as reported by U.S. producers and importers of product 10, by quarters, January 2000-December 2005

* * * * * * *

Figure TRB-V-20
Tapered roller bearings: Weighted-average prices to end users, as reported by U.S. producers and importers of product 10, by quarters, January 2000-December 2005

* * * * * * *

CHAPTER TWO: BALL BEARINGS

PART I: OVERVIEW

This chapter presents information pertaining to the Commission's reviews involving the antidumping duty orders on BBs from France, Germany, Italy, Japan, Singapore, and the United Kingdom. A summary of the data collected in these reviews is presented in appendix table C-2. U.S. industry data are based on questionnaire responses of 21 firms that are believed to account for the majority of U.S. production of BBs in 2005.[1] U.S. import data are based on official Commerce statistics adjusted to both exclude producers/exporters for which the order has been revoked[2] and to subtract products that have been excluded from the scope. Available comparative data from the original investigations and the current five-year reviews are presented in table BB-I-1. Figure BB-I-1 presents the trends of BB imports from the subject countries and all other sources for the period 1985 to 2005 based on official Commerce statistics.

The value of all imports of BBs increased significantly following imposition of the orders, from $421.8 million in 1987 to $979.6 million in 1998. The increase in total BB imports is largely attributable to a sharp rise in nonsubject imports following imposition of the orders.[3] The market share of nonsubject imports increased from 5.2 percent in 1987 to 14.7 percent in 1998. The market share of subject BB imports decreased by 5.9 percentage points over the same period, even though imports of subject BBs, by value, increased by 47.7 percent from 1987 to 1998. Despite continued expansion of BB facilities by Japanese companies in the United States following imposition of the orders, BB imports from Japan increased by 79.4 percent from 1987 to 1998. The value of subject imports from Germany and Italy

---

[1] Firms that provided data during the first reviews that did not respond during the current reviews consist of: ART Technologies, Inc. (firm sales accounted for *** percent of the value of total U.S. shipments in 1998); Frantz Manufacturing Co. (firm sales accounted for *** percent); Frost, Inc. (firm sales accounted for *** percent); Gear Products (firm sales accounted for *** percent); Kaydon Corp. (firm sales accounted for *** percent); Kendale Industries, Inc. (firm sales accounted for *** percent); National Bearings Co. (firm sales accounted for *** percent); Phillips-Moldex Co. (firm sales accounted for less than *** percent); and Roller Bearing Co. of America (now RBC Bearings, Inc. or RBC) (firm sales accounted for *** percent). In addition, the following firms indicated that they are no longer manufacturing BBs in the United States: American Roller Bearing Industries, Inc. (firm sales accounted for less than *** percent of the value of total U.S. shipments in 1998) and Nucor Bearing Products (accounted for *** percent). Shares of U.S. producers' shipments for 1998 are obtained from the confidential staff report INV-X-101 (May 8, 2000).

SKF indicates in its posthearing brief that two of what it labels the four largest U.S.-owned domestic producers, RBC Bearings Inc. and Kaydon Corp. did not respond and, based on public financial data, "these two companies may have accounted for as much as $228 million in U.S. sales of ball bearings in 2005." SKF's posthearing brief, p. 1. Although, as indicated above, Roller Bearing Co. of America accounted for a *** share of U.S. BB production in 1998, it now produces BBs in Torrington, CT (RBC Aircraft Products, Inc.), Rancho Dominquez, CA (Industrial Tectonics Bearings Corp.), and Kulpsville, PA (RBC Nice Bearings). RBC's sales of "ball bearings" in 2005 were $***. RBC's producer questionnaire response. The staff report for the first reviews included RBC's operations in Kulpsville, PA and Rancho Dominquez, CA but did not include the former Torrington-owned aircraft operations (in Torrington, CT) that were subsequently acquired by RBC.

[2] These producers/exporters consist of: SNFA France (France), Paul Mueller GmbH & Co. KG (Germany), Somecat/S.N.F.A. Bearing Ltd. (Italy), Honda Motor Co., Ltd. (Japan), and S.N.F.A. Bearing Ltd. (United Kingdom).

[3] For the purposes of this discussion, the term nonsubject is used to refer to all countries currently not subject to the antidumping duty orders on BBs (i.e., countries other than France, Germany, Italy, Japan, Singapore, and the United Kingdom) and the term subject is used to refer to France, Germany, Italy, Japan, Singapore, and the United Kingdom.

Table BB-I-1
Ball bearings: Comparative data on the U.S. market and industry from the original investigations, first five-year reviews, and the current five-year reviews, 1985-87, 1997-98, and 2000-05

Item	1985	1986	1987	1997	1998	2000	2001	2002	2003	2004	2005
(Value = *1,000 dollars*; quantity = *1,000 units*; unit values, unit labor costs, and unit financial data are *per unit*; hours worked=*1,000*; and productivity = *units per hour*)											
U.S. consumption:											
Value	1,684,652	1,592,722	1,590,606	3,206,879	3,252,975	2,905,077	2,581,543	2,593,399	2,478,544	2,592,238	2,742,792
Producers' share[1]	77.3	74.5	73.4	70.5	69.9	67.5	67.8	67.9	67.4	63.7	63.2
Importers' share:											
France[1 2]	0.6	0.9	1.0	0.7	0.8	0.9	1.0	0.9	0.9	1.0	0.9
Germany[1 2]	2.8	3.6	4.3	1.5	1.5	1.3	1.3	1.2	1.4	1.7	1.9
Italy[1 2]	1.3	2.2	1.4	0.6	0.6	0.8	0.7	1.2	1.3	1.3	0.7
Japan[1 2]	11.9	12.1	12.4	10.8	10.8	9.6	9.0	7.9	7.7	8.4	9.2
Singapore[1]	1.3	1.3	1.4	1.4	1.3	1.2	1.0	0.8	0.5	0.3	0.1
United Kingdom[1 2]	0.7	0.9	0.9	0.5	0.5	0.4	0.4	0.3	0.3	0.4	0.4
Subtotal[1]	18.6	21.0	21.4	15.5	15.5	14.1	13.5	12.3	12.2	13.1	13.3
All others[1 3]	4.1	4.6	5.2	14.0	14.7	18.4	18.7	19.8	20.4	23.2	23.6
Total imports[1]	22.7	25.5	26.6	29.5	30.1	32.5	32.2	32.1	32.6	36.3	36.8
Value of U.S. imports from:											
France[2]	10,666	14,481	16,343	23,900	24,832	27,008	25,788	22,549	22,029	25,014	23,807
Germany[2]	47,811	57,755	68,340	48,999	47,482	36,814	33,978	30,174	33,779	45,071	51,816
Italy[2]	22,643	34,448	22,719	18,323	19,435	21,813	18,559	32,185	33,417	33,321	20,556
Japan[2]	200,002	192,200	196,051	347,409	351,652	277,538	231,115	204,350	191,413	218,125	253,389
Singapore	21,576	20,811	22,073	45,548	42,690	35,033	26,994	21,291	12,362	6,681	3,473
United Kingdom[2]	11,920	13,595	13,601	17,231	14,862	11,768	10,817	8,074	8,219	10,487	11,284
Subtotal[3]	314,618	333,290	339,127	501,410	500,953	409972.8	347,252	318,622	301,219	338,699	364,325

Table continued on next page.

Table BB-I-1--*Continued*

Ball bearings: Comparative data on the U.S. market and industry from the original investigations, the first five-year reviews, and the current five-year reviews, 1985-87, 1997-98, and 2000-05

Item	1985	1986	1987	1997	1998	2000	2001	2002	2003	2004	2005
(Value = *1,000 dollars*; quantity = *1,000 units*; unit values, unit labor costs, and unit financial data are *per unit*; hours worked=*1,000*; and productivity = *units per hour*)											
Value of U.S. imports from:											
All others[3]	68,348	72,662	82,718	445,852	478,609	534,592	483,191	514,569	506,499	601,536	646,354
Total imports	382,967	405,951	421,845	947,262	979,561	944,565	830,443	833,192	807,718	940,234	1,010,680
U.S. producers':											
Capacity	295,556	265,295	258,907	609,982	640,673	448,826	426,262	421,743	396,329	354,689	338,388
Production	215,097	194,834	198,630	464,295	449,413	328,200	260,793	256,278	242,468	226,236	203,819
Capacity utilization[1]	72.8	73.4	76.7	76.1	70.1	73.1	61.2	60.8	61.2	63.8	60.2
U.S. shipments[4]											
Quantity	208,826	183,392	188,696	436,808	417,000	299,253	248,255	235,541	204,805	190,417	174,027
Value	1,301,685	1,186,771	1,168,827	2,259,617	2,273,414	1,960,512	1,751,100	1,760,207	1,670,826	1,652,004	1,732,112
Unit value	(5)	(5)	(5)	$4.70	$4.96	$6.10	$6.63	$6.95	$7.66	$8.15	$9.40
EOP inventories qty[6]	26,824	23,831	20,510	53,779	42,836	35,676	28,923	29,091	29,476	26,639	25,316
Inventories/U.S. shipments[1]	12.8	13.0	10.9	12.3	10.3	11.9	11.7	12.4	14.4	14.0	14.5
Production workers	12,937	12,029	11,681	12,278	12,284	10,885	9,994	9,390	9,012	8,480	8,424
Hours worked	27,661	26,050	25,339	27,637	27,428	21,247	19,696	18,683	17,562	16,678	16,780
Wages paid value	325,733	323,599	308,603	478,671	486,779	386,529	362,390	368,757	356,244	342,468	351,831
Hourly wages	$11.78	$12.42	$12.18	17.17	17.60	$18.19	$18.40	$19.74	$20.28	$20.53	$20.97
Productivity[7]	(5)	(5)	(5)	19.0	18.5	17.2	14.6	15.2	15.4	15.2	13.5
Net sales	1,455,208	1,332,555	1,327,502	2,258,695	2,250,458	2,160,191	1,929,613	1,912,983	1,848,649	1,810,191	1,901,786
COGS	1,158,409	1,081,317	1,101,005	1,862,058	1,860,427	1,801,836	1,661,244	1,636,934	1,628,358	1,623,345	1,683,172
Gross profit	296,799	251,238	226,497	396,637	390,031	358,355	268,369	276,049	220,291	186,846	218,614
Operating income	126,081	94,543	88,760	170,255	148,126	131,969	57,125	60,864	14,764	(8,700)	7,344
Cost of goods sold/sales[1]	79.6	81.1	82.9	82.4	82.7	83.4	86.1	85.6	88.1	89.7	88.5
Operating income/sales[1]	8.7	7.1	6.7	7.5	6.6	6.1	3.0	3.2	0.8	(0.5)	0.4

Continuation.

[1] In percent.
[2] ***.
[3] Includes imports from countries that were also subject to the original investigations (Thailand, Romania, and Sweden) and covered in the first five-year reviews (Romania and Sweden), but which are not currently subject to antidumping duty orders. As indicated above, also includes imports from producers/exporters that have been excluded from the antidumping duty orders.
[4] Values include complete bearings and parts; quantities include only complete bearings; unit values are calculated on the basis of complete bearings only (the use of unit values is, however, limited due to the extensive range of bearings).
[5] Not available.
[6] Data are for complete bearings only.
[7] Productivity calculated on the basis of complete bearings only.

Note.–Value-based and employment data include parts of BBs. Thirty-six firms that were believed to account for the "vast majority" of BB production in the United States reported trade data during the first five-year reviews; 26 firms, accounting for over 90 percent of reported U.S. shipments, also provided financial data. Twenty-one firms that are believed to account for a lesser share of the U.S. BB industry reported trade data during the current five-year reviews. (The comparability of the U.S. producers' data for the five-year reviews to that presented in the original investigations cannot be precisely determined. The original investigations covered all antifriction bearings other than tapered roller bearings; producers responding to the Commission's questionnaires were believed to account for approximately 80 percent of total U.S. shipments of the subject antifriction bearings in 1987.) U.S. import data are derived from official Commerce statistics that (1) *** and (2) were adjusted for 2000-05 to reflect the revocations of the BB orders for certain companies (SNFA France for France, Paul Mueller for Germany, Somecat/SNFA for Italy, Honda for Japan, and SNFA UK for the UK). Official Commerce statistics for 2000-05 were also adjusted to exclude bearings that Commerce has excluded from the orders and other non-subject product.

Source: Data for 1985-87 compiled or derived from confidential staff report (April 24, 1989); data for 1997-98 compiled or derived from confidential staff report INV-X-101 (May 8, 2000) and revisions to staff report INV-X-116 (May 30, 2000); and data for 2000-05 compiled from responses to Commission questionnaires and (adjusted) official Commerce statistics.

Figure BB-I-1
Ball bearings: U.S. imports from France, Germany, Italy, Japan, Singapore, the United Kingdom, and all other sources, 1985-2005

Source: Table BB-I-1, except for 1999 which is from official Commerce statistics.

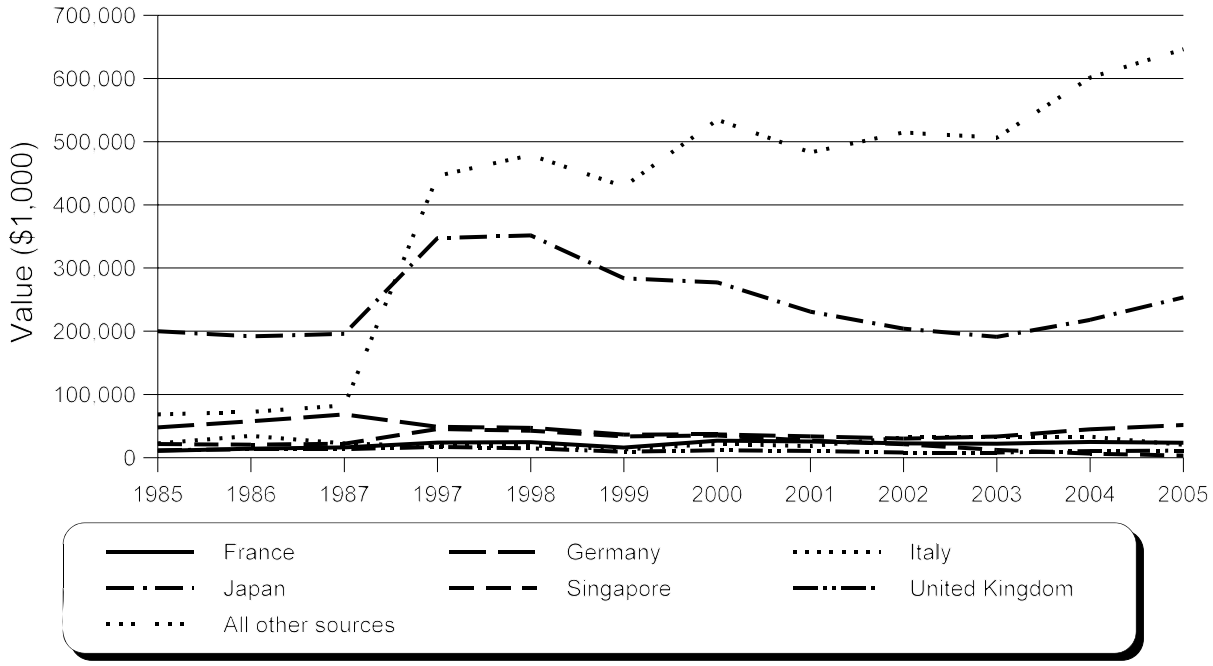

decreased from 1987 to 1998. The decrease was most likely attributable to foreign firms switching production to the United States after the orders went into effect.

The value of all imports of BBs in 2000 is somewhat less than the value of all imports in 1998.[4] The value of imports of BBs from the subject countries is also lower in 2000 compared to 1998. These decreases will, in part, reflect additional adjustments that have been made to the official Commerce statistics on which the import data are based. However, both the value of total U.S. imports and subject imports continued to decline for the next three years[5] before turning upward in 2004 and 2005.

COMMERCE'S RESULTS OF SUNSET REVIEWS

On October 5, 2005, Commerce determined in its expedited second five-year reviews that revocation of the antidumping duty orders on BBs from France, Germany, Italy, and the United Kingdom would likely lead to a continuation or recurrence of dumping.[6] Commerce's notice indicated that the reviews covered imports from all manufacturers and exporters of BBs in the subject countries, except for Paul Mueller for which the order was revoked.[7] With respect to the antidumping duty orders on BBs from Japan and Singapore, on May 4, 2006, Commerce determined in its full second five-year reviews that revocation of the antidumping duty orders on BBs would likely lead to a continuation or recurrence of dumping.[8] Commerce also conducted a changed circumstances review where it concluded that JTEKT Corp. ("JTEKT") is the successor-in-interest to Koyo Seiko Co., Ltd. ("Koyo") and, as a result, should be accorded the same treatment previously accorded to Koyo with respect to the antidumping duty order on BBs from Japan.[9] *See* table G-2 for a list of products excluded from the scope of the orders for "antifriction bearings (other than tapered roller bearings and parts thereof) from France, Germany, Italy,

---

[4] Data for 1999 are not presented in table BB-I-1.

[5] A slight upturn in the value of all imports is shown for 2002.

[6] *Antifriction Bearings and Parts Thereof from France, Germany, Italy, and the United Kingdom; Five-Year Sunset Reviews of Antidumping Duty Orders; Final Results*, 70 FR 58183.

[7] *Antifriction Bearings and Parts Thereof From: France, Germany, Italy, Japan, Singapore, and the United Kingdom: Final Results of Antidumping Duty Administrative Reviews, Recession of Administrative Reviews in Part, and Determination To Revoke Order in Part*, 69 FR 55574, September 15, 2004. There have, however, been additional revocations of the antidumping duty orders. Effective May 1, 1999, Commerce also revoked the order covering BBs from France as it pertained to sales by SNFA France and the order covering BBs from Italy as it pertained to sales by Somecat. *Antifriction Bearings (Other Than Tapered Roller Bearings) and Parts Thereof From France, Germany, Italy, Japan, Romania, Singapore, Sweden, and the United Kingdom: Final Results of Antidumping Duty Administrative Reviews and Revocation of Orders in Part*, 65 FR 49219, August 11, 2000. Effective May 1, 2000, Commerce also revoked the order covering BBs from the United Kingdom as it pertained to sales by SNFA UK. *Antifriction Bearings (Other Than Tapered Roller Bearings) and Parts Thereof From France, Germany, Italy, Japan, Romania, Singapore, Sweden, and the United Kingdom; Final Results of Antidumping Duty Administrative Reviews and Revocation of Orders in Part*, 66 FR 36551, July 12, 2001.

[8] *Ball Bearings and Parts Thereof from Japan and Singapore; Five-Year Sunset Reviews of Antidumping Duty Orders; Final Results*, 71 FR 26321.

[9] 71 FR 26452, May 5, 2006. JTEKT was formed on January 1, 2006, due to the merger of Koyo, a bearings manufacturer in Japan, and Toyoda Machine Works, Ltd. ("Toyoda"). Koyo stated in a submission to Commerce that because Toyoda had not produced or sold bearing products, the production and sale of subject merchandise would continue under JTEKT in the same manner as performed by Koyo and no changes in supplier relationships or the customer base from that of Koyo were anticipated. 71 FR 14679, March 23, 2006.

Japan, Singapore, and the United Kingdom."[10] The original margins and sunset margins for the first and second five-year reviews are presented in table BB-I-2.

Table BB-I-2
Original and five-year review margins for BB producers/exporters, by subject country

Producer/exporter	Original margin *(percent)*	First five-year review margin *(percent)*	Second five-year review margin[1] *(percent)*
France			
INA	66.18	66.18	66.18
SKF	66.42	66.42	66.42
SNR	56.50	56.50	56.50
All others	65.13	65.13	65.13
Germany			
SKF	132.25	132.25	132.25
FAG	70.41	70.41	70.41
INA	31.29	31.29	31.29
GMN	35.43	35.43	([1])
All others	68.89	68.89	68.89
Italy			
SKF	69.99	69.99	69.99
FAG	68.29	68.29	68.29
All others	155.57	155.57	155.57
Japan			
Nippon Pillow Block	2.55	2.55	([1])
Koyo	73.55	73.55	12.78
Minebea	106.61	106.61	106.61
Nachi	48.69	48.69	48.69
NSK	42.99	42.99	8.25[2]
NTN	21.36	21.36	5.93
All others	45.83	45.83	45.83

Table continued on next page.

[10] The list is drawn from the *Scope Determination Memorandum from the Antifriction Bearings Team to Laurie Parkhill*, official file date of April 15, 2005, which is referenced in Commerce's expedited sunset determinations. 70 FR 58183, October 5, 2005. The scope exclusions listed in the April 15, 2005 memorandum were those incorporated into the definitions of the subject products used by the Commission in the questionnaires it issued in January 2006 (and on which the data presented in this report are based). For the 2004/2005 administrative reviews of the orders on ball bearings and parts thereof from various countries including Japan, Commerce has placed a document entitled *Scope Determination Memorandum from the Antifriction Bearings Team to Laurie Parkhill, dated March 2, 2006,* on file at its Central Record Unit.

Table BB-I-2--*Continued*
Original and five-year review margins for BB producers/exporters, by subject country

Producer/exporter	Original margin *(percent)*	First five-year review margin *(percent)*	Second five-year review margin[1] *(percent)*
Singapore			
NMB/Pelmec	25.08	25.08	25.08
All others	25.08	25.08	25.08
United Kingdom			
Barden	([3])	54.27	([1])
NSK/RHP	44.02	44.02	44.02
SKF	61.14	54.27[4]	61.14
All others	54.27	54.27	54.27

[1] Not listed.
[2] Amended (71 FR 30378, May 26, 2006).
[3] Commerce provided a margin based on the "all others" rate from the original investigation because Barden was not involved in the original antidumping investigation.
[4] SKF was assigned an "all others" rate for its sunset margin.

Source: Commerce's antidumping duty orders (52 FR 20900, May 15, 1989); Commerce's final results of its first five-year reviews (64 FR 60266, November 4, 1999); Commerce's final results of its second five-year reviews for France, Germany, Italy, and the United Kingdom (70 FR 58183, October 5, 2005); Commerce's final results of its second five-year reviews for Singapore and Japan (71 FR 26321, May 4, 2006), as amended for NSK Ltd. (Japan) (71 FR 30378, May 26, 2006).

Commerce made the following duty absorption findings during the period examined in its first five-year reviews:

(1) In the 1995-96 and 1997-98 administrative reviews, Commerce found that antidumping duties were being absorbed by French BB producers.
(2) In the 1995-96 and 1997-98 administrative reviews, Commerce found that antidumping duties were being absorbed by German BB producers.
(3) Commerce issued duty absorption findings for two producers and/or exporters of BBs from Italy in the 1995-96 and 1997-98 administrative reviews.
(4) Commerce made duty absorption findings in the 1995-96 and 1997-98 administrative reviews on BBs from Japan. The administrative review margins, adjusted to account for duty absorption, are lower than the margins from the original investigation or from the first administrative review of this order, with the exception of those for NPBS.[11] Commerce found that NPBS was absorbing duties on BBs in both of the above-cited administrative reviews. For purposes of considering duty absorption in the first sunset review, Commerce relied on the level of duty absorption found in the 1997-98 administrative review. The adjusted rate was higher than the rate from the 1996-97 administrative review (the rate Commerce would

[11] Commerce's *Sunset Policy Bulletin* provides that, where Commerce has found duty absorption, it will provide to the Commission the higher of the margin that Commerce otherwise would have reported (usually the results of the original determination) or the most recent margin for that company, adjusted to account for Commerce's findings on duty absorption.

have otherwise reported). Therefore, Commerce used the adjusted rate as NPBS's sunset margin. For all other companies Commerce found that the margins calculated in the original investigation or the first administrative review are probative of the behavior of Japanese producers and/or exporters absent the discipline of the order.

(5) Commerce determined that NMB/Pelmec of Singapore was absorbing duties in the 1995-96 administrative review.

(6) With respect to the United Kingdom, Commerce found that duty absorption existed on Barden's exports of BBs and NSK/RHP's exports of BBs in its 1995-96 and 1997-98 administrative reviews. With respect to Barden, the "all others" rate from the original investigation was higher than the margin Commerce adjusted to account for duty absorption; therefore, Barden's sunset margin is the "all others" margin from the original investigation. For NSK/RHP, the margin from the original investigation for BBs was higher than the rate adjusted for duty absorption, so the sunset margin is the same as the rate from the original investigation.

For each of these findings the margins for the administrative reviews, adjusted for duty absorption, were lower than the rates from the original investigations; therefore, Commerce's final results of its first expedited reviews use the dumping margins calculated in the original investigations (table BB-I-2). With respect, however, to its second full review for Japan, Commerce stated that based on its analysis of the comments it received, it found that it was appropriate to report a more recently calculated margin to the Commission for certain respondents.[12] Commerce has made no duty absorption findings with respect to the orders on BBs from France, Germany, Italy, Japan, Singapore, and the United Kingdom during the second five-year review period.[13]

COMMERCE'S ADMINISTRATIVE REVIEWS ON FRANCE, GERMANY, ITALY, JAPAN, SINGAPORE, AND THE UNITED KINGDOM

France

There have been 15 administrative final reviews and 1 preliminary review on BBs from France since the order was imposed. The results of those reviews are presented in table BB-I-3. In the 1995-96 and 1997-98 administrative reviews, Commerce found that antidumping duties were being absorbed. Duty absorption findings are noted where relevant.

[12] 71 FR 26321, May 4, 2006.

[13] Japanese respondents state that both the Court of Appeals for the Federal Circuit and the Court of International Trade have held that Commerce lacked statutory authority to conduct duty absorption inquiries in the administrative reviews and "have ordered Commerce to annul the duty absorption findings made in those reviews." Japanese respondents' prehearing brief, exh. 1C. Further, with respect to BBs from Germany, the CIT remanded to Commerce to annul all findings and conclusions made pursuant to its duty absorption inquiry conducted for the ninth administrative review (1997-98) on the basis that Commerce lacked statutory authority to conduct a duty absorption inquiry because the review was not "initiated two years or four years after the publication of the (original) antidumping order" as provided in the statute, 19 U.S.C. §1675(c)(6)(D). SKF USA, Inc., et al. v. United States, Slip Op. 00-32 (March 22, 2000).

Table BB-I-3
Results of administrative reviews relating to ball bearings from France

Producer/ exporter	Period of review	Date results published	Margin *(percent)*
SKF	11/9/88-4/30/90	July 11, 1991 (56 FR 31748)	7.79
SNECMA			0.21
Fiat Avio			0.00
ADH			2.64
Turbomeca			6.85
Pratt Whitney			4.33
SNR			2.03
INA			66.42
SNFA			66.42
Dowty			0.00
All others			7.79
ADH	5/1/90-4/30/91	June 24, 1992 57 FR (28360)[1]	7.17
Dassault			11.42
Fiat Avio			0.15
INA			66.42
MBB			0.19
Pratt & Whitney			9.37
SKF			8.56
SNFA			66.42
SNR			8.08
SNECMA			6.20
Turbomeca			6.76
All others			15.96
Dassault	5/1/91-4/30/92	July 26, 1993 58 FR (39729)[2]	0.05
SKF			1.97
SNFA			66.42
SNR			1.13
SNECMA			0.05
Turbomeca			0.00
Valeo			66.42

Table BB-I-3--*Continued*
Results of administrative reviews relating to ball bearings from France

Producer/ exporter	Period of review	Date results published	Margin *(percent)*
All others	5/1/91-4/30/92	July 26, 1993 58 FR (39729)[2]	65.13
Franke & Heydrich	5/1/92-4/30/93	February 28, 1995 (60 FR 10900)[3]	66.42
SKF			3.74
SNFA			66.42
SNR			1.89
AVIAC	5/1/93-4/30/94	December 17, 1996 (61 FR 66472)[4]	0.47
Franke & Heydrich			66.42
INA			66.42
SKF			3.75
SNFA			66.42
SNR			0.73
Technofan			14.59
Franke GMbH[5]	5/1/94-4/30/95	January 15, 1997 (62 FR 2081)[6]	66.42
Intertechnique			1.55
SKF			16.61
SNFA			66.42
SNR			3.05
SKF[7]	5/1/95-4/30/96	October 17, 1997 (62 FR 54043)	10.80
SNFA			66.42
SNR[7]			8.60
SKF	5/1/96-4/30/97	June 18, 1998 (63 FR 33320)	8.31
SNFA			0.45
SKF[7]	5/1/97-4/30/98	July 1, 1999 (64 FR 35590)[8]	7.40
SNFA			0.41
SNR[7]			0.31
SKF	5/1/98-4/30/99	August 11, 2000 (65 FR 49219)	11.43
SNFA			0.00
SNR			0.39
SNR	5/1/99-4/30/00	July 12, 2001 (66 FR 36551)	1.64
Alfateam			66.18

Table BB-I-3--*Continued*
Results of administrative reviews relating to ball bearings from France

Producer/ exporter	Period of review	Date results published	Margin *(percent)*
Alfa-Team	5/1/99-4/30/00	July 12, 2001 (66 FR 36551)	66.18
Motion Bearings			66.18
Yoo Shin			66.18
DCD			66.18
SKF	5/1/00-4/30/01	August 30, 2002 (67 FR 55780)	8.51
Bearings Discount			66.18
Rodriguez			66.18
DCD			66.18
SNR	5/1/01-4/30/02	June 16, 2003 (68 FR 35623)[9]	3.52
SKF			10.08
Ringball	5/1/02-4/30/03	September 15, 2004 (69 FR 55574)	2.94
SKF			5.25
SNR			6.40
([10])			66.42
SKF	5/1/03-4/30/04	September 16, 2005 (70 FR 54711)	8.41
SNR			11.93
SKF	5/1/04-4/30/05[11]	March 9, 2006 (71 FR 12170)	12.56
SNR			12.79

[1] Results of 1990-91 review were amended on July 24, 1992, December 14, 1992, and February 23, 1998.
[2] Results of 1991-92 review were amended on September 30, 1993, December 15, 1993, and April 16, 1998.
[3] Results of 1992-93 review were amended on March 31, 1995 and May 15, 1995.
[4] Results of 1993-94 review were amended on August 2, 1997 and November 15, 2000.
[5] Formerly Franke & Heydrich.
[6] Results of 1994-95 review were amended on March 26, 1997, June 25, 1997, and March 14, 2006.
[7] Commerce made a duty absorption finding in this instance.
[8] *See also* 69 FR 62023, October 22, 2004 (*Notice of Final Court Decision*).
[9] Results of 2001-02 review were amended on July 24, 2003.
[10] Rate determined for the following companies: Ace Bearing and Transmission Service, Aktif Endustrie Malzemeleri, Alphateam SPRL, Australian Bearing Pty Ltd, Baltic Bearing Supply, Bearing and Tool GmbH, Bearing Dynamics, Bearing Sales Corp., Budapesti Sved Csapagy Ltd, Cantoni and C.S.N.C, CCVI Bearing Co., DCD Corp., Delta Export GmbH, EuroLatin Ex. Services, Fair Friend Ent. Co. Ltd, Friedrich Picard GmbH, Frohlich and Dorken GmbH, Han Sol Tech. Corp/Yoo Shin Co, Hayley Import/Export, Heinz Knust, Hergenhan GmbH, Hoens Industrieel BV, IBD Ltd, International Bearing Pte. Ltd, Italcuscinetti Group, Kian Ho Bearings, Ltd, KIS Antriebs Technik GmbH, KSM, Minamiguchi/Bearing Manufacturing Co., LTM Industrietechnik, M. Buchhalter Maschenmode/Hergenhan, Micaknowledge, Minetti SpA, Ming Hing Trading Co., Motion Bearing Pte. Ltd, Rodamietos Rovi, Roeirasa, Rovi-Marcay, Rovi-Valencia, Taninaka Ltd, Top G Trading Pte Ltd, Weber Kugellager Int., Withus Technology Corp., and Wyko Export.
[11] Preliminary.

Source: USITC Publication 3309 (June 2000) and cited *Federal Register* notices from 2000 to date.

Germany

There have been 15 administrative reviews and 1 preliminary review on BBs from Germany since the order was imposed. The results of those reviews are presented in table BB-I-4. In the 1995-96 and 1997-98 administrative reviews, Commerce found that antidumping duties were being absorbed. Duty absorption findings are noted where relevant.

Italy

Commerce has conducted 15 administrative reviews and 1 preliminary review with respect to BBs from Italy. The results of those reviews are presented in table BB-I-5. The order covers all producers/exporters of BBs. Duty absorption findings are noted where relevant.

Japan

Commerce has conducted 15 administrative reviews and 1 preliminary review on BBs from Japan since the order was imposed. The results of those reviews are presented in table BB-I-6. In the 1995-96 and 1997-98 administrative reviews, Commerce found that antidumping duties were being absorbed. Duty absorption findings are noted where relevant.

Singapore

Commerce has conducted 12 administrative reviews on BBs from Singapore since the order was imposed. The results are shown in table BB-I-7. The order on BBs from Singapore covers imports from all known Singaporean producers and/or exporters. Commerce issued a duty absorption finding for NMB/Pelmec in the 1995-96 administrative review.

United Kingdom

Commerce has conducted 14 final administrative reviews and 1 preliminary review on BBs from the United Kingdom since the order was imposed. The results are shown in table BB-I-9. In the 1995-96 and 1997-98 administrative reviews, Commerce determined that duty absorption occurred. Duty absorption findings are noted where relevant.

Table BB-I-4
Results of administrative reviews relating to ball bearings from Germany

Producer/ exporter	Period of review	Date results published	Margin *(percent)*
Dowty Rotol	11/9/88-4/30/90	July 11, 1991 (56 FR 31692)	8.11
FAG			11.93
Fiat Avio			12.86
GRW			0.14
GMN			2.84
HDM			0.00
INA			10.56
MBB			0.00
NWG			51.56
NTN-FRG			5.36
Pratt & Whitney			5.25
SKF-FRG			5.25
ZF			42.72
All others			51.56
ADH	5/1/90-4/30/91	June 24, 1992 57 FR (28360)[1]	24.02
FAG			20.10
FiatAvio			4.14
GMN			0.29
INA			19.90
MBB			1.32
NWG			6.69
Pratt & Whitney			11.10
SKF			12.08
All others			24.02
FAG	5/1/91-4/30/92	July 26, 1993 58 FR (39729)[2]	11.81
Fichtel & Sachs			6.79
GMN			0.07
INA			22.74
NTN			0.22
SKF			14.81

Table BB-I-4--*Continued*
Results of administrative reviews relating to ball bearings from Germany

Producer/ exporter	Period of review	Date results published	Margin *(percent)*
All others	5/1/91-4/30/92	July 26, 1993 58 FR (39729)[2]	68.89
FAG	5/1/92-4/30/93	February 28, 1995 (60 FR 10900)[3]	11.83
Fitchel & Sachs			14.83
Franke & Heydrich			132.25
GMN			35.43
INA			23.19
NTN			8.41
SKF			15.53
Cross-Trade	5/1/93-4/30/94	December 17, 1996 (61 FR 66472)[4]	132.25
EXTA			68.89
FAG			13.06
Fichtel & Sachs			19.60
Franke & Heydrich			132.25
INA			31.29
NTN			12.50
SKF			2.67
SNR			3.69
FAG	5/1/94-4/30/95	January 15, 1997 (62 FR 2081)[5]	13.43
Franke			132.25
INA			19.50
NTN			18.38
SKF			2.53
FAG[6]	5/1/95-4/30/96	October 17, 1997 (62 FR 54043)[7]	12.40
INA[6]			49.62
NTN[6]			9.44
SKF[6]			4.25
SKF	5/1/96-4/30/97	June 18, 1998 (63 FR 33320)	2.26
SKF[6]	5/1/97-4/30/98	July 1, 1999 (64 FR 35590)[8]	1.23
FAG[6]			2.93
INA[6]			7.38

Table BB-I-4--*Continued*
Results of administrative reviews relating to ball bearings from Germany

Producer/ exporter	Period of review	Date results published	Margin *(percent)*
FAG	5/1/98-4/30/99	August 11, 2000 (65 FR 49221)	7.03
INA			19.54
NTN			70.41
Paul Mueller			0.00
SKR			6.39
SNR			5.92
Cerobear	5/1/99-4/30/00	July 12, 2001 (66 FR 36551)	0.03
Torrington			1.22
Alfateam			70.41
Alfa-Team			70.41
Motion Bearings			70.41
Yoo Shin			70.41
DCD			70.41
FAG	5/1/00-4/30/01	August 30, 2002 (67 FR 55780)	0.34
Torrington			1.22
Bearings Discount			70.41
Paul Mueller			0.04
Rodriguez			70.41
DCD			70.41
FAG	5/1/01-4/30/02	June 16, 2003 (68 FR 35623)	1.45
Torrington			70.41
Paul Mueller			0.19
SKF			3.38
INA/FAG	5/1/02-4/30/03	September 15, 2004 (69 FR 55574)[9]	5.59
Paul Mueller			0.36
Ringball			6.54
SKF			2.54
([10])			70.41
FAG/INA	5/1/03-4/30/04	September 16, 2005 (70 FR 54711)	5.65
GRW			4.58

Table BB-I-4--*Continued*
Results of administrative reviews relating to ball bearings from Germany

Producer/ exporter	Period of review	Date results published	Margin *(percent)*
SKF	5/1/03-4/30/04	September 16, 2005 (70 FR 54711)	16.06
FAG/INA	5/1/04-4/30/05[11]	March 9, 2006 (71 FR 12170)	4.03
GRW			1.21
SKF			7.35

[1] Results of 1990-91 review were amended on July 24, 1992, December 14, 1992, and February 23, 1998.
[2] Results of 1991-92 review were amended on September 30, 1993, December 15, 1993, and April 16, 1998.
[3] Results of 1992-93 review were amended on June 13, 1995, September 26, 1995, November 14, 2001, and November 16, 2001.
[4] Results of 1993-94 review were amended on August 2, 1997, November 15, 2000, and February 25, 2002.
[5] Results of 1994-95 review were amended on March 26, 1997, June 25, 1997, and March 14, 2006.
[6] Commerce made a duty absorption finding in this instance.
[7] Results of the 1995-96 review were amended March 14, 2006.
[8] *See also* 69 FR 62023, October 22, 2004 (*Notice of Final Court Decision*).
[9] Results of the 2002-03 review were amended on November 2, 2004.
[10] Rate determined for the following companies: Ace Bearing and Transmission Service, Acorn Industrial Services Ltd, Aktif Endustrie Malzemeleri, Alphateam SPRL, Australian Bearing Pty Ltd, Baltic Bearing Supply, Bearing and Tool GmbH, Bearing Dynamics, Bearing Sales Corp., Budapesti Sved Csapagy Ltd, Cantoni and CSNC, CCVI Bearing Co., DCD Corp., Delta Export GmbH, EuroLatin Ex Services, Fair Friend Ent. Co. Ltd, Friedrich Picard GmbH, Frohlich and Dorken GmbH, Han Sol Tech Corp/Yoo Shin Co., Hayley Import/Export, Heinz Knust, Hergenhan GmbH, Hoens Industrieel BV, IBD Ltd, International Bearing Pte Ltd, Italcuscinetti Group, Kian Ho Bearings Ltd, KIS Antriebs Technik GmbH, KSM, Minamiguchi/Bearing Manufacturing Co., LTM Industrietechnik, M Buchhalter Maschenmode/Hergenhan, Micaknowledge, Minetti SpA, Ming Hing Trading Co., Motion Bearing Pte Ltd, Rodamietos Rovi, Roeirasa, Rovi-Marcay, Rovi-Valencia, Taninaka Ltd, Top G Trading Pte Ltd, Weber Kugellager Int, Withus Technology Corp., and Wyko Export.
[11] Preliminary.

Source: USITC Publication 3309 (June 2000) and cited *Federal Register* notices from 2000 to date.

Table BB-I-5
Results of administrative reviews relating to ball bearings from Italy

Producer/ exporter	Period of review	Date results published	Margin *(percent)*
FAG-Cuscinetti	11/9/88-4/30/90	July 11, 1991 (56 FR 31751)	4.40
Meter			11.67
FiatAvio			0.00
RIV-SKF			4.06
SNECMA			0.78
Somecat			155.99
Dowty Rotol			11.67
All others			11.67
ADH	5/1/90-4/30/91	June 24, 1992 (57 FR 28360)[1]	0.24
FAG			6.14
FiatAvio			3.13
Meter			8.32
SKF			10.00
All others			10.00
FAG	5/1/91-4/30/92	July 26, 1993(58 FR 39729)[2]	5.19
Meter			1.27
SKF			4.46
SNECMA			0.00
All others			155.57
FAG	5/1/92-4/30/93	February 28, 1995 (60 FR 10900)[3]	2.74
Meter			2.62
SKF			3.79
FAG	5/1/93-4/30/94	December 17, 1996 (61 FR 66472)[4]	1.79
Meter			3.75
SKF			3.26
FAG	5/1/94-4/30/95	January 15, 1997 (62 FR 2081)[5]	5.15
SKF			2.97
FAG[7]	5/1/95-4/30/96	October 17, 1997 (62 FR 54043)[6]	1.76
SKF[7]			3.59
FAG	5/1/96-4/30/97	June 18, 1998 (63 FR 33320)	1.18

Table BB-I-5--*Continued*
Results of administrative reviews relating to ball bearings from Italy

Producer/ exporter	Period of review	Date results published	Margin *(percent)*
SKF	5/1/96-4/30/97	June 18, 1998 (63 FR 33320)	3.61
Somecat			0.00
FAG[7]	5/1/97-4/30/98	July 1, 1999 (64 FR 35590)[6]	0.96
SKF[7]			3.42
Somecat			0.45
FAG	5/1/98-4/30/99	August 11, 2000 (65 FR 49221)	2.04
SKF			4.11
Somecat			0.15
Alfateam	5/1/99-4/30/00	July 12, 2001 (66 FR 36551)	68.29
Alfa-Team			68.29
Motion Bearings			68.29
Yoo Shin			68.29
DCD			68.29
FAG	5/1/00-4/30/01	August 30, 2002 (67 FR 55780)	1.42
SKF			3.70
Bearings Discount			68.29
Rodriguez			68.29
DCD			68.29
FAG	5/1/01-4/30/02	June 16, 2003 (68 FR 35623)	2.87
SKF			5.08
FAG	5/1/02-4/30/03	September 15, 2004 (69 FR 55574)	4.79
Ringball			3.45
SKF			1.38
([8])			68.29
FAG	5/1/03-4/30/04	September 16, 2005 (70 FR 54711)	5.88
SKF			2.59
FAG	5/1/04-4/30/05[9]	March 9, 2006 (71 FR 12170)	2.52
SKF			16.04

Continuation.

[1] Results of 1990-91 review were amended on July 24, 1992, December 14, 1992, and February 23, 1998.
[2] Results of 1991-92 review were amended on September 30, 1993, December 15, 1993, and April 16, 1998.
[3] Results of 1992-93 review were amended on March 31, 1995 and May 15, 1995.
[4] Results of 1993-94 review were amended on August 2, 1997 and November 15, 2000.
[5] Results of 1994-95 review were amended on March 26, 1997, June 25, 1997, and March 14, 2006.
[6] 69 FR 62023, October 22, 2004 (*Notice of Final Court Decision*).
[7] Commerce made a duty absorption finding in this instance.
[8] Rate determined for the following companies: Ace Bearing and Transmission Service, Aktif Endustrie Malzemeleri, Alphateam SPRL, Australian Bearing Pty Ltd, Baltic Bearing Supply, Bearing and Tool GmbH, Bearing Dynamics, Bearing Sales Corp., Budapesti Sved Csapagy Ltd, Cantoni and CSNC, CCVI Bearing Co., DCD Corp., Delta Export GmbH, EuroLatin Ex Services, Fair Friend Ent Co. Ltd, Friedrich Picard GmbH, Frohlich and Dorken GmbH, Han Sol Tech Corp./Yoo Shin Co., Hayley Import/Export, Heinz Knust, Hergenhan GmbH, Hoens Industrieel BV, IBD Ltd, International Bearing Pte Ltd, Italcuscinetti Group, Kian Ho Bearings Ltd, KIS Antriebs Technik GmbH, KSM, Minamiguchi/Bearing Manufacturing Co., LTM Industrietechnik, M Buchhalter Maschenmode/Hergenhan, Micaknowledge, Minetti SpA, Ming Hing Trading Co., Motion Bearing Pte Ltd, Rodamietos Rovi, Roeirasa, Rovi-Marcay, Rovi-Valencia, Taninaka Ltd, Top G Trading Pte Ltd, Weber Kugellager Int., Withus Technology Corp., and Wyko Export.
[9] Preliminary.

Source: USITC Publication 3309 (June 2000) and cited *Federal Register* notices from 2000 to date.

Table BB-I-6
Results of administrative reviews relating to ball bearings from Japan

Producer/ exporter	Period of review	Date results published	Margin *(percent)*
Asahi	11/9/88-4/30/90	July 11, 1991 (56 FR 31754)	45.83
Fujino Iron Works			2.67
Honda			2.19
IJK			17.58
Isuzu			0.90
Izumoto Seiko			8.50
Japanese Aero			106.61
Koyo			9.82
Minebea			106.61
Nachi			10.72
Nakai Bearing			12.62
Nankai Seiko			15.18
Nippon			45.83
NSK			6.33
NTN-Japan			14.23
Osaka			0.59
Showa			19.00
Takeshita			0.66
Tottori			5.70
Wada			23.88
Yamaha			0.08
All others			23.88
Asahi	5/1/90-4/30/91	June 24, 1992 57 FR (28360)[1]	0.01
FiatAvio			2.33
Fujino			1.80
Honda			0.04
IJK			8.26
Izumoto			12.18
Koyo			8.89
Minebea			106.61

Table BB-I-6--*Continued*
Results of administrative reviews relating to ball bearings from Japan

Producer/ exporter	Period of review	Date results published	Margin *(percent)*
Nachi	5/1/90-4/30/91	June 24, 1992 57 FR (28360)[1]	7.85
Nakai Bearing			6.36
Nankai Seiko			9.22
NPBS			45.83
NSK			7.22
NTN			2.24
Osaka Pump			0.89
Showa			7.31
Takeshita			0.84
Tottori			3.29
Uchiyama			45.83
Wada			16.71
Yamaha			45.83
All others			16.71
Asahi	5/1/91-4/30/92	July 26, 1993 58 FR (39729)[2]	0.50
Fujino			1.58
Honda			0.24
IJK			0.64
Izumoto			3.64
Koyo			7.55
Nachi			5.02
Nakai Bearing			6.17
Nankai Seiko			13.11
NPB			7.42
NSK			23.95
NTN			2.60
Osaka Pump			1.04
Showa			14.76
Takeshita			5.00
Torttori			0.80
All others			45.83

Table BB-I-6--*Continued*
Results of administrative reviews relating to ball bearings from Japan

Producer/ exporter	Period of review	Date results published	Margin *(percent)*
Honda	5/1/92-4/30/93	February 28, 1995 60 FR (10900)[3]	0.37
IKS			8.72
Koyo			39.56
Nachi			12.46
Nankai Seiko			1.06
NPBS			18.00
NSK			10.47
NTN			13.90
Takeshita			14.58
Asahi	5/1/93-4/30/94	December 17, 1996 (61 FR 66472)[4]	1.61
Izumoto			2.28
Koyo			14.90
Minamiguchi			106.61
Nachi			13.79
Naniwa			106.61
Nankai Seiko			0.55
Nichimen			106.61
NPBS			45.83
NSK			19.39
Nippon Thompson			10.16
Nissho			106.61
NTN			14.34
Origin Electric			106.61
Sanken			106.61
Taikoyo			106.61
Takeshita			0.89
THK			106.61
TOK Bearing			106.61
Tomen			106.61
Tsubakimoto			7.77

Table BB-I-6--*Continued*
Results of administrative reviews relating to ball bearings from Japan

Producer/ exporter	Period of review	Date results published	Margin *(percent)*
Asahi	5/1/94-4/30/95	January 15, 1997 (62 FR 2081)[5]	2.65
Koyo			18.90
NPB			45.83
NSK			12.81
NTN			4.01
Koyo[6]	5/1/95-4/30/96	October 17, 1997 (62 FR 54043)[7]	14.20
NPBS[6]			16.70
NSK[6]			6.65
NTN[6]			7.10
Nachi[6]			12.89
Koyo	5/1/96-4/30/97	June 18, 1998 (63 FR 33320)[8]	6.17
Nachi			3.37
NPBS			2.30
NSK			2.35
NTN			7.10
Koyo[6]	5/1/97-4/30/98	July 1, 1999 (64 FR 35590)[9]	7.23
Nachi[6]			4.33
NPBS[6]			1.20
NSK[6]			0.76
NTN[6]			6.13
Asahi	5/1/98-4/30/99	August 11, 2000 (65 FR 49221)[10]	0.67
IJK			12.80
IKS			9.99
Koyo			5.39
KYK			6.79
Nachi			4.62
Nakai Bearing			4.55
Nankai Seiko			0.33
NPBS			2.53
NSK			2.81

Table BB-I-6--*Continued*
Results of administrative reviews relating to ball bearings from Japan

Producer/ exporter	Period of review	Date results published	Margin *(percent)*
NTN	5/1/98-4/30/99	August 11, 2000 (65 FR 49221)[11]	6.14
Osaka Pump			19.58
Takeshita			19.58
Tsubaki			12.05
Koyo	5/1/99-4/30/00	July 12, 2001 (66 FR 36551)	10.10
NSK			4.22
NTN			9.16
Sapporo			73.55
Koyo	5/1/00-4/30/01	August 30, 2002 (67 FR 55780)[12]	7.70
NSK			6.07
NTN			9.72
Osaka Pump			0.98
Takeshita			2.88
Asahi			2.51
Isuzu			73.55
Nachi			10.33
Nankai Seiko			0.59
NPBS			3.42
Koyo	5/1/01-4/30-02	June 16, 2003 (68 FR 35623)[13]	4.98
NTN			4.51
NPBS			4.21
Sapporo			5.97
NSK			2.68
Asahi	5/1/02-4/30/03	September 15, 2004 (69 FR 55574)	0.23
Koyo			5.56
Nankai Seiko			0.46
NPBS			3.37
NSK			2.46
NTN			2.74
Osaka Pump			1.78

Table BB-I-6--*Continued*
Results of administrative reviews relating to ball bearings from Japan

Producer/ exporter	Period of review	Date results published	Margin *(percent)*
Sapporo	5/1/02-4/30/03	September 15, 2004 (69 FR 55574)	8.74
Takeshita			2.90
Asahi	5/1/03-4/30/04	September 16, 2005 (70 FR 54711)[14]	1.33
Koyo			12.78
NSK			8.25
NTN			5.93
Nankai Seiko			7.15
NPB			15.83
Osaka Pump			6.14
Sapporo			13.01
Takeshita			7.38
Koyo	5/1/04-4/30/05	March 9, 2006 (46 FR 12170)[15]	17.85
NSK			6.62
NTN			13.32
Nachi			28.33
NPB			25.91
Sapporo			9.01

[1] Results of 1990-91 review were amended on July 24, 1992, December 14, 1992, and February 23, 1998.
[2] Results of 1991-92 review were amended on September 30, 1993, December 15, 1993, and April 16, 1998.
[3] Results of 1992-93 review were amended on March 31, 1995, May 15, 1995, December 28, 2000, and February 23, 2001.
[4] Results of 1993-94 review were amended on August 2, 1997 and November 15, 2000. *See* also 70 FR 34447, June 14, 2005 (*Notice of Final Court Decision*).
[5] Results of 1994-95 review were amended on March 26, 1997 and June 25, 1997.
[6] Commerce made a duty absorption finding in this instance.
[7] 68 FR 23282, May 1, 2003 (*Notice of Final Court Decision*).
[8] Results of 1996-97 review were amended on October 5, 2005.
[9] 68 FR 43711, July 24, 2003 (*Notice of Final Court Decision*).
[10] 70 FR 41203, July 18, 2005 (*Notice of Final Court Decision*).
[11] Results of the 1998-99 review were amended on September 18, 2000.
[12] Results of the 2000-01 review were amended on October 15, 2002.
[13] Results of the 2001-02 review were amended on July 24, 2003.
[14] Results of the 2003-04 review were amended on October 21, 2005 and November 15, 2005.
[15] Preliminary.

Source: Cited *Federal Register* notices.

Table BB-I-7
Results of administrative reviews relating to ball bearings from Singapore

Producer/ exporter	Period of review	Date results published	Margin *(percent)*
NMB/Pelmec	11/9/88-4/30/90	July 11, 1991 (56 FR 31748)	4.85
All others			4.85
NMB/Pelmec	5/1/90-4/30/91	June 24, 1992 (57 FR 28360)[1]	4.51
All others			4.51
NMB/Pelmec	5/1/91-4/30/92	July 26, 1993(58 FR 39729)[2]	8.54
All others			25.08
NMB/Pelmec	5/1/92-4/30/93	February 28, 1995 (60 FR 10900)[3]	4.84
NMB/Pelmec	5/1/93-4/30/94	December 17, 1996 (61 FR 66472)[4]	12.47
NMB/Pelmec	5/1/94-4/30/95	January 15, 1997 (62 FR 2081)[5]	2.43
NMB/Pelmec[6]	5/1/95-4/30/96	October 17, 1997 (62 FR 54043)	2.10
NMB/Pelmec	5/1/96-4/30/97	June 18, 1998 (63 FR 33320)	5.33
NMB/Pelmec	5/1/98-4/30/99	August 11, 2000 (65 FR 49221)	1.26
NMB/Pelmec	5/1/01-4/30/02	June 16, 2003 (68 FR 35623)	1.62
NMB/Pelmec	5/1/02-4/30/03	September 15, 2004 (69 FR 55574)	1.94
NMB/Pelmec	5/1/03-4/30/04	September 16, 2005 (70 FR 54711)	3.56

[1] Results of 1990-91 review were amended on July 24, 1992, December 14, 1992, and February 23, 1998.
[2] Results of 1991-92 review were amended on September 30, 1993, December 15, 1993, and April 16, 1998.
[3] Results of 1992-93 review were amended on March 31, 1995 and May 15, 1995.
[4] Results of 1993-94 review were amended on August 2, 1997.
[5] Results of 1994-95 review were amended on March 26, 1997 and June 25, 1997.
[6] Commerce made a duty absorption finding in this instance.

Note.–Commerce rescinded its antidumping duty administrative reviews of ball bearings from Singapore for 2000-01 (67 FR 17361, April 10, 2002) and for 2004-05 (70 FR 61251, October 21, 2005).

Source: USITC Publication 3309 (June 2000) and cited *Federal Register* notices from 2000 to date.

Table BB-I-8
Results of administrative reviews relating to ball bearings from the United Kingdom

Producer/ exporter	Period of review	Date results published	Margin *(percent)*
Barden	11/9/88-4/30/90	July 11, 1991 (56 FR 31762)	14.73
Dowty Rotol			10.71
FAG UK			20.89
Pratt & Whitney			6.03
RHP			15.96
Rolls-Royce			2.74
SKF-UK			4.92
All others			20.89
Barden	5/1/90-4/30/91	June 24, 1992 (57 FR 28360)[1]	0.84
FAG UK			46.53
RHP			16.21
SKF			14.24
All others			46.53
Barden/FAG	5/1/91-4/30/92	July 26, 1993(58 FR 39729)[2]	8.90
All others			54.27
Barden	5/1/92-4/30/93	February 28, 1995 (60 FR 10900)[3]	4.86
RHP/NSK			14.57
Barden	5/1/93-4/30/94	December 17, 1996 (61 FR 66472)[4]	1.49
FAG			3.32
NSK/RHP			10.21
NSK-RHP	5/1/94-4/30/95	January 15, 1997 (62 FR 2081)[5]	20.25
Hoffman			61.14
Rose			61.14
NSK[7]	5/1/95-4/30/96	October 17, 1997 (62 FR 54043)[6]	**16.33**
Barden[7]			4.00
Barden	5/1/96-4/30/97	June 18, 1998 (63 FR 33320)[8]	6.63
NSK-RHP			17.14
SNFA			58.20
Barden[7]	5/1/97-4/30/98	July 1, 1999 (64 FR 35590)	2.89
NSK-RHP[7]			21.02

Table BB-I-8--*Continued*
Results of administrative reviews relating to ball bearings from the United Kingdom

Producer/ exporter	Period of review	Date results published	Margin *(percent)*
SNFA	5/1/97-4/30/98	July 1, 1999 (64 FR 35590)	0.00
Barden	5/1/98-4/30/99	August 11, 2000 (65 FR 49221)	1.28
SNFA			0.00
SNR			0.32
NSK/RHP	5/1/99-4/30/00	July 12, 2001 (66 FR 36551)	15.65
SNFA			0.00
Timken			1.11
NSK	5/1/00-4/30/01	August 30, 2002 (67 FR 55780)	16.87
Barden			3.87
Aeroengine Bearings	5/1/02-4/30/03	September 15, 2004 (69 FR 55574)	61.14
Barden/FAG			4.10
Barden/FAG	5/1/03-4/30/04	September 16, 2005 (70 FR 54711)	2.78
SKF			61.14
SKF	5/1/04-4/30/05	March 9, 2006 (71 FR 54711)[9]	0.23

[1] Results of 1990-91 review were amended on July 24, 1992, December 14, 1992, and February. 23, 1998.
[2] Results of 1991-92 review were amended on September 30, 1993, December 15, 1993, and April 16, 1998.
[3] Results of 1992-93 review were amended on March 31, 1995 and May 15, 1995.
[4] Results of 1993-94 review were amended on August 2, 1997, November 15, 2000, and December 19, 2000.
[5] Results of 1994-95 review were amended on March 26, 1997, June 25, 1997, and March 14, 2006.
[6] 69 FR 62023, October 22, 2004 (*Notice of Final Court Decision*).
[7] Commerce made a duty absorption finding in this instance.
[8] Results of the 1996-97 review were amended on May 3, 2005.
[9] Preliminary.

Note.–Commerce rescinded its antidumping duty administrative review of ball bearings from the United Kingdom for 2001-02 (67 FR 65089, October 23, 2002).

Source: USITC Publication 3309 (June 2000) and cited *Federal Register* notices from 2000 to date.

DISTRIBUTION OF CONTINUED DUMPING AND SUBSIDY OFFSET FUNDS TO AFFECTED DOMESTIC PRODUCERS

The CDSOA (also known as the Byrd Amendment) provides that assessed duties received pursuant to antidumping or countervailing duty orders must be distributed by Customs to affected domestic producers for certain qualifying expenditures that these producers incur after the issuance of such orders.[14] Table BB-I-9 presents CDSOA claims and disbursements for Federal fiscal years (October 1-September 30) 2001-05 relating to the ball bearing antidumping duty orders under review. During the

[14] Section 754 of the Tariff Act of 1930, as amended (19 U.S.C. § 1675(c)).

Table BB-I-9
Ball bearings: CDSOA claims and disbursements, Federal fiscal years 2001-05

Item	2001	2002	2003	2004	2005	2001-05	2001-05
	Value *($1,000 dollars)*						(*Percent*)
Amount of claim filed:[1]							
Emerson Power Transmission Corp./McGill Manufacturing Co.[2]	0	0	82,705	855,477	911,339	([3])	([3])
Kubar Bearings/Pacamor Kubar Bearings	34,200	37,612	41,410	44,957	49,502	([3])	([3])
MPB Corp.[4]	767,438	808,077	847,724	889,522	947,238	([3])	([3])
Torrington Company/The Timken Company[5]	1,669,917	1,729,813	1,771,696	1,812,158	1,858,594	([3])	([3])
Total	2,471,556	2,575,502	2,743,534	3,602,114	3,766,674	([3])	([3])
Amount disbursed:[6]							
By firm:							
Emerson Power Transmission Corp./McGill Manufacturing Co.[2]	0	0	1,570	11,552	16,323	29,446	8.9
Kubar Bearings/Pacamor Kubar Bearings	712	1,284	786	607	905	4,294	1.3
MPB Corp.[4]	22,965	27,586	16,096	12,012	17,076	95,735	29.0
Torrington Company/The Timken Company[5]	49,970	59,052	33,640	24,471	33,505	200,639	60.8
Total	73,647	87,923	52,093	48,643	67,808	330,114	100.0
By order:							
France	2,874	4,213	2,862	4,771	4,845	19,565	5.9
Germany	7,506	23,500	6,395	4,614	7,584	49,598	15.0
Italy	1,578	2,277	1,819	2,940	4,078	12,692	3.8
Japan	51,448	55,267	39,419	35,358	47,811	229,303	69.5
Singapore	6,871	51	62	70	429	7,484	2.3
United Kingdom	3,370	2,615	1,536	890	3,062	11,473	3.5
Total	73,647	87,923	52,093	48,643	67,808	330,114	100.0

[1] Qualifying expenditures incurred by domestic producers since the issuance of an order, as presented in Section I of Customs' CDSOA *Annual Reports.*
[2] McGill Manufacturing is owned by Emerson Power Transmission.
[3] Not applicable.
[4] MPB Corp. is a subsidiary of Timken and the firms are reported separately by Customs.
[5] Timken acquired Torrington in February 2003.
[6] Disbursements as presented in Section I of Customs' CDSOA *Annual Reports*.

Source: U.S. Customs and Border Protection's CDSOA *Annual Reports*. Retrieved at www.cbp.gov/xp/cgov/import/add_cvd/.

2001-05 period, approximately $2.5 billion to $3.8 billion of qualifying expenditures were claimed annually by seven U.S. producing entities, and approximately $330 million was disbursed by Customs to the firms during the period. Duties received under the order relating to imports of ball bearings from Japan accounted for almost 70 percent of duties disbursed under all the subject orders during the 2001-05 period.

THE SUBJECT PRODUCT

For purposes of these reviews, Commerce has generally defined BBs and parts thereof, whether mounted or unmounted, as antifriction bearings that employ balls as the rolling element.[15] Included in the scope are antifriction balls; inner and outer races; BBs with integral shafts; other BBs (including thrust, angular contact, and radial BBs) and parts thereof; ball bearing type pillow blocks and parts thereof; ball bearing type flange, take-up, cartridge, and hanger units and parts thereof; and wheel hub

---

[15] The antidumping duty orders for "ball bearings, mounted or unmounted, and parts thereof" for Germany, France, Italy, Japan, Singapore, and the United Kingdom published on May 15, 1989 (54 FR 20900, 54 FR 20902, 54 FR 20903, 54 FR 20904, 54 FR 20907, and 54 FR 20910) also indicated that "finished but unground or semiground balls are not included in the scope ..." The language for this exclusion was subsequently omitted from the scope definitions contained with Commerce's administrative reviews (*see*, for example, 56 FR 11178, March 15, 1991) and was not contained in the scope language used in Commerce's five-year sunset reviews of the antidumping duty orders for France, Germany, Italy, and the United Kingdom (70 FR 58183, October 5, 2005) or for Japan and Singapore (71 FR 26321, May 4, 2006). According to Commerce, unground ball bearings are excluded from the scope of the ball bearing orders. Staff telephone interview with ***, International Trade Administration, Commerce, April 26, 2006. Commerce provided a "recommendation memo - final scope ruling," dated May 18, 1992, to the Commission stating that finished semiground stainless steel balls imported from Italy are not within the scope of the antidumping duty orders on ball bearings (and cylindrical roller bearings). The ruling was requested by the IBC Bearing Co., Inc. (IBC). Commerce did not initiate a formal scope inquiry but indicated in the memorandum that descriptions of the subject merchandise contained in the petition, the initial investigations, and the antidumping duty orders were dispositive. According to Commerce (*see* above-reference telephone interview), the recommendation memorandum also supports the exclusion of all products referenced within the documents cited in the memorandum (i.e., for unground or semiground balls for the remaining subject orders). The domestic interested parties concur that unground ball bearings are not included within the scope of the ball bearing orders subject to these reviews. E-mail from counsel for the domestic parties, April 30, 2005. Respondents have not addressed the issue in their submissions to the Commission.

IBC is quoted in the recommendation memorandum (p. 4) as stating that unground ball bearings are the lowest grade of ball bearings and are used in file cabinets, slide drawers, patio doors, etc. They further clarified (ibid) that the balls they import are not the type that go into "precision ball bearings nor any other ball bearing needing finished ground balls." According to Basics of Engineering, "unground ball bearings may be wholly unground, ground in part, or wholly ground, but are characterized by precision levels less than ABEC 1. They are available in the traditional ball bearing forms to accommodate radial, thrust, and combined radial-thrust loads." Further, "low-carbon steels are employed widely; they are carburized and hardened to obtain enough wear resistance for good service under normal conditions. Certain applications require the corrosion resistance of stainless-steel or plated surfaces." Http://www.machinedesign.com/BDE/mechanical/bdemech6/bdemech6_50.html, retrieved May 25, 2006. The Current Industrial Report (CIR) Series (MA332Q) defines unground bearings (less than ABEC 1) as antifriction ball bearings with unground raceways (page 2). Http://www.census.gov/cir/www/instructions/ma332q.pdf, retrieved May 25, 2006. While the CIR Series appears to use the terms "ground or precision ball bearings" synonymously (page 1), "unprecision" bearings rated at ABEC 1 and above appear to be included within the scope of the orders. Telephone interview with counsel for NMB, May 25, 2006.

U.S. firms that appear to produce only unground bearings include *** (*see* cover letter to the ***) and *** (staff telephone interview with ***), January 1, 2006. ***. According to the CIR for antifriction bearings (2004), unground ball bearings (less than ABEC 1) and all unground thrust ball bearings consisted of 43 percent of total quantity of U.S. shipments of ball bearings in 2004 and 6 percent of the total value of U.S. shipments.

units incorporating balls as the rolling element. All finished parts are included within the scope of the reviews; however, unfinished parts are included only if they have been heat-treated, or if heat treatment is not required to be performed on the part. Thus, the only unfinished parts that are not covered by these orders are those that will be submitted to heat treatment after importation. The ultimate application of a bearing also does not influence whether the bearing is covered by the orders. Bearings designed for highly specialized applications are not excluded. Any of the subject BBs, regardless of whether they may ultimately be utilized in aircraft, automobiles, or other equipment, are within the scope of these orders.

The subject BBs and parts for BBs are primarily classified under the following HTS subheadings: 8482.10.10, 8482.10.50, 8482.80.00, 8482.91.00, 8482.99.05, 8482.99.35, 8483.20.40, and 8483.20.80. Additional parts, products that contain BBs, and items that were included as a result of scope determinations following the original investigations[16] may also be classified under HTS subheadings 3926.90.45, 4016.93.10, 4016.93.50, 6909.19.5010, 8431.20.00, 8431.39.0010, 8482.99.2580, 8482.99.6595, 8483.50.8040, 8483.50.90, 8483.90.20, 8483.90.30, 8483.90.70, 8708.50.50, 8708.60.50, 8708.60.80, 8708.93.30, 8708.93.60, 8708.9375, 8708.9906, 8708.99.31, 8708.99.4960, 8708.99.58, 8708.99.8080, 8803.10.00, 8803.20.00, 8803.30.00, 8803.90.30, and 8803.90.90.[17]

Ball bearings are often preferred over roller bearings when speed is a more important factor than load-carrying capacity. They can withstand fairly high speeds because there is less contact between the rolling balls and the inner and outer rings than there would be with a roller bearing. BBs are designed to carry radial or thrust loads, or a combination of the two. BBs are categorized based on a number of geometric configurations including single row, double row, self-aligning, and angular contact.

U.S. Tariff Treatment

The general rates of duty for assembled ball bearings with integral shafts and for ball bearings without integral shafts are 2.4 percent and 9.0 percent *ad valorem*, respectively. Imports of combination bearings containing balls receive a general duty rate of 5.8 percent *ad valorem*, while such tariff rates for balls, inner and outer races, and other parts for ball bearings range from 4.4 percent to 9.9 percent *ad valorem*, as set forth in the rates of duty column 1-general. Housed ball bearings are subject to a general duty rate of 4.5 percent *ad valorem*. The duty rates are not scheduled for further reductions. The current column 1-general rates of duty for additional parts, products containing ball bearings, and those items included as a result of scope determinations range from free to 5.5 percent *ad valorem*.

DOMESTIC LIKE PRODUCT ISSUES

The Commission found six like products in its final determinations in the original investigations concerning antifriction bearings, other than tapered roller bearings, and parts thereof. Each product category was divided according to the type of rolling element employed, with ball bearings constituting one of the six separate like products.[18] As noted in the Commission's preliminary determinations in those investigations, each like product definition included "parts and components dedicated for use in the

[16] A description of scope rulings issued by Commerce, including a list of specific products covered and excluded under the orders on antifriction bearings other than TRBs, is presented in app. E.

[17] 71 FR 26321, May 4, 2006.

[18] Negative determinations were reached with respect to SRBs, NRBs, and SRs. *Antifriction Bearings (Other than Tapered Roller Bearings) and Parts Thereof from the Federal Republic of Germany, France, Italy, Japan, Romania, Singapore, Sweden, Thailand, and the United Kingdom*, Investigations Nos. 303-TA-19 and 20 (Final) and 731-TA-391 through 399 (Final), USITC Publication 2185, May 1989, pp. 1-5 and 12-18, 33.

particular type of bearing, finished and unfinished bearings, and housed and mounted bearings containing the specified rolling element."[19] In its first five-year review determinations, the Commission found that TRBs, BBs, CRBs, and SPBs were separate domestic like products consistent with Commerce's scope definitions.[20]

For purposes of the notice instituting the current five-year reviews, the parties were instructed to report information on three domestic industries, each devoted to the production of one of the following three domestic like products: (1) BBs, (2) SPBs, and (3) TRBs. The domestic interested parties as well as INA, Nachi-Fujikoshi, Nachi Technology, Nachi America, NMB/Pelmec, NSK, and NTN indicated in their responses to the Commission's notice of institution in these reviews that they agreed with the Commission's definitions of domestic like products and domestic industries as consisting of (1) BBs, (2) SPBs, and (3) TRBs.[21] Similarly, the domestic interested parties as well as JBIA, Schaeffler, and SKF indicated in their prehearing briefs that they also supported the Commission's definition of domestic like products.[22]

Physical Characteristics and Uses

Ball bearings consist of an outer race, an inner race, and a series of balls fitted into openings in a separator or cage (figure BB-I-2). Such bearings are capable of handling relatively light loads, which may be either radial or thrust loads, and high speeds. The highest speeds are withstood by deep groove ball bearings carrying a radial load, or angular contact ball bearings carrying combined loads. Widely used in a number of industries and applications, major end markets for BBs include the agricultural, mining, construction, aerospace, automotive, consumer durables, and oil sectors. According to data

---

[19] *Antifriction Bearings (Other than Tapered Roller Bearings) and Parts Thereof from the Federal Republic of Germany, France, Italy, Japan, Romania, Singapore, Sweden, Thailand, and the United Kingdom*, Investigations Nos. 303-TA-19 and 20 (Preliminary) and 731-TA-391 through 399 (Preliminary), USITC Publication 2083, May 1988, p. 22.

[20] *Certain Bearings From China, France, Germany, Hungary, Italy, Japan, Romania, Singapore, Sweden, and the United Kingdom, Investigations Nos. AA1921-143, 731-TA-341, 731-TA-343-345, 731-TA-391-397, and 731-TA-399 (Review)*, USITC Publication 3309, June 2000, p. 12. As noted earlier, the Commission subsequently reached negative determinations with respect to the outstanding orders on CRBs.

[21] Caterpillar indicated that it did not challenge the Commission's definitions and Koyo (JTEKT) indicated that it took no position on the Commission's definitions. No other interested parties responding to the Commission's notice of institution provided any comments concerning the Commission's definitions.

[22] Domestic interested parties' prehearing brief, p. 1; JBIA's prehearing brief, p. 5; Schaeffler's prehearing brief, p. 3; and SKF's prehearing brief, p. 2.

collected in response to Commission questionnaires, the majority of U.S. and foreign producers and U.S. importers claim that there have not been any changes in the end uses of certain BBs since the first reviews, and no changes in end uses are expected in the future.[23]

As discussed in the *Overview* section, the parties to the reviews hold diverse views on the issue of custom vs. standard bearings. The domestic interested parties assert that the definition of a "custom" bearing leads to subjective reporting that does not lend itself as a good indicator of competitionbetween domestic and imported BBs.[24] In sum, domestic interested parties argue that "most bearing manufacturers" produce, sell and compete both custom and standard bearings and that such bearings are sold in all sectors of the OEM market.[25] Respondent SKF argues that product differentiation is an important condition of competition as the BB industry does not fit the classical commodity paradigm.[26] SKF states in its posthearing brief that the record demonstrates that BBs in the U.S. market are becoming less commodity-like claiming there is a trend away from catalog, off-the-shelf products to more highly engineered, tailor-made products.[27] JBIA states that custom ball bearings are unique to specific customer applications and are not interchangeable with other custom ball bearings. Moreover, many never become standardized.[28] JBIA also points out that BB models sold in the aftermarket are standardized to a greater degree.[29]

Figure BB-I-2.–Ball bearing

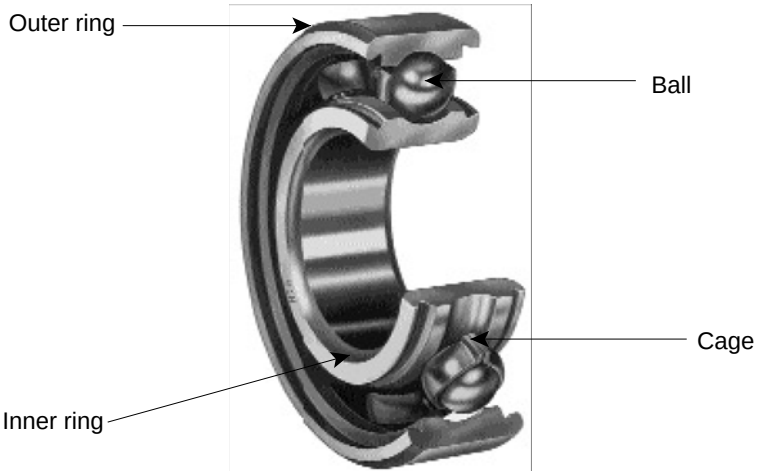

Source: NTN America.

The terms may also take on different meanings for individual companies. For example, one U.S. purchaser refers to its ***.[30] Furthermore, JBIA distinguishes between less-technical custom BBs and more-technical custom BBs, and aggregates less-technical custom BBs with standard BBs.[31] The domestic interested parties state that in the original investigation and first sunset review, "the Commission

---

[23] ***, however, has observed an "increase in the development and use of BBs in hi-tech and extreme environment applications, and in sophisticated automotive hub units." *** producer questionnaire response, question IV-B-11.

[24] Domestic interested parties' exhibits to its prehearing brief, section B8, pp. 5-6.

[25] Domestic interested parties' posthearing brief, p. Lane 32.

[26] SKF's prehearing brief, p. 7.

[27] Specifically, SKF cites a 2004 report by the International Organization for Standardization that states "{v}ery few new bearings are standardized" to contradict the claim that "the industry regularly converts this year's custom products to next year's standard products." SKF's posthearing brief, pp. 5-6.

[28] JBIA's posthearing brief, pp. 1-2.

[29] JBIA's posthearing brief, exh. 1, p. 52.

[30] JBIA's posthearing brief, exh. 10, p. 3.

[31] JBIA's posthearing brief, p. 2.

has always viewed ball bearings as a continuum," and that the competitive conditions of the first reviews exist today.[32]

As reported in response to Commission questionnaires, substantial proportions of BBs are sold as both standard and customized product in the United States by U.S. producers and subject importers.[33] The following tabulation presents the shares of the value of shipments in 2005 of standard and custom BBs, by source:

Item	U.S.	France	Germany	Italy	Japan	Singapore	UK	Total subject
Share of value (*percent*)								
Standard bearings	33.1[1]	***	63.4	***	48.8	***	***	54.7
Custom bearings	66.9[1]	***	36.6	***	51.2	***[2]	***[3]	45.3

[1] SKF indicates in its posthearing brief that the "ratio of custom to standard undoubtedly would be substantially higher, if *** were included in the mix." SKF's posthearing brief, p. 4.
[2] Domestic interested parties argue in their posthearing brief that ***. Domestic interested parties' posthearing brief, pp. Hillman 10-14. Domestic interested parties further claim to have obtained a "custom" miniature ball bearing from NMB Singapore that is identical to an NMB catalog (standard) bearing and noted that ***. Domestic parties' posthearing brief, p. Hillman 12. They also object to the use of the term "special" by NMB/Pelmec to describe standard bearings that have minor modifications to meet customer requirements. Domestic parties' posthearing brief, Hillman exhibit 6.
[3] Data reported as custom bearings for one firm (***) may include a small share of off-the-shelf standard bearings.

The majority of BBs produced domestically met the definition used for a custom bearing. Relatively more standard bearings, in contrast, were imported from countries subject to the antidumping duty orders although there was some variation among sources. *** of the subject BBs imported from France and Italy met the definition of a standard bearing while *** of the subject BBs imported from Singapore were reported to be custom bearings.

Table BB I-10 presents the shares of shipments, by source, for a series of end-use categories for both standard and custom bearings.[34] Both U.S. producers and subject sources generally reported shipping bearings in most of the individual end-use categories.[35]

[32] Domestic interested parties' posthearing brief, p. 10.

[33] *See* the notes to table BB I-10 for the definitions of standard and customs used in Commission questionnaires. The definitions of standard and custom bearings are based on proposals by respondent interested parties in the first and second set of comments on the draft questionnaires circulated by Commission staff. *See* staff e-mail, dated November 11, 2005, where parties were requested to comment on whether the terms standard and custom bearings were clearly demarcated in the industry.

[34] JBIA indicated in its prehearing brief that competition between U.S. BB companies is also distinct by the production of custom vs. standard BBs within various industry sectors (i.e., automotive, industrial machinery, and aftermarket). JBIA's prehearing brief, p. 15.

[35] As noted, there were *** U.S. shipments reported of standard bearings from Singapore.

Table BB- I-10
Ball bearings: U.S. shipments, by standard and custom and by end-use categories, 2005[1]

Item	U.S. shipments of--							
	U.S. producers	Subject imports[2]						
		France	Germany	Italy	Japan	Singapore	UK	Total subject
	Share of value (*percent*)							
Standard bearings:								
OEM - agriculture, construction mining	5.5	***	1.0	***	14.7	***	***	10.9
OEM - metalworking machinery	1.2	***	1.6	***	2.4	***	***	3.5
OEM - other general purpose machinery and equipment	8.1	***	28.9	***	14.8	***	***	14.6
OEM - automotive (including parts)	19.2	***	1.1	***	9.9	***	***	8.2
OEM - aerospace (including parts)	0.4	***	8.7	***	0.6	***	***	1.7
OEM - all other	17.1	***	0.9	***	2.8	***	***	2.6
Subtotal OEM	51.5	***	42.2	***	45.2	***	***	41.6
AM - automotive (including parts) and supply merchant wholesalers	1.4	***	0.4	***	23.1	***	***	16.3
AM - machinery, equipment and supply merchant wholesalers	18.6	***	39.9	***	25.8	***	***	35.1
AM - all other	28.5	***	17.6	***	5.8	***	***	7.0
Subtotal AM (aftermarket)	48.5	***	57.8	***	54.8	***	***	58.4
Total standard bearings	100.0	0	100.0	0	100.0	***	0	100.0
Custom bearings:								
OEM - agriculture, construction mining	2.0	***	3.6	***	12.0	***	***	10.5
OEM - metalworking machinery	0.2	***	0.1	***	2.9	***	***	2.6
OEM - other general purpose machinery and equipment	1.8	***	5.4	***	9.2	***	***	8.2
OEM - automotive (including parts)	62.2	***	32.0	***	44.9	***	***	42.3
OEM - aerospace (including parts)	15.3	***	2.8	***	0.2	***	***	3.8
OEM - all other	6.9	***	17.4	***	14.5	***	***	14.6
Subtotal OEM	88.4	***	61.3	***	83.8	***	***	82.1
AM - automotive (including parts) and supply merchant wholesalers	7.8	***	13.0	***	11.2	***	***	10.6
AM - machinery, equipment and supply merchant wholesalers	0.5	***	11.1	***	4.7	***	***	5.4
AM - all other	3.3	***	14.6	***	0.3	***	***	1.9
Subtotal AM (aftermarket)	11.6	***	38.7	***	16.2	***	***	17.9
Total custom bearings	100.0	0	100.0	0	100.0	0	0	100.0

Notes on next page.

Continuation.

[1] These data are for complete bearings and exclude parts.
[2] These data are adjusted to reflect both the revocation of the BB orders on SNFA France (France), Paul Mueller (Germany), Somecat (Italy), Honda (Japan), and SNFA UK (UK) and nonsubject product.

Note.–Custom bearings were defined in the Commission questionnaires as those that (1) have a non-catalog number; (2) have a specific drawing number; (3) have a customer-specific part number; or (4) have been otherwise manufactured to a customer's specific order. Standard bearings are all other "off the shelf" bearings. OEM refers to original equipment manufacturers and AM refers to the aftermarket.

Source: Compiled from data submitted in response to Commission questionnaires.

Manufacturing Process

Ball bearings are fabricated using essentially the same processes used in the manufacture of other antifriction bearings, described in the section entitled *The Product* in the *Introduction and General Overview* of this report. However, in the green machining process for ball bearings, coiled alloy wire is fed into a cold heading machine, cut into blanks, and pressed into balls between hemispherical dies. These balls, which are then heat treated, ground, and finished to the correct dimensions, shape, and outside surface, constitute the rolling elements in all types of ball bearings. After inspection, the balls are packed for shipment or incorporation in the assembly process. In response to questionnaires, foreign producers largely indicated that there have been no significant changes in production technology for certain BBs since the first reviews.

BBs are produced either in batches or on automated production lines. With batch production, a large number of different BBs are produced in comparatively small quantities, whereas automated lines yield large numbers of relatively fewer BB types. Product switching for automated lines is prohibitively expensive, unlike for batch production.[36] JBIA explains that BB production in low-cost, nonsubject countries may be less automated. In these countries, lower cost labor may be substituted for an expensive, highly automated production line to reduce investment costs.[37] In response to questionnaires, foreign producers largely indicated that there have been no significant changes in production technology for certain BBs since the first reviews.

The Commission noted in its 1989 determinations that many producers make only one type of bearing while those larger producers that produce several types of bearings routinely rationalize their production of antifriction bearings by the type of rolling element employed. The Commission found, "{f}or each rolling element, a separate manufacturing facility is generally utilized."[38] BBs continue to be generally produced on dedicated machinery, and a producer cannot switch production of BBs to other types of bearings without reconfiguration of production lines, which adds to costs. Questionnaire data indicate that the majority of U.S. and foreign producers have not, and do not anticipate, producing other products on their equipment and machinery and/or with the same production workers manufacturing certain BBs. Similarly, U.S. and foreign producers largely stated that their firms were unable to switch

[36] Domestic interested parties' posthearing brief, exh. 1, p. 18.

[37] JBIA's posthearing brief, p. 14.

[38] *Antifriction Bearings (Other than Tapered Roller Bearings) and Parts Thereof from the Federal Republic of Germany, France, Italy, Japan, Romania, Singapore, Sweden, Thailand, and the United Kingdom*, Investigations Nos. 303-TA-19 and 20 (Final) and 731-TA-391 through 399 (Final), USITC Publication 2185, May 1989, p. 17.

production between certain BBs and other products in response to relative price changes between products.[39]

Interchangeability and Customer and Producer Perceptions

While a majority of responding producers, importers, and purchasers stated that U.S. and subject country BBs were always or frequently interchangeable, others did raise issues such as different countries producing different proportions of custom versus standard BBs as being barriers to interchangeability. Domestic interested parties claim that "where you're talking about the world's largest producers and the most sophisticated producing companies other than people here in the United States that that product (bearings) is highly interchangeable."[40] They also point to the presence of numerous identical part numbers in U.S. and foreign producer catalogs as evidence of bearing interchangeability.[41] However, NSK states that "the opportunities for an interchangeable supply of products across regions are few and far between, because of the local demands and expectations established by our customers."[42] The responding parties also allege that the vast majority of ball bearings produced for the automotive OEM sector are not interchangeable.[43] In support of that contention, Delphi claims that "if the bearings have not been made to Delphi's specification, they are not interchangeable. If the bearings have not been through Delphi's stringent qualification process, they are not interchangeable."[44] *See* Part II of this chapter for a complete discussion of product interchangeability.

Channels of Distribution

Both domestically produced and subject imports, in aggregate, are sold predominantly to end users/OEMs. According to questionnaire data, U.S. producers shipped 89.5 percent of their U.S. shipments of BBs to end users/OEMs in 2005, and the remaining 10.5 percent to distributors/aftermarket customers (table BB I-11).[45] By comparison, subject importers shipped 82.5 percent of their U.S. shipments of BBs to end users/OEMs in 2005 and the remaining 17.5 percent to distributors/aftermarket customers. Relative shares of end user/OEM and distributor/aftermarket shipments, however, differed somewhat for the countries subject to the orders. The vast majority of subject BBs imported from ***, ***, and the *** were shipped to end users/OEMs. In contrast, one-third to more than one-half of subject imports of BBs from ***, ***, and *** were shipped into the aftermarket.

---

[39] *** noted that, as the need arises, workers may be "called on to work on the production line for a different product if necessary," within the same plant. However, *** does not produce other products on the same equipment or machinery. *** producer questionnaire response, question II-6. *** uses the same approach for its production of certain BBs in Japan. *** foreign producer questionnaire response, question II-7. *** produces cylindrical roller bearings on some of the same equipment, using some of the same labor force, as that used to manufacture ball bearings. *** producer questionnaire response, question II-6. *** stated that its plants producing bearings less than 8 inches in outside diameter do not have the ability to shift production to other bearing types without significant cost inefficiencies that would make such a switch impractical. However, for its large bearings (greater than 8 inches in outside diameter), it is possible to produce other bearing types (i.e., cylindrical and spherical roller bearings) using the same equipment and labor. *** producer questionnaire response, question II-8.

[40] Hearing transcript, p. 91 (Stewart).

[41] Domestic interested parties' posthearing brief, exh. Koplan 7.

[42] Hearing transcript, p. 206 (Rouse).

[43] Hearing transcript, p. 217 (Button).

[44] Hearing transcript, p. 251 (Holder).

[45] "Buy-American" sales were insignificant throughout the period examined.

Table BB I-11
Ball bearings: Channels of distribution, 2000-05[1]

Item	2000	2001	2002	2003	2004	2005
	Share of quantity (*percent*)					
U.S. producers:						
End users/OEMs not as a Buy America sale	***	***	***	***	***	***
End users/OEM as a Buy America sale	***	***	***	***	***	***
Total (endusers/OEMs)	91.6	91.1	91.0	91.1	91.3	89.5
Distributors/aftermarket not as a Buy America sale	***	***	***	***	***	***
Distributors/aftermarket as a Buy America sale	***	***	***	***	***	***
Total (distributors/aftermarket)	8.4	8.9	9.0	8.9	8.7	10.5
Imports from France (subject):						
End users/OEMs	***	***	***	***	***	***
Distributors/aftermarket	***	***	***	***	***	***
Imports from Germany (subject):						
End users/OEMs	77.0	77.6	73.5	73.3	75.7	73.0
Distributors/aftermarket	23.0	22.4	26.5	26.7	24.3	27.0
Imports from Italy (subject):						
End users/OEMs	***	***	***	***	***	***
Distributors/aftermarket	***	***	***	***	***	***
Imports from Japan (subject):						
End users/OEMs	82.2	82.1	82.8	81.5	83.4	83.1
Distributors/aftermarket	17.8	17.9	17.2	18.5	16.6	16.9
Imports from Singapore (subject):						
End users/OEMs	***	***	***	***	***	***
Distributors/aftermarket	***	***	***	***	***	***
Imports from the United Kingdom (subject):						
End users/OEMs	***	***	***	***	***	***
Distributors/aftermarket	***	***	***	***	***	***
Imports from all subject sources:						
End users/OEMs	90.6	90.5	89.6	86.0	86.2	82.5
Distributors/aftermarket	9.4	9.5	10.4	14.0	13.8	17.5

Notes on next page.

Continuation.

[1] These data are for complete bearings and exclude parts.

Note.–***. The import data are adjusted to reflect both the revocation of the BB orders on SNFA France (France), Paul Mueller (Germany), Somecat (Italy), Honda (Japan), and SNFA UK (UK) and nonsubject product.

Source: Compiled from data submitted in response to Commission questionnaires.

Price

Price competition in the global bearing industry historically has been reported as intense, particularly with respect to commodity-type bearings.[46] However, as noted earlier, SKF argues in its prehearing brief that while "*certain* categories of BBs have standard physical specifications and are "commodity-like" in terms of pricing, the vast universe of BB products is highly heterogenous."[47] Domestic interested parties refer to prices in the United States as "less depressed than in other markets due to the orders."[48] They also report that for 103 identical ball bearing part numbers sold in leading world aftermarkets, U.S. prices were higher in the majority of comparisons.[49] JBIA claims that if BBs are interchangeable, however, then there would be a single world price for each bearing model. Moreover, JBIA alleges that if the U.S. price is higher for an identical BB, it is because U.S. customers find value in sourcing locally.[50]

Pricing information in the record is mixed. Many foreign producers indicated in their questionnaire responses that price comparisons between certain BBs sold in home, U.S., and third-country markets were not possible because of the differences in product mix between the markets. Other foreign producers noted a wide range of price experiences.

U.S. MARKET PARTICIPANTS

U.S. Producers

Twenty-one firms provided questionnaire data on their production of BBs and parts of BBs in the current five-year reviews, down from the 36 firms that reported data for the period covered in the first five-year reviews. In addition to the firm consolidation described in the overview to this report, two firms (specifically, American Roller Bearing Industries, Inc. and Nucor Bearing Products) have indicated that they are no longer manufacturing BBs in the United States. Delphi Automotive Systems, NSK, SKF, and Timken accounted for over one-half (specifically, *** percent) of the value of reported U.S. shipments of BBs and parts in 2005.[51] All of the above producers, with the exception of Delphi, are affiliated with bearing production facilities outside the United States. Table BB-I-12 presents data on BB

---

[46] The McGraw-Hill Companies and the U.S. Department of Commerce, International Trade Administration, *U.S. Industry & Trade Outlook '99* (Ohio: McGraw Hill, 1999), p. 15-8.

[47] SKF's prehearing brief, p. 6. *See also* earlier cited comments of the domestic interested parties that emphasize the commodity nature of BBs.

[48] Hearing transcript, p. 15 (Stewart).

[49] Domestic interested parties' posthearing brief, p. Lane 2.

[50] JBIA's posthearing brief, p. 9.

[51] In the staff report for the first five-year reviews, NTN, Delphi, SKF, Torrington, and NSK were described as accounting for over *** percent of U.S. shipments of BBs and parts in 1998. Confidential staff report INV-X-101 (May 8, 2000), p. BB-I-35.

Table BB-I-12
Ball bearings: U.S. producers' positions on continuation of the order, shares of the value of reported U.S. shipments in 2005, locations of production facilities, parent firm(s), and related foreign producer(s)

Firm	Position on continuation of the order	Share of the value of reported U.S. shipments *(percent)*	Parent firm(s)	Related BB foreign producer(s)
Atlantic Bearing Co., Inc.	***	***	None	None
Delphi Automotive Systems LLC	***	***	None	Delphi Automotive Systems Espana S.A. (Spain)
Emerson Power Transmission Corp. (McGill Manufacturing Co.; Rollway Bearing International LTD.; Emerson Chain, Inc.; Emerson Power Transmission Drives & Components, Inc.)	Support	***	Emerson Electric (St. Louis, MO)	Transmissions de Pontencia Emerson (Mexico)
Hoover Precision Products, Inc.	***	***	Tsubaki Nakashima Co., Ltd. (Japan)	None
Koyo Corp. of USA	Oppose	***	JTEKT Corp. (Japan)	Japan (3 plants) China: Koyo Nidec (Dalian) Precision Bearings Co., Ltd. (China); Wuxi Koyo Bearing Co. Ltd. (China); Dalian Koyo Wazhou Automobile Bearing Co., Ltd. (China); Koyo Bearing Dalian Co. Ltd., (China); Koyo Automotive Parts (Wuxi) Co., Ltd. (China); Koyo Lioho (Foshan) Automotive Parts Co., Ltd. (China; automotive wheel bearings) Other: Koyo Bearings (Europe) Ltd. (UK); Koyo Romania S.A. (Romania); Koyo Manufacturing (Phillippines) Corp.
Nachi Technology, Inc.	Oppose	***	Nachi America (Macomb, MI) Nachi-Fujikoshi Corp. (Japan) is the ultimate parent	Asia: Nachi-Fujikoshi Corp. (Japan); Nachi Technology (Thailand) Co., Ltd. (Thailand); Nachi C.Y. Corp. (Taiwan); Shanghai Nachi Bearings Co., Ltd. (China); Dongguan Nachi C.Y. Corp. (China) Other: Nachi Brasil (Brazil); Nachi Industrial (Spain); Nachi Czech s.r.o. (Czech Republic)

Table continued on next page.

Table BB-I-12–*Continued*
Ball bearings: U.S. producers' positions on revocation, shares of the value of reported U.S. shipments in 2005, locations of production facilities, parent firm(s), and related foreign producer(s)

Firm	Position on continua-tion of the order	Share of the value of reported U.S. shipments *(percent)*	Parent firm(s)	Related BB foreign producer(s)
Nakanishi Mfg. Corp.	***	***	Nakanishi Metal Works Co., Ltd. (Japan)	Nakanishi Metal Works (Japan); NKC Mfg. Philippines Corp.; Nakanishi Manufacturing Wuxi Corp. (China)
New Hampshire Ball Bearings, Inc.	***	***	NMB (USA), Inc. (Chatsworth, CA), holding company for Minebea (Japan)	Minebea maintains factories in China, Japan, Singapore, and Thailand
NN, Inc.	***	***	None	None
NSK Corp.	Oppose	***	NSK Ltd. (Ann Arbor, MI), which is ***-owned by NSK Corp. (Japan)	Europe: NSK Europe (UK); AKS Precision (UK); Aeroengine Bearings (UK); NSK Iskra S.A. (Poland); Neuweg Fertigung (Germany) Japan: NSK; NSK Precision; NSK Fukushima; ASK East Japan; Chitose Sangyo; Asahi Seiko; Shinwa Seiko; Amatsuji; Yagi Kogyo; Kuribayashi Seisakusho; Kokoku Seiko; Nomura Tekkosho; Komei; Nakanishi Metal Works; NSK Micro Precision; Inoue Jikuuke Kogyo Other Asia: P.T. NSK Bearings Mfg. (Indonesia); P.T. AKS Precision Ball Indonesia; NSK Bearings Manufacturing (Thailand); Kunshan NSK Co., Ltd. (China); Guizhou HS NSK Bearings Co., Ltd. (China); NSK Korea Co., Ltd.; NSK Micro Precision Sdn. Bhd. (Malaysia) South America: NSK Brasil Ltda. (Brazil)
NSK-AKS Precision Ball Co.	***	***	Amatsuji Steel Ball Mfg. Co. (Japan)–*** NSK Ltd. (Japan)–***	*See* above listing for NSK Corp.

Table continued on next page.

Table BB-I-12--*Continued*
Ball bearings: U.S. producers' positions on revocation, shares of the value of reported U.S. shipments in 2005, locations of production facilities, parent firm(s), and related foreign producer(s)

Firm	Position on continuation of the order	Share of the value of reported U.S. shipments *(percent)*	Parent firm(s)	Related BB foreign producer(s)
NTN-USA Corp. (American NTN Bearing Manufacturing Corp., NTN-BCA, and NTN Bower Corp.)	Oppose	***	NTN Corp. (Japan)	Asia: NTN Corp. (Japan); Tung Bei Industrial Co., Ltd. (Taiwan); Shanghai Tung Pei Enterprise Co., Ltd. (China); Shanghai NTN Corp. (China); Changzhou NTN-Guangyang Corp. (China); NTN Manufacturing (Thailand) Co., Ltd. (Thailand) Other: NTN Bearing Mfg. Canada; NTN Kugellagerfabrik (Deutschland), GmbH (Germany)
Pacamor/ Kubar Bearings	Support	***	None	None
Rexnord Bearing Group (Link-Belt Bearing)	Support	***	Rexnord (Milwaukee, WI)	None
Rockwell Automation Power Systems (Dodge)	***	***	Rockwell Automation (Milwaukee, WI)	None
Saint-Gobain Ceramics & Plastics, Inc./Norton Advanced Ceramics	***	***	Saint-Gobain Corp. (France)	None
Schaeffler Group (Barden, FAG Automotive, FAG Industrial, Winsted Precision Ball)	Oppose	***	Schaeffler Germany	Germany: Schaeffler KG (5 entities) Other Europe: Schaeffler France Usine Roulement (France); WPB Water Pump Bearing GmbH & Co. KG (Italy); INA Kysuce, a.s. (Slovak Republic); INA Skalica spol. S.r.o. (Slovak Republic); FAG Components Hungary Kft. (Hungary); ROL Rolamentos Portugueses S.A. (Portugal); The Barden Corp. (U.K.) Ltd. (UK) Asia: Schaeffler (China) Co., Ltd. (China); Schaeffler Ansan Corp. (Korea); FAG Bearings Korea Corp. (Korea) Other: Schaeffler Brasil Ltda. (Brazil); Schaeffler Canada, Inc. (Canada); Rolamentos FAG Ltda. (Brazil); FAG Bearings India Ltd. (India)

Table continued on next page.

Table BB-I-12--*Continued*
Ball bearings: U.S. producers' positions on revocation, shares of the value of U.S. shipments in 2005, locations of production facilities, parent firm(s), and related foreign producer(s)

Firm	Position on continu-ation	Share of the value of reported U.S. shipments *(percent)*	Parent firm(s)	Related BB foreign producer(s)
SKF USA	Oppose	***	AB SKF (Sweden)	Europe: SKF Sverige AB (Sweden); SKF Osterreich AG (Austria); SKF Espanola S.A. (Spain); SKF Poznan S.A. (Poland); SKF Bearings Bulgaria EAD (Bulgaria); SKF (U.K.) Ltd.; SKF Aeroengine UK; SKF GmbH (Germany); SKF Industrie (Italy); SKF France S.A.; SKF Aerospace France Other: SKF do Brasil Limitada (Brazil); SKF Argentina S.A. (Argentina); SKF India Ltd. (India); SKF Automotive Components Corp. (Korea); PT. SKF Indonesia; SKF de Mexico S.A. de C.V. (Mexico); SKF Bearings Industries (Malaysia); SKF South Africa
The Timken Co. (Timken U.S. Corp., and MPB Corp.)	Support	***	Timken U.S. Corp. (Torrington, CT) and MPB Corp. (Keene, NH) are wholly-owned subsidiaries of The Timken Co. (Canton, OH)	Subject countries: Timken France; Timken Germany; Timken UK Other: Wuxi plant (China); Olomouc plant (Czech Republic); Bilbao plant (Spain); Medemblik plant (Netherlands); Ploiesti plant (Romania)
Triangle Mfg. Co.	***	***	None	None
Trostel, Inc.	***	***	Albert Trostel & Sons (Milwaukee, WI)	None
Total	--	100.0	--	--

[1] Less than 0.05 percent.

Note.–Shares of shipments are based on complete BBs and parts of BBs. Firms listed above that reported the production of BB parts consist of: ***.

Source: Compiled from data submitted in response to Commission questionnaires.

producers, their positions on continuation, shares of the value of U.S. shipments, parent firms, and related foreign producers.

Table BB-I-13 provides information reported by firms in their producer questionnaire responses on changes in the character of firm operations or organization relating to the production of BBs since January 1, 2000. Major corporate reorganizations included the purchase of FAG and Barden by INA and, as of January 1, 2005, a merger into the Schaeffler Group. In addition, Torrington was acquired by Timken on February 18, 2003. Some firms reported expanding their production operations or capacity to produce (specifically, Koyo, Nachi Technology, New Hampshire, NN, and NSK) and, in the case of New Hampshire, completing a new factory in Chatsworth, CA. Other firms reduced production, closed production lines, or removed equipment (specifically, ***) and, in the case of NN (in Walterboro, SC), NTN (in Greensburg, IN), SKF (in Altoona, PA), and Timken (in Rockford, IL), closed entire plants.[52] *** and *** described the rationalization undergone by their U.S. plants as a re-allocation of their corporate resources to produce more customized bearings in the United States and offshore the production of standard bearings. Several firms (including ***) attributed closures to competition from nonsubject imports, particularly China. NN is reported in the industry press as having closed the Walterboro, SC precision ball factory, in part, because of its need for closer proximity to its customers, which has been largely met with the firm's entry into a joint venture with SKF (Sweden) and FAG (Germany) to create Euroball.[53]

Table BB-I-13
Ball bearings: Reported changes in the character of firm operations or organization relating to the production of ball bearings since January 1, 2000

Firm	Plant location(s)	Time period	Reported change[1]
Delphi	Sandusky, OH	2003	***.
Emerson	Valparaiso, IN	2001	***.
	Ithaca, NY	2002	***.
Hoover Precision	Washington, IN	2001	***.
Koyo	Orangeburg, SC; Richland, SC	Since 2000	***.
Nachi Technology	Greenwood, IN	2000	***.
Nakanishi	Not provided	2004	***.
	Not provided	2003-05	***.
New Hampshire	Chatsworth, CA	Early 2000	***.
	Peterborough, NH	2005	***.

Table continued on next page.

[52] Future anticipated plant closings include: ***.

[53] Corresponding capacity cuts in the United States were reportedly necessary. Bruce A. Carr, "NN Will Close Walterboro Ball Plant, Shift Production to Other Facilities," *The eBearing News*, Sept. 13, 2001, found at http://www.ebearing.com, retrieved June 16, 2005.

Table BB-I-13--Continued
Ball bearings: Reported changes in the character of firm operations or organization relating to the production of ball bearings since January 1, 2000

NN	Erwin, TN	Mar. 2000	***.
	Danielson, CT	Feb. 2001	***.
	Walterboro, SC	Dec. 2001	***.
NSK	Ann Arbor, MI Clarinda, IA ***	Since 2000	***.
NSK	Franklin, IN; Liberty, IN ***	Since 2000	***.
	Not specified	2004	***.
NTN	Greensburg, IN	February 2004	***.
Pacamor/ Kubar	Troy, NY	Ongoing	***.
Rexnord	Indianapolis, WI	Since 2000	***.
	Indianapolis, WI	October 2002	***.
Schaeffler	--	Not provided	***
SKF	Altoona, PA	2004	***.
	Jamestown, NY Falconer, NY	Not provided	***.
	Aiken, SC	Not provided	***.
Timken	--	2000	***.
	--	2003	***.
	Torrington, CT	2003	***
	Rockford, IL	2004	***.
	Clinton, SC	2005-07	***.

[1] Reported changes consist of (1) plant openings, relocations, expansions, acquisitions, consolidations, closures, or prolonged shutdowns; (2) curtailment of production; (3) revision of labor agreements; or (4) any other changes. Only changes that apply to firm's U.S. operations are listed in this table.

Note.–The following firms reported not having experienced any changes in the character of their operations since January 1, 2000: ***.

Source: Compiled from data submitted in response to Commission questionnaires.

For plant locations *see* the tabulation below.

Firm	Plant locations[1]
Atlantic	Wilson, NC
Delphi	Sandusky, OH[2]
Emerson	Valparaiso, IN (McGill Manufacturing Co.); Ithaca, NY (Rollway Bearing International LTD and Emerson Power Transmission Drives & Components, Inc.); St. Louis, MO (Emerson Chain)
Hoover	Cumming, GA
Koyo	Orangeburg, SC (ball bearings); Richland, SC (ball bearing hub units)
Nachi	Greenwood, IN
Nakanishi	Winterville, GA
New Hampshire	Chatsworth, CA; Laconia, NH; Peterborough, NH
NN	Erwin, TN; Danielson, CT; Lubbock, TX
NSK	Ann Arbor, MI; Clarinda, IA; Franklin, IN; Liberty, IN
NSK-AKS Precision Ball	Clarinda, IA
NTN	Lititz, PA; Macomb, IL
Pacamor/Kubar	Troy, NY
Rexnord	Indianapolis, IN; Clinton, TN
Rockwell	Rogersville, TN
Saint Gobain	East Granby, CT
Schaeffler	Fort Mill, SC
SKF	Altoona, PA (2000-04); Glasgow, KY (specifically, HBUs); Aiken, SC (specifically, HBUs); Gainesville, GA; Jamestown, KY; Falconer, NY
Timken	Clinton, SC; Canton, GA (parts); Pulaski, TN; Rutherfordton, NC; Union, SC; Walhalla, SC; Rockford, IL (closed 2003); Torrington, CT (sold 2003); Lebanon, NY (MPB); Keene, NH (MPB)
Triangle	Oshkosh, WI
Trostel	Lake Geneva, WI; Whitewater, WI

[1] Location, for some firms, may refer to headquarters.
[2] The Sandusky facility is Delphi's only bearing manufacturing facility. The facility produces ball bearing wheel hub units for the automotive sector and has supplied ball bearing wheel units for most of General Motors' high volume vehicles. Domestic interested parties' posthearing brief, p. Lane 18.

Source: Compiled from data submitted in response to Commission questionnaires.

As indicated earlier, both the UAW and the USW support the continuation of the antidumping duty orders on BBs from France, Germany, Italy, Japan, Singapore, and the United Kingdom. The following tabulation provides a list of facilities producing BBs that employ workers represented by these unions:[54]

[54] Compiled from letter submitted by counsel to the domestic interested parties, May 16, 2006.

Company (subsidiary/plant)	Facility location	Representation
Abbott Ball Company	West Hartford, CT	UAW
Delphi	Sandusky, OH	UAW
Emerson Electric Co. (SealMaster)	Aurora, IL	UAW
Kaydon (Industrial Tectonics Inc.)	Dexter, MI	UAW
Minebea Co. (New Hampshire Ball Bearings, Astro Division)	Laconia, NH	USW
NSK	Ann Arbor, MI	UAW
NTN (NTN-BCA)	Lilitz, PA	USW
RBC Bearings, Inc (Aircraft Products, Inc.)	Torrington, CT	UAW
RBC Bearings, Inc. (Nice Ball Bearings Inc.)	Kulpsville, PA	USW
RBC Bearings, Inc. (Heim Bearings Co.)	Fairfield, CT	UAW
SKF	Glasgow, KY	USW
SKF	Hanover, PA	USW
SKF	Jamestown, NY	UAW
Tsubaki Nakashima Co. Ltd. (Hoover Precision Products Inc.)	Erwin, TN	USW

The following tabulation summarizes U.S. producers' positions regarding revocation of the BB orders and the shares of the value of U.S. shipments held by U.S.-domiciled and foreign-domiciled U.S. BB producers in both 1998 and 2005 (*see* table BB-I-12):

Item	1998	2005
	Share of value of U.S. shipments (*percent*)	
Producers supporting continuation of all orders	31.0	37.0
Producers supporting revocation of all orders	57.5	51.2
***	--	***
Producers taking no position	11.6	***
U.S.-domiciled producers	48.5	43.2
Foreign-domiciled producers	49.0	56.9

As shown in the above tabulation and in table BB-I-12, a number of domestic manufacturers either maintain off-shore production facilities or are related to foreign manufacturers. Hoover, Koyo, Nachi Technology, Nakanishi, Minebea, NSK, and NTN are Japanese-owned while the Schaeffler Group and SKF are owned by German and Swedish corporations, respectively. Timken, with U.S.ownership, also manufactures BBs on a world-wide basis. Related foreign manufacturing plants are located in both subject countries (particularly Japan) as well as in a number of nonsubject countries including China.

U.S. Importers

Importers of BBs are located throughout the United States. As indicated earlier, most of the largest importers of subject BBs have responded to the questionnaire. Exceptions consist of a large importer of BBs from France (***),[55] one of the largest importers of BBs from Germany (***[56]), along with several other substantial importers of BBs produced in Germany, and two of the largest importers from Italy (***).[57] As shown in table BB-I-14, *** from France and *** from Italy. *** also imports BBs from Germany. Other substantial importers of BBs from Germany consisted of the ***. Numerous firms import subject BBs from Japan, with the U.S. affiliates of Japanese manufacturers (***) among the largest of the individual importing firms. *** from the United Kingdom. *** U.S. imports of BBs from Singapore were by ***. A substantial portion of U.S. imports of BBs are imported by firms related to manufacturers that, in many cases, operate facilities throughout the world. Several of the importing firms are themselves U.S. producers (for example, ***) or are related to U.S. producers (for example, ***). Data on U.S. producers' imports of BBs are presented in part III.

Table BB-I-14
Ball bearings: U.S. importers' reported subject U.S. imports in 2005, shares of the value of reported subject U.S. imports, parent firm(s), and related domestic manufacturer(s), by source

* * * * * * *

U.S. Purchasers

Major purchasers of BBs include ***. The largest reporting purchaser's total purchases accounted for less than *** percent of U.S. consumption in 2005, and a majority of BB purchasers that reported purchases (especially the larger purchasers) purchased BBs from more than one country.

BB purchasers were asked if related firms imported or produced certain bearings. Thirty-two said no related firms, domestic or foreign, imported certain bearings. Eleven (***) said related firms did import. (While *** answered that no related firms imported bearings, it listed affiliated companies.) Thirty-nine purchasers said no related firms produced bearings, while five (*** indicated they had related firms producing bearings. (While *** did not respond that related firms produce bearings, the Commission received questionnaires from related firms producing bearings.)

[55] *** amended its questionnaire response to include data on its U.S. imports from France (Letter from counsel, dated March 22, 2006, transmitting the revisions). ***.

[56] As was the case for certain of the other questionnaire recipients, *** indicated that ***.

[57] ***.

APPARENT U.S. CONSUMPTION AND MARKET SHARES

The demand for BBs is derived from its end-use markets, which include the steel, paper, food processing, chemical, motor vehicle, and aerospace industries. Table BB-I-15 presents data on U.S. shipments and apparent U.S. consumption of BBs, and table BB-I-16 presents data on U.S. market shares. The value of apparent consumption of BBs decreased irregularly by 10.8 percent from 2000 to 2004 and then increased by 5.8 percent from 2004 to 2005 for a net decrease of 5.6 percent over the period. The market share by value of U.S. producers' shipments remained relatively constant from 2000 to 2003 at 67-68 percent and then fell to 63-64 percent in 2004 and 2005. The market share of subject imports fluctuated within about 2 percentage points throughout the 2000-05 period while the market share of nonsubject imports increased steadily from 18.4 percent in 2000 to 23.6 percent in 2005.

Table BB-I-15
Ball bearings: U.S. shipments of domestic product, U.S. imports, by sources, and apparent U.S. consumption, 2000-05[1]

Item	2000	2001	2002	2003	2004	2005
			Value *(1,000 dollars)*			
U.S. producers' shipments	1,960,512	1,751,100	1,760,207	1,670,826	1,652,004	1,732,112
U.S. subject imports from –						
France	27,008	25,788	22,549	22,029	25,014	23,807
Germany	36,814	33,978	30,174	33,779	45,071	51,816
Italy	21,813	18,559	32,185	33,417	33,321	20,556
Japan	277,538	231,115	204,350	191,413	218,125	253,389
Singapore	35,033	26,994	21,291	12,362	6,681	3,473
United Kingdom	11,768	10,817	8,074	8,219	10,487	11,284
Subtotal	409,973	347,252	318,622	301,219	338,699	364,325
U.S. nonsubject imports from-						
France (SNFA France)	***	***	***	***	***	***
Germany (Paul Mueller)	***	***	***	***	***	***
Italy (Somecat)	***	***	***	***	***	***
Japan (Honda)	***	***	***	***	***	***
UK (SNFA UK)	***	***	***	***	***	***
Canada	124,698	118,756	127,045	102,067	106,534	105,476
China	126,242	127,950	137,685	125,625	158,455	179,043
All others	244,344	209,726	224,971	252,852	304,911	323,270
Subtotal nonsubject	534,592	483,191	514,569	506,499	601,536	646,355
Total imports	944,566	830,443	833,192	807,718	940,234	1,010,680
Apparent consumption	2,905,078	2,581,543	2,593,399	2,478,544	2,592,238	2,742,792

[1] These data are for both complete bearings and parts.

Note.– Data for U.S. producers are believed to be understated compared to data for U.S. imports. Import values for subject countries are adjusted to reflect both the revocation of the BB orders on SNFA France (France), Paul Mueller (Germany), Somecat (Italy), Honda (Japan), and SNFA UK (UK) and nonsubject product. ***.

Source: Compiled from data submitted in response to Commission questionnaires and from official Commerce statistics.

Table BB-I-16
Ball bearings: U.S. market shares, by sources, 2000-05[1]

Item	2000	2001	2002	2003	2004	2005
			Value *(1,000 dollars)*			
Apparent consumption	2,905,077	2,581,543	2,593,399	2,478,544	2,592,238	2,742,792
			Share of value *(percent)*			
U.S. producers' shipments	67.5	67.8	67.9	67.4	63.7	63.2
U.S. subject imports from –						
France	0.9	1.0	0.9	0.9	1.0	0.9
Germany	1.3	1.3	1.2	1.4	1.7	1.9
Italy	0.8	0.7	1.2	1.3	1.3	0.7
Japan	9.6	9.0	7.9	7.7	8.4	9.2
Singapore	1.2	1.0	0.8	0.5	0.3	0.1
United Kingdom	0.4	0.4	0.3	0.3	0.4	0.4
Subtotal	14.1	13.5	12.3	12.2	13.1	13.3
U.S. nonsubject imports from--						
France (SNFA France)	***	***	***	***	***	***
Germany (Paul Mueller)	***	***	***	***	***	***
Italy (Somecat)	***	***	***	***	***	***
Japan (Honda)	***	***	***	***	***	***
UK (SNFA UK)	***	***	***	***	***	***
Canada	4.3	4.6	4.9	4.1	4.1	3.8
China	4.3	5.0	5.3	5.1	6.1	6.5
All others	8.4	8.1	8.7	10.2	11.8	11.8
Subtotal nonsubject	18.4	18.7	19.8	20.4	23.2	23.6
Total imports	32.5	32.2	32.1	32.6	36.3	36.8

[1] Shares are calculated from data for both complete bearings and parts.

Note.– Import values for subject countries are adjusted to both reflect the revocation of the BB orders on SNFA France (France), Paul Mueller (Germany), Somecat (Italy), Honda (Japan), and SNFA UK (UK) and nonsubject product. ***.

Source: Compiled from data submitted in response to Commission questionnaires and from official Commerce statistics.

Table BB-I-17 presents data on the ratio of subject imports to U.S. production.

Table BB-I-17
Ball bearings: U.S. production, subject imports, and ratio to production, 2000-05

Item	2000	2001	2002	2003	2004	2005
	Quantity *(1,000 complete bearings)*					
U.S. production	328,200	260,793	256,278	242,468	226,236	203,819
Subject U.S. imports from--						
France	2,026	2,198	1,912	1,881	2,110	1,669
Germany	5,086	4,124	4,067	2,524	2,419	3,668
Italy	2,074	2,817	2,954	3,519	2,773	1,916
Japan	66,050	52,514	47,885	42,999	47,423	53,456
Singapore	74,010	62,935	49,424	30,797	18,333	7,485
United Kingdom	2,731	783	441	320	440	298
Total	151,978	125,370	106,683	82,041	73,499	68,492
	Ratio to production *(percent)*					
Subject U.S. imports from–[1]						
France	0.6	0.8	0.7	0.8	0.9	0.8
Germany	1.5	1.6	1.6	1.0	1.1	1.8
Italy	0.6	1.1	1.2	1.5	1.2	0.9
Japan	20.1	20.1	18.7	17.7	21.0	26.2
Singapore	22.6	24.1	19.3	12.7	8.1	3.7
United Kingdom	0.8	0.3	0.2	0.1	0.2	0.1
Total	46.3	48.1	41.6	33.8	32.5	33.6

[1] These data are adjusted to reflect both the revocation of the BB orders on SNFA France (France), Paul Mueller (Germany), Somecat (Italy), Honda (Japan), and SNFA UK (UK) and nonsubject product.

Source: Compiled from data submitted in response to Commission questionnaires and from official Commerce statistics.

PART II: CONDITIONS OF COMPETITION IN THE U.S. MARKET

INTRODUCTION

A wide variety of industries demand BBs, and that demand has risen since 2000. There are multiple U.S. suppliers as well as major import sources, but there have been some reports of tight supply in recent years. Purchasers include major automotive and aerospace parts manufacturers.

U.S. MARKET SEGMENTS

BBs are sold by suppliers (producers and importers) to either OEMs or distributors. Distributors assist customers with maintenance, repair, and expertise in selecting the appropriate replacement bearing.[1] BBs for OEMs may be custom designed while BBs for distributors are more likely to fit into slightly broader categories to be sold to the aftermarket. Domestic interested parties stated that supplying the OEM market is often important for supplying the aftermarket, as aftermarket sales are often of the same brand as the parts they are replacing.[2] Regardless of whether they are sold to OEMs or distributors, though, BBs are sold in a wide variety of specifications.

Respondent interested parties have argued that the certain bearings market is divided into custom and standard markets, where custom bearings are made to order to purchaser specific designs generally sold to automotive OEMs and standard bearings are off-the-shelf, catalogue bearings sold to aftermarket distributors.[3] Domestic interested parties deny that there is a clear definition of custom or standard bearings, and added that there is the same amount of competition for most bearings, regardless of whether made to highly specific designs or not.[4]

Some BBs are sold to U.S. defense industries that may have U.S.-made requirements as specified in the DFAR. When asked if there were any "Buy American" requirements in the U.S. market, nine producers and 15 importers[5] answered that there were, while five producers[6] and 21 importers answered that there were not. *** explained that "Buy American" regulations may change year-to-year and may be subject to waivers on occasion. *** described such markets as a small percentage of its sales, and *** expected that a pending rewrite of DFAR would remove some of the protections for U.S. producers. *** explained that even when export control or defense regulations are not the reason for favoring U.S.-made bearings, some aerospace customers prefer U.S.-made bearings so that the bearing producer could share liability in the event of the catastrophic failure of an aircraft part.

---

[1] Hearing transcript, p. 232 (Hooser).

[2] Hearing transcript, pp. 166-167 (Swinehart and Griffith).

[3] Hearing transcript, pp. 216-217 (Button), 218 (Fullerton), 233-234 (Kuetemeier), and 277-278 (Rouse). Schaeffler Group also described supplying the automotive OEM market with U.S. production while supplying the aftermarket with imports from low cost countries. Hearing transcript, pp. 233-234 (Kuetemier). NBCA also stated that the small BB market for industrial uses had been captured by low-priced imports from China. Hearing transcript, p. 225 (Eich).

[4] Hearing transcript, pp. 104-106 (Timken and Swinehart).

[5] The following firms submitted both an importer's and a producer's questionnaire: ***. For the purposes of this chapter, the responses of these firms have been counted both as a producer and as an importer. (However, as *** also submitted a questionnaire and is related to ***, its answers have not been counted in this section). In almost all cases, the answers to the producer's and importer's questionnaires were substantially similar or identical as the firm referred to its response in the other questionnaire.

[6] Producer *** stated that DFAR requirements for ball and roller bearings had lapsed.

Geographic Markets

BBs are generally sold to national markets. Fourteen producers and 41 importers indicated that they serve a national market, while only four producers and six importers indicated that they primarily serve smaller regional markets.

SUPPLY AND DEMAND CONSIDERATIONS

U.S. Supply

The major suppliers of BBs in the U.S. market are U.S. producers (some of whom are affiliated with multinational companies either based in the United States or other countries) and importers of nonsubject country BBs. Imports from subject countries are currently a small, but not insignificant, part of the U.S. market.

Domestic Production

Based on available information, U.S. BB producers are likely to respond to changes in demand with large changes in the quantity of shipments of U.S.-produced BBs to the U.S. market. The main contributing factors to this degree of responsiveness of supply are the availability of unused capacity, the existence of alternate markets (though switching may be difficult), and moderate inventories.

Producers and importers were asked if there were any changes in factors of supply[7] that had affected the availability of U.S.-produced BBs in the U.S. market since January 2000. Fourteen producers and 37 importers answered no while six producers and 12 importers answered yes, citing increased energy, labor, medical and transportation costs, as well as continued imports from other countries.[8]

Purchasers were also asked if there had been any changes in the factors affecting supply since January 1, 2000. Twenty-eight BB purchasers said yes, and 18 said no. Most firms that answered yes described increased raw material (steel, natural gas, etc.) prices driving decreased availability of bearings.[9] *** remarked that it had seen tighter worldwide supply for the last year and a half due to worldwide steel shortages. It continued that lead times had increased, but that prices had increased only moderately and at roughly the same rate as inflation. *** stated that steel availability became limited in 2004, forcing the price of bearing quality steel up 30 to 40 percent. *** estimated that raw material costs had risen 40 to 50 percent in the last two years. *** described present availability (since 2004) as "terrible." *** attributed price increases to *** controlling a large segment of the steel for bearings and not being able to increase output in 2004 and 2005. *** described U.S. capacity for BBs as shrinking since 2000. It indicated that NTN-USA closed its Indiana plant in 2003, and then Timken had reduced its BB product line over 2003-05 while increasing prices for other BBs.

Purchasers were asked if they had experienced a supply shortage of any certain bearings and/or had been placed on allocation. Twenty-two BB purchasers answered no, though three of those noted

---

[7] The question specified changes other than increased raw material costs.

[8] *** cited continued dumping by foreign competitors while *** cited overseas production by firms such as Timken and NSK. Producers were also asked if they anticipated any changes in the availability of U.S.-produced certain bearings in the U.S. market in the future. Fourteen anticipated no change, while five predicted a decrease. *** explained that it and its competitors had increased capacity, and thus expected to see an overcapacity situation by 2008. *** predicted more sourcing of BBs from outside the United States due to purchasers' low-price demands.

[9] Several specified that the effect was particularly acute for TRBs, without mentioning whether the effect was the same for BBs.

there had been longer lead times. Twenty-three BB purchasers answered yes, although eleven of those stressed shortages in TRBs rather than BBs.[10] *** noted that the shortage was particularly acute for large-bore products.[11]

Thirteen producers and 38 importers stated that there had not been any changes in the product mix, range, or marketing of BBs since January 2000, but six producers and 12 importers stated that there had been. Among those that did report changes, *** described its own increased efforts to capture a larger share of the market for physically larger, more specialized bearings in medical, construction, and mining equipment. *** also reported a trend toward more custom BBs. *** described a similar move toward technologically advanced BBs for automobile wheel assemblies. *** saw increased internet sales.[12]

Fourteen producers and 44 importers did not anticipate any changes in the product mix, range, or marketing of BBs, while five producers and six importers did, mostly citing trends they had indicated in answer to other questions, such as increased marketing over the internet and an increased trend towards more custom bearings.

Industry capacity

Capacity utilization has been relatively stable since 2001, but there is room for more production. According to producers, equipment capacity and available labor are the main constraints on BB production.

Alternative markets

Most producers described shifting sales to alternative country markets as ranging from difficult to impossible.[13] Certification, discrepancies between metric and English measurements, competition from foreign suppliers, and local production all made such shifts difficult. In addition, *** supplied a list of tariffs on U.S. bearings from a variety of large developing countries,[14] and added that markets in Japan and Europe are also difficult to access due to regulations in Japan; exclusive relationships between producers and distributors in Japan; and strong market share dominance of major European producers in Europe. At the hearing, domestic interested parties said that while 90 percent of the certain bearings consumed in Japan come from Japanese-based producers, and 80 percent of the certain bearings consumed in the E.U. come from E.U.-based producers, only 70 percent of certain bearings consumed in the United States come from U.S.-based producers.[15]

Producers were asked if their exports were subject to tariff or non-tariff barriers in other countries. Ten said no and seven said yes. Those that said yes cited Japanese tariffs on BBs in retaliation

---

[10] At the hearing, representatives of Timken, Emerson, and Pacamor Kubar said that they were not aware that BBs were on allocation. Hearing transcript, pp. 83-84 (Griffith, Swinehart, and Sperrazza). However, the JBIA disagreed and cited purchasers' statements that they had been placed on allocation. JBIA's posthearing brief, pp. 5-7.

[11] In addition, ***, sent a letter to the Commission describing Timken placing it on allocation in ***. According to ***, such allocation meant that *** was forced to purchase BBs at substantially higher prices or with different specifications. See, letter from ***.

[12] Additionally, importer *** said that it received e-mails from Chinese firms "every day" soliciting business.

[13] However, *** reported that distribution chains already exist, so shifting would be "fairly simple."

[14] These reported tariffs on imports of U.S. BBs included applied tariff rates of 8 percent in China, 2.5 to 9 percent in Taiwan, 30 percent in India, 5 percent in Indonesia, 8 to 13 percent in Korea, and 10 percent in Thailand.

[15] Hearing transcript, p. 133 (Griffith).

for the Continued Dumping and Subsidy Offset Act, and the allegedly closed nature of the Japanese market to genuine import competition. There was also mention of tariffs on BBs in Korea.

Production alternatives

There are few production alternatives for BBs. Sixteen BB producers stated that there were no production substitutes for BBs, and the four who indicated that there were generally cited other types of bearings (e.g., roller bearings) as potential substitutes.

Subject Imports

Based on available information, the subject country producers are likely to respond to changes in demand with large changes in the quantity of shipments of BBs to the U.S. market.[16] The main contributing factor to this degree of responsiveness of supply is the substantial level of exports to alternative markets reported by all subject countries, even though some countries have reported high levels of capacity utilization.[17]

Twenty foreign producers/exporters related that the product range, product mix, and marketing of BBs in their home market was not different than those of the United States. Six firms said these were different. *** reported that its home market bearings were different from U.S. market bearings in dimension, design, and application. Other firms, like ***, emphasized the uniqueness of customized bearings.

Twenty-one foreign producers/exporters predicted no changes in product range, product mix, and marketing of BBs. *** reported that it expected its trend of specialization in the European market to continue; *** expected a similar trend of specialization in the Japanese market. *** predicted exports from Japan increasingly to comprise custom bearings.

Twenty-one foreign producers/exporters did not see changes in supply factors other than raw material costs. *** noted that although electricity and gas prices have been increasing since 2000, no changes have affected the availability of subject BBs in the U.S. market. Nine firms reported changes in supply factors. *** commented that increased competition from Chinese- origin products has dictated greater reliance upon custom-designed, more highly engineered products. *** mentioned that energy prices rose from 2003-05. *** restructured their business so as to source standard BB production in low-cost countries (China and other nonsubject countries) and customized BB production as close as possible to customers.

---

[16] JBIA disagreed with this assessment, explaining that demand in other countries and the alleged difficulties of switching producers for custom BBs would make such increases unlikely in the event of revocation. JBIA's prehearing brief, pp. 39-41 and 49.

[17] There may be a large "gray market" for certain bearings as well. This "gray market" would consist of certain bearings produced by the foreign affiliates of U.S. producers, purchased overseas, and then sold into the United States. Domestic interested parties allege that because SKF lost an appeal of a 337 investigation finding that SKF was not entitled to relief for gray market imports of its BBs, and that because Customs has classified such gray market imports as subject to the higher "all other" duty rates since 2003, revocation of the duties on BBs would cause an increase in imports of these gray market BBs. SKF estimates the gray market as worth $100 million for SKF products alone, but other respondent interested parties allege that the falling value of the U.S. dollar relative to the Euro has eliminated the incentive for any such gray market imports, and that such gray market imports compete with nonsubject country imports rather than U.S.-produced BBs. Hearing transcript, pp. 68, 142-145, 337-338, 343, 391 (Kaplan, Stewart, Salonen, Schutzman, Shelley, and Peacock). However, in its posthearing brief, SKF said that gray market sales are always within one brand, e.g., a distributor selling gray market SKF BBs to customers of SKF BBs. SKF's posthearing brief, p. 8.

Foreign producers/exporters were asked to describe the competition between BB suppliers in their home market. German producers listed their competitors, including the well-known multinational producers: INA, FAG, SKF, Timken Super Precision, Barden, NSK, and JTEKT/Koyo. *** commented that there are four to five principal competitors for most business, and approximately two dozen smaller, specialty producers. *** mentioned that standard BB production has shifted from western Europe to low-cost, nonsubject countries. In France, *** reported home market competitors as *** and suppliers of imported product. One Italian producer, ***, described home market competition as high, and import competition as medium. In the U.K., *** faces competition from *** for aeroengine BBs. *** related that there are primarily four customers in the aerospace market. Major competitors mentioned were, by country: ***. *** stated that there are only two to three competitors for most of the home market business. The Japanese market was described as highly competitive and mature. According to ***, there are five competitors with large market share and power (***), and approximately 15 to 20 smaller companies. *** stated that these five manufacturers account for approximately 90 percent of the Japanese market, particularly dominating customized bearing production. *** separated the OEM manufacturers – *** – from the aftermarket suppliers, ***.

Sixteen foreign producers/exporters experienced import competition in their home market; thirteen did not. *** named *** as importers from Germany, Japan, Poland, and Romania that competed in the French market. *** reported that bearings are increasingly imported from Asia to France. *** of Germany mentioned competition from Japan, Italy, Sweden, China, and the U.K. *** of Germany noted competition from China, Central/Eastern Europe, Singapore, and Thailand. *** competes in Italy with imports from Germany, France, Poland, Japan, Korea, China, Thailand, and Indonesia. Japanese foreign producers/exporters reported competition from Korea, China, the United States, Thailand, Singapore, and Indonesia. *** said the amount of imports was not large. U.K. foreign producers/exporters reported competition from Germany, the United States, Japan, and China.

Twenty-three foreign producers/exporters reported that they anticipated no changes in the future availability of subject BBs in the United States. Five firms anticipated a decrease. *** expected a flood of Chinese bearings in the U.S. market. *** of Japan expected a decrease in availability because of demand growth in Asian markets. *** expected a drop in Japanese BBs as *** and other Japanese producers shift production of standard BBs to low-cost countries. *** forecasted a possible decrease in supply due to its shift in focus towards customized BBs produced for the European market.

Importers were asked if they anticipated any changes in the availability of subject imports in the future. Thirty-nine importers anticipated no changes, but nine importers predicted a decrease while one importer forecast an increase. *** said that overseas demand for BBs, from both Europe as well as Asia, would decrease availability of subject BBs in the United States. *** forecast fewer subject imports as the presence of nonsubject country imports would continue to grow.

Industry capacity

Fourteen foreign producers/exporters cited capacity as a production constraint, 13 cited qualified labor, and two cited raw materials shortage. Data from foreign producer questionnaires show high capacity utilization in Italy, Japan, Singapore, and the United Kingdom, but somewhat lower utilization rates in France and Germany.

Alternative markets

Thirty-four importers described shifting sales to alternative country markets as ranging from difficult to impossible.[18] Customer approval, certification, discrepancies between metric and English measurements, U.S. DFAR requirements, and local production all made such shifts difficult. *** elaborated that it had reduced its capability to manufacture standard bearings in *** in order to focus production in these countries on custom BBs designed for OEMs.

Foreign producers/exporters were asked to describe how easily they could shift BB sales between the United States and alternative markets. Fifteen characterized the shift as difficult. Reasons mentioned frequently were: existing customer commitments (***), custom specifications (***), different U.S. specifications (***), certification (***), and origin rules (***). Two sellers, ***, noted that a shift would be difficult because all their sales support installed products; another seller, ***, exported to a U.S. affiliate based on demand for the affiliate's products. Three firms (***) characterized the shift as easy, with *** describing the antidumping order as the only constraint. Seven others (including four from one global firm, ***) would make the shift as business demanded it. One firm who characterized the shift as difficult, ***, pointed out that most sales made were made to distributors and not OEM customers, and thus were more easily shifted.

Importers were asked if their exports were subject to tariff or non-tariff barriers in other countries. Twenty-seven said no and ten said yes, citing tariffs in Japan, Canada, and Korea.

Production alternatives

Thirty foreign BB producers/exporters indicated that they could not transfer equipment and related workers between the production of BBs and other products. *** added the caveat that the same factors of production could produce other bearing types in similar size ranges. *** of Japan said employees were transferrable among products within the same plant.

Nonsubject Imports

Most producers and under half of importers were in agreement that the availability of imports from nonsubject countries had increased since January 2000. Eleven producers and 22 importers said that the availability of BBs from nonsubject countries had increased since 2000, while five producers and 27 importers said that it had not changed. *** described world capacity for BBs as greater than world demand and still growing. It added that extra BB capacity in China was causing increased exports to the United States. At least six producers and 13 importers cited increased imports from China, with others mentioning increased imports from low cost countries (including countries in Eastern Europe). However, a few importers alleged that such imports do not compete with U.S. production as they are more likely to be lower quality, "standard" BBs. *** described nonsubject country BBs imported into the United States as having "completely changed" the conditions of competition in the U.S. market, forcing it to exit several types of bearing production and consolidate other BB production ***.

Because China was alleged to be a major new force in BB production, producers and importers were asked to describe the effect that China had had on the supply and demand of BBs. Fourteen producers and 35 importers described Chinese production as increasing, with most of those adding that Chinese BBs are also coming to the United States in greater numbers. Several producers and importers described China as a major demand source for BBs, and described Chinese BB production as primarily intended for Chinese or world consumption. However, a majority of producers and importers who

[18] *** indicated that it could shift sales easily within 12 months. *** noted that many Chinese companies now warehouse BBs in the United States, making purchases easier.

answered that the supply of Chinese BBs was increasing described higher volumes of Chinese BBs being imported into the United States, often at low prices, and capturing market share in the standard and OEM markets. However, there were also some reports that Chinese BBs do not meet the quality standards for some custom bearings.

U.S. Demand

Demand Characteristics

One U.S. producer described bearings demand as depending on the number of "turning wheels" in the economy, i.e., activity in the industrial, automotive, and transportation sectors.[19] BB demand is primarily driven by the manufacture of machinery and equipment in many industries, including automotive, aerospace, construction, manufacturing, medical (including dental), and mining.[20] The JBIA described BB demand as split between three mutually exclusive segments: the automotive OEM sector that demands custom bearings; the industrial OEM sector that demands a mix of custom and standard bearings; and the aftermarket sector that demands more standard bearings.[21]

Demand for the final products in BB-using industries is usually a function of overall U.S. economic activity. U.S. GDP grew solidly in 2000, softened during 2001-02, and regained strength in 2003. GDP has grown at over six percent in 2004 and 2005,[22] and the OECD forecasts similar near-term growth.[23] U.S. manufacturing activity began shrinking in August 2000 and did not begin to expand again until February 2002. U.S. manufacturing activity was up and down until May 2003, and has been expanding since then, albeit at a slower pace at the end of 2005 compared to the middle of 2004.[24]

---

[19] Hearing transcript, p. 79 (Swinehart).

[20] Seventeen producers and 43 importers had not observed any changes in the end uses of BBs since 2000. However, importer *** noted increased medical equipment sales. *** answered that more custom-made BBs were being demanded. Similarly, *** saw increased development and use of BBs in high-tech and extreme environment applications as well as in sophisticated automotive hub units that can be used on multiple platforms. Eighteen producers and 49 importers did not expect any changes in the end uses for BBs. However, *** did expect continued development of BBs in new applications as described above.

According to purchasers, BBs are used in a variety of manufactured products, including data cartridges, fans, automotive products (gear boxes, transmissions, engines, etc.), power tools, medical and dental equipment, and many others. Forty-one BB purchasers indicated that there had been no changes in the end uses for certain bearings, while four noted that varying final products caused changes in the end uses of certain bearings. *** said that market gains by *** had meant that some certain bearings were available only from non-U.S. sources. Thirty-eight BB purchasers did not anticipate any changes in the end uses of certain bearings, while seven did, citing changes in technology and final product lines.

Foreign producers/exporters did not report any changes in end uses nor did they anticipate any changes in end uses.

[21] See, for example, JBIA's posthearing brief, pp. 8-11.

[22] See GDP statistics from the Bureau of Economic Analysis, found at www.bea.gov, retrieved February 28, 2006.

[23] OECD Economic Survey of the United States 2005 from October 27, 2005. See www.oecd.org/documentprint/0,2744,en_2649_34569_35513867_1_1_1_1,00.html, retrieved March 1, 2006. See also the Federal Reserve Bank of Philadelphia's Livingstone Survey (of economic forecasters) December 2005, found at www.phil.frb.org/files/liv/livdec05.pdf, retrieved March 10, 2006.

[24] This analysis is based on using the Institute for Supply Management's PMI Composite Index. See www.ism.ws/ISMReport/OverviewofPMI.cfm and www.research.stlouisfed.org/fred2/data/NAPM.txt, retrieved on March 10, 2006.

In the automotive sector specifically, the U.S. auto market remains the largest in the world and the BLS expects output to grow over the next 10 years.[25] While Ford and GM cut North American production of automobiles in 2005, overall North American auto market production remained steady due to increased production by foreign-owned automakers.[26] One forecast estimates a 4.9 percent annual growth in the value of the world's automotive industry.[27] While demand for autos may remain strong, one forecast for heavy truck demand predicts little to no growth as worldwide demand for trucks normalizes after several years of strong growth.[28]

In other sectors, industry groups are often touting recent success. The AIA estimated aerospace industry growth at *** percent between 2004 and 2005, and forecast growth of *** percent for 2006.[29] In construction, the CIT construction industry survey showed high levels of optimism among contractors and construction equipment distributors.[30]

Purchasers were asked if the certain bearings market is subject to distinctive business cycles. Forty-three BB purchasers answered no, and four answered yes. *** said that industrial markets such as mining are cyclical, with the usual cycle lasting three to five years. *** also tied bearings business cycles to downstream demand in automotive and other manufacturing. *** described small bearings for medical uses as a low-volume, small segment of the overall bearing market. *** said that its demand for bearings is based on its customers' models, which generally last four years. Among those answering no, *** noted that business cycles are generally steady since there are many non-automotive uses for bearings.

Purchasers were also asked if the certain bearings market is subject to distinctive conditions of competition. Thirty-three BB purchasers answered no, and 14 answered yes. Those answering yes cited the antidumping duties, the presence of imported certain bearings, and the current lack of availability of some certain bearings. *** described the BB industry as requiring close cooperation in design between suppliers and purchasers, thus making the industry dependent on long-term relationships. *** reported that the market for medical X-ray tube BBs is driven by high quality needs and exotic material usage, with few capable manufacturers worldwide.

Purchasers were further asked if the emergence of new markets for certain bearings had affected the business cycles or conditions of competition for certain bearings. Thirty-nine BB purchasers said no and eight said yes, citing competition from low-cost countries, increased Asian consumption causing increased lead times, and general manufacturing conditions.

---

[25] U.S. Department of Labor, Bureau of Labor Statistics, found at www.bls.gov/oco/cg/print/cgs012.htm, retrieved March 1, 2006.

[26] Business Week, "The Good News about America's Auto Industry" found at www.businessweek.com/print/magazine/content/06_07/b3971057.htm?chan=gl, retrieved March 1, 2006.

[27] Data Monitor, "Global Automobiles Industry Profile."

[28] Data Monitor, "Global Medium and Heavy Trucks Industry Profile."

[29] See *** producers' questionnaire response, end attachment.

[30] Http://www.cit.com/NR/rdonlyres/emg4zahhl6ibwpyui2ru6rpx6gnn5jggvxvio7tcq3unfgaz43dv34dkdgdtn5uf4jncmmviw3nfe5dekdirttkzz7b/FORECAST2005.pdf . (CIT 2005 Forecast.)

Demand Trends

Demand for BBs strengthened after 2002, and most industry participants expect stable to increasing demand in the near future. However, some large purchasers (e.g., Delphi, Ford, and GM) are having difficulty, and there are potential problems with specific demand sectors (such as heavy trucks).[31]

At the hearing, Emerson described material handling, trucks, and trains as high demand sectors now, while Timken saw strong recent growth in trucks as tapering off along with bearing demand from the automotive sector.[32] However, Eaton stated that truck demand is cyclical, and predicted that demand would turn down from 2006 to 2007 but recover in 2008.[33] Caterpillar projected more strong demand for its products through 2010, while NSK, NTN, and SKF saw reduced automotive demand balanced by strong industrial demand.[34]

Purchasers were asked how demand for their final products incorporating bearings had changed since January 1, 2000. Four BB purchasers reported that this demand was unchanged while 18 reported that it had increased, sometimes citing increased automobile production. *** said that it had been put on allocation by ***. *** cited not only increasing demand but also increased use of bearings per vehicle. *** stated that "issues" in securing sufficient supply began in January 2004. *** attributed its increase in demand for BBs to its expanded product line and business. It noted that it had responded to the higher prices for BBs by not buying BBs on long-term contracts. However, *** explained that demand for its products had increased until late 2003 and early 2004, but decreased since then. Nonetheless, it expected increasing demand in the future. Four additional purchasers indicated that demand for their products incorporating BBs had declined.

Producers and importers were asked how demand for BBs had changed since January 2000. Six producers and 19 importers reported increased demand, citing the strong automotive, aerospace, and industrial markets, as well as overall U.S. economic growth. *** (as well as several other importers) described demand growing internationally as well as domestically, driven by growth in China and India. *** characterized its own demand as "strong" due to its success in expanding its business, and added that it could not afford some recent requests for increased lead times from U.S. BB producers. Two producers and eight importers said that demand was unchanged. Finally, one producer and four importers responded that demand had decreased. *** described demand as declining from 2001-03 (particularly in agriculture, mining, and construction) before rebounding in 2004-05. However, it stated that continued offshore movement of U.S. industrial producers would temper demand. It added that European and Asian demand is strong, but that Europe and Japan still have excess BB capacity.[35]

Producers and importers were further asked if they anticipated any change in demand for BBs. Eight producers and 26 importers said no, while eight producers and 21 importers answered yes, citing economic conditions, overseas growth (especially in China), increased aerospace demand, increased construction equipment demand, and increased movement of U.S. industries to foreign countries. *** predicted a 10 percent growth in demand for automotive bearings as global car production continues to rise.

---

[31] Hearing transcript, p. 59 (Griffith).

[32] Hearing transcript, pp. 78-79 (Griffith and Swinehart).

[33] Hearing transcript, pp. 346-347 (Tefft).

[34] Hearing transcript, pp. 348 (Holder) and 349-350 (Eich, Rouse and Bergqvist).

[35] Twenty foreign producers/exporters saw an increase in demand since January 1, 2000, and attributed it to demand within their home markets and/or the United States; the economic upswing in China and India; and strong performance in the automotive sector. Seven firms saw no change, and two firms saw a decrease. Fifteen foreign producers/exporters expected a future change in demand and attributed this to gradual growth in the global economy and rapidly developing markets in China and India. Fifteen expected no change.

Purchasers generally reported increasing or stable demand for BBs. Eighteen said that demand for BBs had increased, 15 said it was unchanged, and six said it had decreased. In addition, *** stated that demand had increased outside the United States but had remained unchanged inside the United States. Those who saw increased demand cited general economic growth (especially in the mining, industrial, and construction sectors) and increased demand from the automotive sector. *** indicated that the demand for custom BBs is separate from the demand for non-custom BBs, but that its demand for custom BBs used in *** had increased. *** described domestic demand growth as fluctuating with the automotive market while global growth was driven by development in Eastern Europe and Asia. *** said that it had been put on allocation for BBs from Timken and could not secure enough supply for its own production from domestic sources. However, *** saw demand decreasing as U.S. purchasers moved their production plants overseas, and *** reported that high U.S. bearings prices would decrease demand.

When asked if they anticipated any changes in the demand for BBs, 31 purchasers said no and ten said yes. Whether they anticipated changes or not, most purchasers who elaborated tied their projections to developments in the automotive, truck, and construction markets. *** projected increased demand for their new products would drive increased demand for BBs, with *** forecasting that it would increase its purchases from *** by *** percent. *** saw truck industry demand decreasing in 2007-08, but increasing again in 2009-10. *** saw increased vehicle demand in Asia and Eastern Europe driving demand there. However, *** predicted decreased demand as U.S. manufacturers continue to move their operations overseas.

Substitute Products

Bearings are often designed for a particular and specific use, and often by a particular company to work with its other products as part of a larger machine. Thus, substitution by other products is difficult and could involve a re-design of the final product.

Only three producers and four importers named any substitutes for BBs, naming plastic roller bearings and other bearings, bushings, both certain bearings (i.e., TRBs and SPBs) and other bearings (e.g., cylindrical bearings). However, six producers and 29 importers saw no substitutes for BBs, citing the way that BBs are usually specifically and optimally designed for a particular application, making substitution by other products difficult.[36] Further questionnaire responses on substitutes underscored how few substitute products exist.[37]

---

[36] Foreign producers/exporters concurred that there are no substitutes for BBs, no changes in substitutes since 2000, and no anticipated changes in substitutes in the future.

[37] When asked if changes in the prices of substitutes had affected the prices of BBs, 11 producers and 30 importers said no, while one producer and four importers answered yes. When asked if there had been any changes in the number or type of substitutes for BBs, 17 producers and 45 importers responded that there had not been, while two importers answered that there had been. When asked if they anticipated any changes in the number or type of substitute products for BBs, 19 producers and 47 importers said that they did not.

Nineteen purchasers reported that there were no substitutes for BBs while *** cited powder metal bearings in limited applications; the rest did not answer the question. When asked if the prices of substitutes had had any effect on the price of BBs, 33 purchasers answered no. Forty purchasers had not observed any changes in substitutes, but four had, citing new technology and the substitution of BBs and SPBs by foreign manufacturers. Forty-three purchasers did not anticipate any changes in substitutes, but two did, citing potential new technological advances.

Cost Share

When purchasers were asked what percentage of the total cost of their own product was accounted for by the cost of BBs, they almost always answered less than five percent. Thus, BBs are not a large part of the final cost of many finished goods.

SUBSTITUTABILITY ISSUES

Questionnaire respondents generally described U.S. and subject BBs as performing many of the same roles at close to the same level. However, some questionnaire respondents did highlight differences between the uses of U.S. and subject country BBs.

Lead Times

Eleven BB producers and 16 BB importers reported that a majority of their sales were made to order, while four producers and 26 importers indicated that a majority of their sales were from inventory.[38] Sales from inventory generally had lead times of one to seven days while made-to-order sales had lead times ranging from one to six months.[39]

U.S. Purchasers

The Commission mailed questionnaires to 119 purchasers of certain bearings.[40] It has received responses from 51 purchasers of BBs, not including two purchasers who responded that they did not purchase bearings.[41] Twenty-two BB purchasers purchased only BBs, while six also purchased TRBs, one also purchased SPBs, and 22 also purchased both SPBs and TRBs.[42]

When asked to identify their major competitors, BB purchasers named a variety of firms across an array of manufacturing industries, including autos, automotive parts, film, aircraft parts, medical equipment, agricultural equipment, and heavy duty trucks. Distributors served both original equipment manufacturers and industrial repair customers.

Purchasers were divided among end users, distributors, and combination end users and distributors. Twenty-six described themselves as end users, twelve as distributors, and eleven as both. Fifteen purchasers said that they competed with their suppliers, while 16 said they did not.

---

[38] One producer and two importers reported sales equally split between made-to-order sales and sales from inventory.

[39] Among foreign producers/exporters, the average share of 2005 sales from inventory versus produced to order varied widely. Sales from inventory had lead times of between less than a week to two months. Sales produced to order had lead times of between two months to over a year.

[40] Questionnaires for all bearings, including ball bearings, spherical plain bearings, and tapered roller bearings, were mailed at the same time. Some firms were on more than one type of bearings list provided by suppliers.

[41] BB purchasers were asked if related firms imported or produced certain bearings. Thirty-two said no related firms, domestic or foreign, imported certain bearings. Eleven (***) said related firms did import. (While *** answered that no related firms imported bearings, it listed affiliated companies.) Thirty-nine purchasers said no related firms produced bearings, while five (***) indicated they had related firms producing bearings. (While *** did not respond that related firms produce bearings, the Commission received questionnaires from related firms producing bearings.)

[42] Purchasers were asked at several points in the questionnaire if their answers applied to BBs, SPBs, and/or TRBs. If a purchaser did not answer these questions, but did indicate that it had purchased one type of bearing or indicated familiarity with it, that purchaser is counted above as a purchaser of that type of bearing.

Forty-one purchasers reported familiarity with U.S. BBs, six with French BBs, 13 with German BBs, 27 with Japanese BBs, three with Italian BBs, five with Singaporean BBs, seven with U.K. BBs, 19 with Chinese (nonsubject country) BBs, and ten with nonsubject country (other than China) BBs. The majority of purchasers who answered the question reported familiarity with more than one country's BBs.

Purchasers were asked to report their purchases by year.[43] The largest reporting purchaser's total purchases accounted for less than five percent of U.S. consumption in 2005. Among reporting purchasers, U.S. producers held the highest market share (63 percent in 2005), followed by Japan, nonsubject countries other than China, and China (a nonsubject country for BBs). Comparing 2005 to 2002,[44] overall purchases in terms of value increased 29 percent.

From 2002-05, reported purchases from U.S. producers rose 20 percent. Purchases of Japanese imports rose 31 percent because of increases by ***. Purchases of Chinese imports rose by 45 percent as *** increases offset *** cut in purchases. Other nonsubject purchases more than doubled since 2002 behind increases by ***. Purchases of Singaporean imports fell significantly as *** decreased purchases and *** stopped purchasing altogether. Purchases of Italian imports were up more than twofold, though only (***) reported purchases in 2005, purchases that amounted to ***. Purchases of German BBs fell over 10 percent after *** stopped purchasing. Purchases of U.K. BBs were up by over five times as *** purchased more, but, like France, Germany, Italy, and Singapore, captured less than one percent of total market share in 2005.

Purchasers were asked to separate their 2005 BB purchases by "custom" or "standard" designation. Custom purchases represented over 90 percent of reported bearing purchases. For France, Germany, Singapore, the U.K., and the United States, standard BBs represented less than six percent of all BB purchases. A majority of purchases from China, Japan, Italy, and nonsubject countries other than China were custom as well.

Purchasers were also asked if their relative purchases of BBs from different countries had changed since 2000. Eight firms responded that they decreased relative U.S. purchases, citing high prices, supply unavailability, and development of duplicate suppliers, while ten increased U.S. purchases due to sales growth, localization, and lower value of the dollar. Four reported a decrease in purchases from Japan; another five reported an increase. Two purchasers decreased purchases from Germany; two others increased purchases from Germany. One firm reported an increase in purchases from France. A total of 18 reported an increase in nonsubject country purchases, of which seven said Chinese purchases rose. Two firms said they decreased nonsubject purchases.

Factors Affecting Purchasing Decisions

Available data from purchasers indicate that quality, price, traditional supplier, and availability are the most important factors that influence purchasing decisions for BBs.[45] Purchasers were asked to list the top three factors that they consider when choosing a supplier of BBs. Table BB-II-1 summarizes responses to this question. Purchasers were also asked to describe the importance of various purchasing

---

[43] One firm, ***, reported its purchases by fiscal year and calendar year. To complete this otherwise incomplete data set, the two were combined.

[44] The year 2002 was chosen as representative of activity since the last recession. Nonetheless, not all purchasers reported for all years, so trends in the purchase data may not be indicative of the overall BB market.

[45] When asked what defines the quality of BBs, purchasers listed many factors, including meeting specifications (whether industry, customer, or otherwise), durability, material quality, life cycle, and load capacity. In addition, *** reported that BB quality can be compared on the basis of raceway profile, roller crown, steel quality, and grinding finishes.

factors, as summarized in table BB-II-2. Price was an important factor for most purchasers.[46] A summary of purchaser comparisons of domestic, subject, and nonsubject BBs are presented in table BB-II-3.[47]

Table BB-II-1
Ball bearings: Ranking of purchasing factors by purchasers

Factor	Number of firms reporting		
	Number 1 factor	Number 2 factor	Number 3 factor
Quality	21	11	5
Price/cost	8	15	14
Availability	6	5	8
Traditional supplier	4	2	2
Brand/custom specs	3	1	1
Customer requirements	2	0	0
Delivery	0	6	6
Reliability	0	2	1
Technical support/service	0	1	3
Product range/capacity	0	1	1

Note.–Other factors mentioned were length of pricing agreements, location, logistics, non-compete contracts, regulatory approval, technology, and terms of sale. These answers were not included above.

Source: Compiled from data submitted in response to Commission questionnaires.

[46] When asked how often they purchase the BBs offered to them at the lowest price, no purchasers said always, 14 said usually, 22 said sometimes, and 14 said never.

[47] In this table, some purchasers marked one country compared to "all," or something similar, in which case staff used the countries for which purchase data were supplied or familiarity was expressed as comparisons.

Table BB-II-2
Ball bearings: Importance of purchasing factors

Factor	Number of firms reporting		
	Very important	Somewhat important	Not important
Availability	46	4	0
Delivery terms	22	21	7
Delivery time	43	7	0
Discounts	12	25	12
Extension of credit	3	24	22
Price	43	6	0
Minimum quantity requirements	6	34	9
Packaging	13	31	5
Product consistency	47	3	0
Quality meets industry standards	48	1	1
Quality exceeds industry standards	29	15	4
Product range	7	35	7
Reliability of supply	48	2	0
Technical support/service	27	19	3
U.S. transportation costs	10	29	11
Other	1	0	0

Source: Compiled from data submitted in response to Commission questionnaires.

Table BB-II-3
Ball bearings: Number of purchasers' comparisons of U.S.-produced and imported product

Factor	U.S. vs. France[1]			U.S. vs. Germany[1]			U.S. vs. Italy[1]		
	S	C	I	S	C	I	S	C	I
Availability	1	3	0	2	9	0	0	1	0
Delivery terms	1	2	0	1	9	0	0	0	0
Delivery time	2	1	0	4	5	1	0	0	0
Discounts	1	2	0	1	9	0	0	0	0
Extension of credit	0	3	0	0	10	0	0	0	0
Lower price[2]	1	2	0	3	5	2	0	0	0
Minimum quantity requirements	0	3	0	0	10	0	0	0	0
Packaging	0	3	0	1	9	0	0	0	0
Product consistency	0	4	0	0	10	1	0	1	0
Quality meets industry standards	0	4	0	1	9	1	0	1	0
Quality exceeds industry standards	0	3	0	1	8	1	0	0	0
Product range	2	2	0	4	7	0	0	1	0
Reliability of supply	2	1	0	1	9	0	0	0	0
Technical support/service	2	1	0	1	9	0	0	0	0
U.S. transportation costs	2	2	0	3	8	0	1	0	0
Other[3]	1	0	0	1	0	0	0	0	0

[1] S = first named source superior, C = products comparable, I = first named source inferior.
[2] A rating of superior means that the price is generally lower. For example, if a firm reports "U.S. superior," it means that the price of the U.S. product is generally lower than the price of the imported product.
[3] *** listed OEM and regulatory approval as other factors.

Table continued on next page.

Table BB-II-3--*Continued*
Ball bearings: Number of purchasers' comparisons of U.S.-produced and imported product

Factor	U.S. vs. Japan[1]			U.S. vs. Singapore[1]			U.S. vs. U.K.[1]		
	S	C	I	S	C	I	S	C	I
Availability	0	17	2	0	3	0	1	2	0
Delivery terms	2	14	2	0	3	0	0	2	0
Delivery time	4	12	2	1	2	0	0	2	0
Discounts	0	14	4	0	3	0	0	2	0
Extension of credit	0	18	0	0	3	0	0	2	0
Lower price[2]	1	12	5	0	2	1	1	1	0
Minimum quantity requirements	0	18	0	0	3	0	0	2	0
Packaging	1	17	0	0	3	0	0	2	0
Product consistency	0	17	2	0	3	0	0	3	0
Quality meets industry standards	0	17	2	0	3	0	0	3	0
Quality exceeds industry standards	0	15	3	1	2	0	0	2	0
Product range	0	17	2	1	2	0	2	1	0
Reliability of supply	0	16	2	0	3	0	1	1	0
Technical support/service	0	16	2	0	3	0	1	1	0
U.S. transportation costs	4	14	1	0	3	0	1	2	0
Other[3]	1	0	0	0	0	0	1	0	0

[1] S = first named source superior, C = products comparable, I = first named source inferior.
[2] A rating of superior means that the price is generally lower. For example, if a firm reports "U.S. superior," it means that the price of the U.S. product is generally lower than the price of the imported product.
[3] *** listed OEM and regulatory approval as other factors.

Table continued on next page.

Table BB-II-3--*Continued*
Ball bearings: Number of purchasers' comparisons of U.S.-produced and imported product

Factor	U.S. vs. Nonsubject[1]			France vs. Germany[1]			France vs. Japan[1]			France vs. U.K.[1]		
	S	C	I	S	C	I	S	C	I	S	C	I
Availability	5	32	2	0	2	0	0	2	0	0	1	0
Delivery terms	2	37	0	0	1	1	0	2	0	0	1	0
Delivery time	15	22	2	0	0	2	0	2	0	0	1	0
Discounts	0	34	5	0	2	0	0	1	1	0	1	0
Extension of credit	2	36	1	0	2	0	0	2	0	0	1	0
Lower price[2]	1	16	22	0	0	2	0	0	2	0	1	0
Minimum quantity requirements	2	37	0	0	2	0	0	2	0	0	1	0
Packaging	2	36	1	0	2	0	0	2	0	0	1	0
Product consistency	2	37	0	0	1	1	0	1	1	0	1	0
Quality meets industry standards	2	37	0	0	2	0	0	2	0	0	1	0
Quality exceeds industry standards	9	28	2	0	1	1	0	1	1	0	1	0
Product range	12	26	1	0	2	0	0	1	1	0	1	0
Reliability of supply	3	35	1	0	1	1	0	1	1	0	1	0
Technical support/service	12	26	1	0	0	2	0	0	2	0	1	0
U.S. transportation costs	1	38	0	0	2	0	0	2	0	0	1	0
Other[3]	1	0	0	1	0	0	2	0	0	0	1	0

[1] S = first named source superior, C = products comparable, I = first named source inferior.
[2] A rating of superior means that the price is generally lower. For example, if a firm reports "U.S. superior," it means that the price of the U.S. product is generally lower than the price of the imported product.
[3] *** listed OEM and regulatory approval as other factors.

Table continued on next page.

Table BB-II-3--*Continued*
Ball bearings: Number of purchasers' comparisons of U.S.-produced and imported product

Factor	France vs. Nonsubject[1]			Germany vs. Japan[1]			Germany vs. U.K.[1]			Germany vs. Nonsubject[1]		
	S	C	I	S	C	I	S	C	I	S	C	I
Availability	0	1	0	0	4	1	0	1	0	0	1	1
Delivery terms	0	1	0	0	4	1	0	1	0	0	2	0
Delivery time	0	1	0	0	4	1	0	1	0	0	2	0
Discounts	0	1	0	0	4	1	0	1	0	0	1	1
Extension of credit	0	1	0	0	5	0	0	1	0	0	2	0
Lower price[2]	0	0	1	0	2	3	0	1	0	0	1	1
Minimum quantity requirements	0	0	1	0	4	1	0	1	0	0	2	0
Packaging	0	1	0	0	5	0	0	1	0	0	2	0
Product consistency	0	0	1	0	5	0	0	1	0	0	2	0
Quality meets industry standards	0	1	0	0	5	0	0	1	0	0	2	0
Quality exceeds industry standards	0	0	1	0	5	0	0	1	0	0	2	0
Product range	0	1	0	0	3	2	0	0	1	0	2	0
Reliability of supply	0	0	1	0	4	1	0	1	0	1	1	0
Technical support/service	0	0	1	0	5	0	0	1	0	1	1	0
U.S. transportation costs	0	1	0	0	5	0	0	1	0	0	2	0
Other[3]	0	0	0	1	0	0	0	1	0	0	0	0

[1] S = first named source superior, C = products comparable, I = first named source inferior.
[2] A rating of superior means that the price is generally lower. For example, if a firm reports "U.S. superior," it means that the price of the U.S. product is generally lower than the price of the imported product.
[3] *** listed OEM and regulatory approval as other factors.

Table continued on next page.

Table BB-II-3--*Continued*
Ball bearings: Number of purchasers' comparisons of U.S.-produced and imported product

Factor	Japan vs. U.K.[1]			Japan vs. Nonsubject[1]			U.K. vs. Nonsubject[1]		
	S	C	I	S	C	I	S	C	I
Availability	0	1	0	0	7	1	0	1	0
Delivery terms	0	1	0	0	8	0	0	1	0
Delivery time	0	1	0	0	8	0	0	1	0
Discounts	0	1	0	0	7	1	0	1	0
Extension of credit	0	1	0	1	7	0	0	1	0
Lower price[2]	1	0	0	2	3	3	0	1	0
Minimum quantity requirements	0	1	0	0	8	0	0	1	0
Packaging	0	1	0	0	8	0	0	1	0
Product consistency	0	1	0	1	7	0	0	1	0
Quality meets industry standards	0	1	0	0	8	0	0	1	0
Quality exceeds industry standards	0	1	0	1	7	0	0	1	0
Product range	0	1	0	2	6	0	1	0	0
Reliability of supply	0	1	0	1	7	0	0	1	0
Technical support/service	0	1	0	3	5	0	0	1	0
U.S. transportation costs	0	1	0	0	8	0	0	1	0
Other[3]	0	1	0	1	0	0	1	0	0

[1] S = first named source superior, C = products comparable, I = first named source inferior.
[2] A rating of superior means that the price is generally lower. For example, if a firm reports "U.S. superior," it means that the price of the U.S. product is generally lower than the price of the imported product.
[3] *** listed OEM and regulatory approval as other factors.

Note.– In the U.S.-nonsubject comparison, nonsubject sources include Brazil, Canada, China, Hungary, Mexico, Poland, Romania, Russia, Slovakia, Korea, Spain, Taiwan, Thailand, and Turkey. In comparisons with U.S. product, China was named by 12 purchasers, Canada by three, Korea by three, Mexico by two, Taiwan by two, Turkey by two, and Thailand by two. In other subjec to nonsubject country comparisons, nonsubject sources include Canada, China (named by at least five purchasers), and Korea.

Source: Compiled from data submitted in response to Commission questionnaires.

When asked how often U.S.-produced BBs meet minimum quality specifications for their or their customers' uses, 23 purchasers said always, 19 said usually, and two said sometimes. When asked how often imported subject BBs meet minimum quality specifications, 20 purchasers reported always, 22 reported usually, and seven reported sometimes. When asked how often nonsubject country BBs meet minimum quality specifications, all purchasers that answered said always or usually.

Thirty-nine purchasers reported that they required certification or qualification of their suppliers for 80 percent or more of purchases, and one purchaser required certification for 25 percent of purchases. Eleven did not require certification for suppliers, but two of these qualified by mentioning an awareness of International Organization for Standardization ("ISO") certification. The qualification process can involve reviewing ISO certification, compliance with Federal Aviation Administration ("FAA") regulations, Anti-Friction Bearings Manufacturers Association ("AFBMA") membership, company

quality standards, purchased part approval process ("PPAP") quality data, product engineering, durability testing, ability to meet purchaser specifications, financial information, and customer base. Forty-two purchasers reported that no suppliers had failed to receive approval.[48]

Producers and importers were also asked what percentage of their sales are to customers that require certification. Eleven producers and 17 importers responded that 57 percent or more of their sales are to customers that require certification, while three producers and 16 importers responded that less than 25 percent of their sales were to such customers. *** responded that 90 percent of its custom BBs required certification, while only 10 percent of its standard BBs did. Firms named a wide variety of industries when asked what type of customers demand certification. When asked if they had ever been unable to qualify any type of BB, three producers and five importers said yes (citing aircraft, dental, and other applications) while 15 producers and 39 importers said no.

Purchasers were asked how often their firm makes purchasing decisions on the basis of the producer of the BBs involved. Fourteen stated always, 13 stated usually, 12 stated sometimes, and nine stated never. Reasons cited for making decisions based on the BB producer included quality assurance, long-term relationships and understanding of purchaser specifications, preferences specified by the purchaser's customers, reliability, price, quality, and availability.

Purchasers were also asked how often their customers make purchasing decisions on the basis of the producer of the BBs involved. Two reported always, eleven reported usually, 15 reported sometimes, and 14 reported never. Nine purchasers cited brand loyalty as a reason why their customers sometimes made purchasing decisions based on the producer. Other reasons included OEM specification, reputation, and industry standards.[49]

Purchasers were asked how often their firm makes purchasing decisions on the basis of the country of origin of the BBs involved. Two said always, one said usually, 17 said sometimes, and 30 said never. Purchasers were also asked how often their customers make purchasing decisions on the basis of the country of origin of the BBs involved. None said always, one said usually, 15 said sometimes, and 26 said never. Those who answered other than never cited NAFTA requirements, quality, logistics, and delivery as reasons.

When asked if they or their customers ever specifically ordered BBs from one country over others, 32 purchasers reported that they did not.[50] However, 17 purchasers stated that they did, citing design patents, quality, loyalty to particular companies, attempts to market certain bearings as U.S.-made, and local content requirements as reasons. When purchasers were asked if certain grades or types of BBs are only available from a single country source, 32 said no and 17 said yes.[51] When asked why they had sometimes purchased more expensive BBs when less expensive BBs were available, purchasers emphasized quality/certification, reliability of supply, durability, lead time, technical support, cost to approve a new supplier, customer preferences, country of origin (often for content requirements), order size, and long term agreements.

---

[48] Five firms reported instances of a supplier failing to receive certification due to quality issues. *** and *** reported bearings made in China from *** had failed to qualify. *** added that Chinese firms *** had failed qualification for reasons of quality. *** reported *** failed to qualify. *** reported many major bearings producers having failed to qualify.

[49] At the hearing, NSK described Timken and SKF as the most highly regarded brands of BBs for aftermarket distributors, and continued that Timken is able to secure premier placement on distributor shelves. It added that other BBs in the aftermarket are forced to compete on price. Hearing transcript, pp. 232-233 (Hooser).

[50] Separately, when asked if buying product that was produced in the United States was important to their firm, 34 purchasers answered no and 16 answered yes, citing legal requirements, customer requirements, a preference for local sourcing, and other reasons.

[51] Some of those that answered yes specified TRBs, not BBs, as only available from one country source.

Comparisons of Domestic Products and Subject Imports

Producers, importers, and purchasers were asked to assess how interchangeable BBs from the United States were with BBs from subject and nonsubject countries. Their responses are summarized in table BB-II-4.

In further comments, *** said that past ITC cases established the interchangeability of U.S. and subject country bearings, and that nothing has changed since those cases. It added that major foreign producers and distributors publish "interchange" charts showing how each company's bearing can substitute for other bearings, including U.S.-made bearings.[52] Producer *** noted that it only manufactures BBs using the English system, making its BBs less interchangeable with French and Italian BBs. *** also indicated that the metric vs. English system issue could make BBs not commercially interchangeable even if the BBs were technically interchangeable. *** characterized the BB market as "highly heterogeneous," with many different BBs for different applications and customers, making interchangeability difficult. *** sounded similar themes. *** said that high quality, custom BBs from subject countries are not always interchangeable with high quality, custom BBs from the United States, but standard BBs from all countries are interchangeable with each other. As a further example, *** explained that it manufactures custom BBs in its plants in *** while manufacturing standard BBs in ***, somewhat restricting interchangeability. *** described custom U.S. and Japanese BBs as sometimes interchangeable with each other but not with Chinese BBs that are made to standard specifications. *** said that when it had qualified both U.S. and Japanese BBs, there was interchangeability, but if it had qualified only Japanese BBs, there was no interchangeability. *** remarked that the steel quality in BBs from China limits their quality. *** explained that all bearings worldwide, when made to the same international dimensions and standards, were physically the same. However, it added that high-volume, less expensive bearings are rarely made in the United States.[53]

Respondent interested parties argued that most certain bearings sold in the automotive, custom OEM market were produced to buyer-specific designs.[54] Domestic interested parties disagreed, and described the purchasing process as involving a design stage at which competitive bids and designs are proffered, followed by many purchasers putting a "private print" on the specific bearing and soliciting other bids.[55]

Several purchasers noted that in comparing BBs, internal design requirements are important, but did not elaborate as to differences between BBs from different countries. In addition, *** stated that it could not identify a U.S. producer of the *** BBs that it uses. However, *** stated that BBs are made to ISO or ABMA standards. *** reported that durability sometimes depends on country of origin. *** said that BBs are interchangeable throughout the world. *** indicated that it had switched from Japanese BBs to Chinese BBs for its non-custom BBs. *** noted that interchangeability among BBs was limited because the BBs that it purchases are designed to satisfy individual applications. *** said that where both U.S. and Japanese BBs existed for an application, they were always interchangeable, but that for some applications only Japanese BBs were available. *** said that for *** applications, OEM and regulatory approval were factors that limited interchangeability. Delphi asserted that qualification is

---

[52] Copies of some of these interchange tables were provided with *** questionnaire response, section IV-C-2a attachments.

[53] Among foreign producers/exporters, when asked if BBs sold in the home market are interchangeable (same application) with the BBs sold in the U.S. market, 18 foreign producers/exporters responded yes, and seven no. Those saying no emphasized the different proportion of custom vs. standard bearing sales, with some firms reporting higher standard bearing sales in the United States and others in their home markets.

[54] Hearing transcript, pp. 216-217 (Button).

[55] Hearing transcript, p. 92 (Stewart).

Table BB-II-4
Ball bearings: U.S. producers', importers', and purchasers' perceived degree of interchangeability of product produced in the United States and in other countries

Country comparison	Number of firms reporting											
	U.S. producers				U.S. importers				U.S. purchasers			
	A	F	S	N	A	F	S	N	A	F	S	N
U.S. vs. France	4	4	5	0	8	7	6	4	6	4	2	1
U.S. vs. Germany	5	4	4	0	10	8	4	3	8	8	2	1
U.S. vs. Italy	4	4	4	0	7	6	5	3	5	5	1	1
U.S. vs. Japan	5	5	3	0	11	9	8	4	11	12	5	1
U.S. vs. Singapore	4	4	3	0	6	3	3	4	4	4	1	1
U.S. vs. U.K.	5	4	4	0	9	6	4	3	6	5	2	1
U.S. vs. nonsubject	4	5	4	0	6	5	4	5	4	7	1	1
France vs. Germany	5	5	1	0	8	6	2	1	4	4	1	0
France vs. Italy	5	5	1	0	7	6	2	1	4	2	0	0
France vs. Japan	5	4	2	0	7	7	3	1	5	3	1	0
France vs. Singapore	4	4	2	0	5	3	2	3	2	2	0	0
France vs. U.K.	5	5	1	0	7	7	2	1	4	3	1	0
France vs. nonsubject	4	4	3	0	5	4	3	2	2	3	0	0
Germany vs. Italy	5	5	1	0	8	6	1	1	4	2	0	0
Germany vs. Japan	5	4	2	0	9	8	3	2	8	7	0	0
Germany vs. Singapore	4	4	2	0	5	3	2	3	2	2	0	0
Germany vs. U.K.	5	5	1	0	8	7	1	1	4	4	1	0
Germany vs. nonsubject	4	4	3	0	5	4	3	3	2	3	0	0
Italy vs. Japan	5	4	2	0	7	7	3	1	4	2	0	0
Italy vs. Singapore	4	4	2	0	5	3	2	3	2	2	0	0
Italy vs. U.K.	5	5	1	0	7	7	1	1	4	2	0	0
Italy vs. nonsubject	4	4	3	0	5	4	3	2	2	2	0	0
Japan vs. Singapore	4	4	2	0	5	4	2	3	3	3	0	0
Japan vs. U.K.	5	4	2	0	8	7	3	1	4	4	1	0
Japan vs. nonsubject	4	5	3	0	5	5	3	3	2	4	1	0
Singapore vs. U.K.	4	4	2	0	6	3	2	2	3	2	0	0
Singapore vs. nonsubject	4	4	3	0	5	4	2	2	2	3	0	0
U.K. vs. nonsubject	4	3	3	0	5	4	3	2	2	2	1	0

Note: A = Always; F = Frequently; S = Sometimes; N = Never.

Source: Compiled from data submitted in response to Commission questionnaires.

fundamental to understanding interchangeability, as any certain bearings that have not been qualified can not be used at all.[56]

Producers and importers were asked to assess how often differences other than price were significant in sales of BBs from the United States, subject countries, or nonsubject countries. Their answers are summarized in table BB-II-5.

In further comments, producers *** noted that BBs from various countries can have differences in the areas of quality, availability, product range, and technical support. *** described brand name, product range, and technical support as crucial non-price factors, but added that non-branded producers (e.g., some producers from China and India) are often more likely to compete on price. Several importers cited issues of customer preference, quality, and specific design as other important non-price factors. *** drew a distinction between the custom BB market where such non-price factors play a crucial role and the standard BB market where BBs are more frequently interchangeable. Other importers noted that distributors often want to carry the exact brand name of the BB originally used in a part when supplying replacement BBs. *** stated that Chinese BBs have disadvantages of quality and delivery time when compared with U.S. BBs. *** said that the some purchasers would pay 10 percent more for non-Chinese BBs, but that this preference was the only important non-price factor.

ELASTICITY ESTIMATES

This section discusses elasticity estimates. Parties were encouraged to comment on these estimates.[57] Domestic interested parties agreed with staff's prehearing estimates.[58] JBIA disagreed; their disagreements are discussed in the relevant sections below.

U.S. Supply Elasticity

The domestic supply elasticity for BBs measures the sensitivity of the quantity supplied by U.S. producers to changes in the U.S. market price of BBs. The elasticity of domestic supply depends on several factors including the level of excess capacity, the ease with which producers can alter capacity, producers' ability to shift to production of other products, the existence of inventories, and the availability of alternate markets for U.S.-produced BBs. Analysis of these factors indicates that the U.S. industry is likely to be able to substantially increase or decrease shipments to the U.S. market; an estimate in the range of 2 to 5 is suggested. JBIA disagreed with staff's estimates, stating that such estimates are appropriate for standard BBs sold to the automotive aftermarket, but not for custom BBs.

---

[56] Hearing transcript, p. 251 (Holder).

[57] Richard Boltuck and Seth Kaplan, economic consultants for Pacamor Kubar and Timken, submitted an economic simulation modeling the effects of 50 and 100 percent increases in shipments of subject BBs to the U.S. market. The model uses elasticity estimates from the prehearing report in these reviews. Based on these assumptions, Boltuck and Kaplan conclude that absent the duties, the presence of subject imports of BBs would have caused declines in U.S. BB industry revenues such that the industry's return on assets would have fallen short of its annual cost of capital. Respondent interested parties disputed the magnitude of the assumed rise in subject imports as well as some of the staff elasticity estimates from the prehearing report. Domestic interested parties' prehearing brief, exh. A5; JBIA's prehearing brief, exh. 1B; hearing transcript, p. 358 (Klett); and JBIA's posthearing brief pp. 61-66.

[58] Domestic interested parties' prehearing brief, p. 2.

Table BB-II-5
Ball bearings: U.S. producers' and importers' perceived importance of factors other than price in sales of product produced in the United States and in other countries

Country comparison	Number of firms reporting							
	U.S. producers				U.S. importers			
	A	F	S	N	A	F	S	N
U.S. vs. France	0	3	5	2	2	7	5	4
U.S. vs. Germany	0	3	6	2	2	6	5	4
U.S. vs. Italy	0	3	6	2	2	4	4	5
U.S. vs. Japan	0	3	7	2	4	5	7	5
U.S. vs. Singapore	0	3	6	1	0	3	2	4
U.S. vs. U.K.	0	3	6	2	1	6	6	4
U.S. vs. nonsubject	0	2	9	1	2	4	6	3
France vs. Germany	0	3	3	1	1	4	3	3
France vs. Italy	0	3	3	1	1	4	2	3
France vs. Japan	0	3	3	1	1	5	3	3
France vs. Singapore	0	3	3	1	0	3	2	3
France vs. U.K.	0	3	3	1	0	5	2	3
France vs. nonsubject	0	2	4	1	1	3	2	3
Germany vs. Italy	0	3	3	1	1	4	2	3
Germany vs. Japan	0	3	3	1	1	5	4	3
Germany vs. Singapore	0	3	3	1	0	3	2	3
Germany vs. U.K.	0	3	3	1	0	5	2	3
Germany vs. nonsubject	0	2	5	1	1	3	2	3
Italy vs. Japan	0	3	3	1	1	5	3	3
Italy vs. Singapore	0	3	3	1	0	3	2	3
Italy vs. U.K.	0	3	3	1	0	5	2	3
Italy vs. nonsubject	0	2	5	1	1	3	2	3
Japan vs. Singapore	0	3	3	1	1	3	2	3
Japan vs. U.K.	0	3	3	1	1	5	2	3
Japan vs. nonsubject	0	2	6	1	2	3	2	3
Singapore vs. U.K.	0	3	3	1	0	3	2	3
Singapore vs. nonsubject	0	2	5	1	1	3	2	3
U.K. vs. nonsubject	0	2	5	1	1	3	2	3

Note: A = Always; F = Frequently; S = Sometimes; N = Never.

Source: Compiled from data submitted in response to Commission questionnaires.

JBIA estimated that the elasticity of supply for custom BBs should be in the range of 0.5 to 1.5, reflecting the alleged nature of the custom BB market, where products are built to specific customer designs.[59]

U.S. Demand Elasticity

The U.S. demand elasticity for BBs measures the sensitivity of the overall quantity demanded to a change in the U.S. market price of BBs. This estimate depends on factors discussed earlier such as the existence, availability, and commercial viability of substitute products, as well as the component share of the BBs in the production of any downstream products. BBs are a small but crucial part of the cost of the finished products they are used in, suggesting a highly inelastic demand; a range of -0.2 to -1 is suggested. While JBIA agreed that BB demand is highly inelastic, they disagreed with staff's specific estimates and suggested a range of -0.2 to -0.4 for the custom, automotive OEM sector and -0.5 to 1 for standard BBs; the difference reflects JBIA's allegation that price is less important in the custom, automotive OEM sector.[60]

Substitution Elasticity

The elasticity of substitution depends upon the extent of product differentiation between the domestic and imported products.[61] Product differentiation, in turn, depends upon such factors as quality (e.g., chemistry, appearance, etc.) and conditions of sale (availability, sales terms/discounts/promotions, etc.). Most purchasers described U.S. and subject imported BBs as frequently competing for many BB end uses. Based on available information, the elasticity of substitution between U.S.-produced BBs and imported BBs is likely to be in the range of 3 to 5. Again, the JBIA agreed with staff's estimates for standard BBs in the aftermarket sector but alleged that the elasticity of substitution would be low (1 to 2) in the automotive and industrial sector and non-existent (zero) in the custom BB sector, the last estimate reflecting an alleged complete lack of substitutability.[62]

---

[59] JBIA's prehearing brief, exh. 1B.

[60] JBIA's prehearing brief, exh. 1B.

[61] The substitution elasticity measures the responsiveness of the relative U.S. consumption levels of the subject imports and the domestic like products to changes in their relative prices. This reflects how easily purchasers switch from the U.S. product to the subject products (or vice versa) when prices change.

[62] JBIA's prehearing brief, exh. 1B.

PART III: U.S. PRODUCERS' TRADE AND FINANCIAL DATA

Information in this part of the report is based upon the questionnaire responses of 21 firms that are believed to account for the majority of BB production in the United States. BB producers who responded affirmatively to the questionnaire are: Atlantic, Delphi, Emerson, Hoover, Koyo, Nachi Technology, Nakanishi, New Hampshire, NN, NSK, NSK-AKS Precision Ball, NTN, Pacamor/Kubar, Rexnord, Rockwell, Saint-Gobain, Schaeffler Group, SKF, Timken, Triangle Manufacturing, and Trostel.

U.S. PRODUCERS' CAPACITY, PRODUCTION, AND CAPACITY UTILIZATION

Data on capacity, production, and capacity utilization for BBs are presented in table BB-III-1. Capacity to produce BBs fell steadily by 24.6 percent from 2000 to 2005 while production in 2005 was 37.9 percent below that reported in 2000. Capacity utilization fell from a high of 73.1 percent in 2000 to a period low of 60.2 percent in 2005.[1]

A number of firms reported a net reduction in capacity over the period examined. Reporting firms whose capacity shutdowns accounted for the bulk of the decline shown in table BB-III-1 consisted of the following firms, in order of the magnitude of the reported decrease: ***.[2] As shown in table BB-I-13, NSK has ***.[3] In 2000 and 2003, Timken sold portions of its MPB Corp. assets. In 2003, Timken also sold its Torrington, CT aircraft control BB facility to RBC, a domestic producer that has not provided a full questionnaire response for its BB operations. Timken indicated in its questionnaire response that ***.[4] Likewise, Timken closed its Rockford, IL plant in 2004, citing ***. Koyo has ***. SKF reported the closure of one plant in Altoona, PA in its questionnaire response as well as the consolidation of other of its domestic BB operations.[5] Other plant closures included the Hoover closure of its Washington, IN plant in 2001, the shutdown of the NN facility in Walterboro, SC that produced balls, and NTN's shutdown of its Greensburg, IN plant producing bearings for agricultural equipment. There were also some capacity

---

[1] As shown in the notes to table BB-III-1, the basis on which firms reported capacity varied from a high of 168 hours per week (and 50 weeks per year) for *** to a low of 40 hours per week (and 50 weeks per year) for ***. JBIA argues in its prehearing brief that the "statistical anomalies" associated with the calculations for capacity based on varying work hours should accord less weight to these capacity utilization rates. For example, if ***. JBIA's prehearing brief, p. 69.

[2] JBIA asserts that since over *** percent of the reduction in capacity was attributed to ***, "their decisions to reduce capacity show a vibrant U.S. BB industry responding in a business-appropriate manner to global trends. The industry that has emerged is, and will continue to be, much stronger than it was five years ago." JBIA's prehearing brief, p. 67.

[3] JBIA maintained in its prehearing brief that the decrease in *** capacity "is directly related to the efforts of this company to ***." JBIA's prehearing brief, p. 64.

[4] JBIA argues in its prehearing brief that *** unit reduction in BB production capacity since 2002 is overstated since some of the reduction "must be attributed to ***. JBIA's prehearing brief, p. 65. SKF also counters that RBC's profitability for its BB business is ***, as evidenced by its public SEC filings. SKF's prehearing brief, p. 94.

[5] *** did not provide an explanation of its capacity reductions in its response to the producers' questionnaire. As shown in table BB-I-13, *** did not report any plant changes. Further, the firm does not produce other products on the same equipment and machinery used in the production of certain bearings. ***'s producers' questionnaire response, question II-6. It also reported that it calculated its capacity figures based on "cycle time vs. hours available." ***'s producer questionnaire response, question II-3.

Table BB-III-1
Ball bearings: U.S. producers' capacity, production, and capacity utilization, by firm, 2000-05

Firm	2000	2001	2002	2003	2004	2005
			Capacity (*1,000 complete bearings*)			
Atlantic	***	***	***	***	***	***
Delphi	***	***	***	***	***	***
Emerson	***	***	***	***	***	***
Koyo	***	***	***	***	***	***
Nachi Technology	***	***	***	***	***	***
Nakanishi	***	***	***	***	***	***
New Hampshire	***	***	***	***	***	***
NSK	***	***	***	***	***	***
NTN: ANBM	***	***	***	***	***	***
NTN-BCA	***	***	***	***	***	***
Pacamor/Kubar	***	***	***	***	***	***
Rexnord	***	***	***	***	***	***
Rockwell	***	***	***	***	***	***
Schaeffler Group: Barden	***	***	***	***	***	***
FAG Automotive	***	***	***	***	***	***
FAG Industrial	***	***	***	***	***	***
INA	***	***	***	***	***	***
SKF	***	***	***	***	***	***
Timken	***	***	***	***	***	***
Triangle	***	***	***	***	***	***
Total	448,826	426,262	421,743	396,329	354,689	338,388
			Production (*1,000 complete bearings*)			
Atlantic	***	***	***	***	***	***
Delphi	***	***	***	***	***	***
Emerson	***	***	***	***	***	***
Koyo	***	***	***	***	***	***
Nachi Technology	***	***	***	***	***	***

Table continued on next page.

Table BB-III-1--*Continued*
Ball bearings: U.S. producers' capacity, production, and capacity utilization, by firm, 2000-05

Firm	2000	2001	2002	2003	2004	2005
			Production (*1,000 complete bearings*)			
Nakanishi	***	***	***	***	***	***
New Hampshire	***	***	***	***	***	***
NSK	***	***	***	***	***	***
NTN: ANBM	***	***	***	***	***	***
NTN-BCA	***	***	***	***	***	***
Pacamor/Kubar	***	***	***	***	***	***
Rexnord	***	***	***	***	***	***
Rockwell	***	***	***	***	***	***
Schaeffler Group: Barden	***	***	***	***	***	***
FAG Automotive	***	***	***	***	***	***
FAG Industrial	***	***	***	***	***	***
INA	***	***	***	***	***	***
SKF	***	***	***	***	***	***
Timken	***	***	***	***	***	***
Triangle	***	***	***	***	***	***
Total	328,200	260,793	256,278	242,468	226,236	203,819
			Capacity utilization (*percent*)			
Atlantic	***	***	***	***	***	***
Delphi	***	***	***	***	***	***
Emerson	***	***	***	***	***	***
Koyo	***	***	***	***	***	***
Nachi Technology	***	***	***	***	***	***
Nakanishi	***	***	***	***	***	***
New Hampshire	***	***	***	***	***	***
NSK	***	***	***	***	***	***
NTN: ANBM	***	***	***	***	***	***
NTN-BCA	***	***	***	***	***	***

Table continued on next page.

Table BB-III-1--*Continued*
Ball bearings: U.S. producers' capacity, production, and capacity utilization, by firm, 2000-05

Firm	2000	2001	2002	2003	2004	2005
			Capacity utilization (*percent*)			
Pacamor/Kubar	***	***	***	***	***	***
Rexnord	***	***	***	***	***	***
Rockwell	***	***	***	***	***	***
Schaeffler Group: Barden	***	***	***	***	***	***
FAG Automotive	***	***	***	***	***	***
FAG Industrial	***	***	***	***	***	***
INA	***	***	***	***	***	***
SKF	***	***	***	***	***	***
Timken	***	***	***	***	***	***
Triangle	***	***	***	***	***	***
Average	73.1	61.2	60.8	61.2	63.8	60.2

[1] These data are for complete bearings and exclude parts.

Note.–***.

Source: Compiled from data submitted in response to Commission questionnaires.

expansions within the domestic BB industry during the period examined. In early 2000, New Hampshire completed a new factory in Chatsworth, CA, and, in 2005, also ***.[6]

Table BB-III-2 presents anticipated changes in capacity to produce BBs in 2006 and 2007 reported by U.S. producers in their questionnaire responses.

Table BB-III-2
Ball bearings: Anticipated changes in capacity to produce ball bearings in 2006 and 2007

* * * * * * *

[6] *** indicates in its questionnaire response that the global restructuring of the bearings industry has resulted in the shrinking of the production capacity for high-volume, standard BBs in the United States while the ability to produce high-value, custom BBs has grown albeit at levels "proportionally smaller than the capacity levels normally associated with standard BB production." ***'s producer questionnaire response, question I-3. They state that "{i}n the high-value, custom BB market, competitive attributes like quality, engineering design and application support, logistics, supply chain lead-time, and supply chain risk drive customer demand for high-value, custom BBs. There thus exists hurdles in the high-value, custom BB marketplace that are more easily addressed if a BB company manufactures locally as opposed to overseas." They argue that "{t}he BB industry that has emerged from this global restructuring is much stronger than it was five years ago, especially in the United States." Ibid.

U.S. PRODUCERS' DOMESTIC SHIPMENTS, COMPANY TRANSFERS, AND EXPORT SHIPMENTS

Data on U.S. producers' shipments of BBs and parts are presented in table BB-III-3. The value of U.S. producers' total U.S. shipments of BBs decreased on an overall basis by 10.3 percent from 2000 to 2005. The value of exports fluctuated by about $50 million throughout the period. Internal consumption and transfers to related firms accounted for *** percent and *** percent, respectively, of total shipments of BBs in 2005.[7] Commercial shipments of BB parts to unrelated firms, as shown in table TRB-III-3, accounted for 6.1 percent of the value of commercial shipments of all BBs in 2005. The tabulation below lists U.S. shipments of BB parts, by firm.

Firm	2000	2001	2002	2003	2004	2005
U.S. shipments of BB parts (*$1,000*)						
***[1]	***	***	***	***	***	***
***[1]	***	***	***	***	***	***
***[1]	***	***	***	***	***	***
***[1]	***	***	***	***	***	***
***	***	***	***	***	***	***
***[1]	***	***	***	***	***	***
***[1]	***	***	***	***	***	***
***[1]	***	***	***	***	***	***
***[1]	***	***	***	***	***	***
Total	136,502	106,373	122,213	101,141	100,378	96,598

[1] Firms ship: ***.

[7] ***.

Table BB-III-3
Ball bearings: U.S. producers' shipments, by types, 2000-05

Item	2000	2001	2002	2003	2004	2005
Value of complete bearings *(1,000 dollars)*						
Commercial shipments	1,352,542	1,232,868	1,195,698	1,145,656	1,148,280	1,241,891
Internal shipments	***	***	***	***	***	***
Transfers to related firms	***	***	***	***	***	***
U.S. shipments	1,824,010	1,644,727	1,637,994	1,569,685	1,551,626	1,635,514
Export shipments	178,313	153,014	149,052	152,693	168,398	172,623
Total	2,002,323	1,797,741	1,787,046	1,722,378	1,720,024	1,808,137
Value of bearing parts *(1,000 dollars)*						
Commercial shipments	120,678	93,754	94,866	86,134	84,754	81,376
Internal shipments	***	***	***	***	***	***
Transfers to related firms	***	***	***	***	***	***
U.S. shipments	136,502	106,373	122,213	101,141	100,378	96,598
Export shipments	68,625	57,723	51,475	60,452	71,870	76,022
Total	205,127	164,096	173,688	161,593	172,248	172,620
Value of complete bearings and parts *(1,000 dollars)*						
Commercial shipments	1,473,220	1,326,622	1,290,564	1,231,790	1,233,034	1,323,267
Internal shipments	***	***	***	***	***	***
Transfers to related firms	***	***	***	***	***	***
U.S. shipments	1,960,512	1,751,100	1,760,207	1,670,826	1,652,004	1,732,112
Export shipments	246,938	210,737	200,527	213,145	240,268	248,645
Total	2,207,450	1,961,837	1,960,734	1,883,971	1,892,272	1,980,757
Quantity *(1,000 complete bearings)*						
Commercial shipments	252,544	205,823	192,318	165,690	152,799	140,485
Internal shipments	***	***	***	***	***	***
Transfers to related firms	***	***	***	***	***	***
U.S. shipments	299,253	248,255	235,541	204,805	190,417	174,027
Export shipments	24,966	19,394	20,687	37,421	38,811	31,262
Total	324,219	267,649	256,228	242,226	229,228	205,289

Table continued on next page.

Table BB-III-3--*Continued*
Ball bearings: U.S. producers' shipments, by types, 2000-05

Item	2000	2001	2002	2003	2004	2005
Unit value *(per complete bearing)*						
Commercial shipments	$5.36	$5.99	$6.22	$6.91	$7.51	$8.84
Internal shipments	***	***	***	***	***	***
Transfers to related firms	***	***	***	***	***	***
U.S. shipments	6.10	6.63	6.95	7.66	8.15	9.40
Export shipments	7.14	7.89	7.21	4.08	4.34	5.52
Average	6.18	6.72	6.97	7.11	7.50	8.81
Share of total value *(percent)*						
Commercial shipments	66.7	67.6	65.8	65.4	65.2	66.8
Internal shipments	***	***	***	***	***	***
Transfers to related firms	***	***	***	***	***	***
U.S. shipments	88.8	89.3	89.8	88.7	87.3	87.4
Export shipments	11.2	10.7	10.2	11.3	12.7	12.6
Total	100.0	100.0	100.0	100.0	100.0	100.0

Note.--Values include complete bearings and parts; quantities include only complete bearings; unit values are calculated on the basis of complete bearings only.

Source: Compiled from data submitted in response to Commission questionnaires.

The quantity of U.S. producers' U.S. shipments of complete BBs decreased steadily by 41.8 percent from 2000 to 2005. The magnitude of the drop-off in the quantity is much larger than the drop-off in the value of complete BBs, which only fell by 10.3 percent during the period examined. The unit values of U.S. shipments of BBs increased steadily from $6.10 per complete bearing in 2000 to $9.40 per complete bearing in 2005. Unit values reported by individual manufacturers varied widely, from less than $1.00 per bearing to over $100.00 per bearing. [8]

U.S. PRODUCERS' INVENTORIES

U.S. producers' inventories of BBs decreased irregularly by 29.0 percent from 2000-05, as shown in table BB-III-4. The ratios of inventories to production, U.S. shipments, and total shipments remained between 10 percent and 15 percent throughout the period examined.

[8] JBIA argues in its prehearing brief that, although U.S. BB shipments experienced a decline, the increase in unit values "demonstrate{s} the existence of a strong domestic BB industry growing stronger with each year that passes." JBIA's prehearing brief, p. 67.

Table BB-III-4
Ball bearings: U.S. producers' end-of-period inventories, 2000-05

Item	2000	2001	2002	2003	2004	2005
Inventories (*1,000 complete bearings*)	35,676	28,923	29,091	29,476	26,639	25,316
Ratio to production (*percent*)	10.9	11.1	11.4	12.2	11.8	12.4
Ratio to U.S. shipments (*percent*)	11.9	11.7	12.4	14.4	14.0	14.5
Ratio to total shipments (*percent*)	11.0	10.8	11.4	12.2	11.6	12.3

[1] These data are for complete bearings and exclude parts.

Source: Compiled from data submitted in response to Commission questionnaires.

U.S. PRODUCERS' IMPORTS

Data on U.S. producers' imports of complete BBs from all sources are presented in table BB-III-5A.

Table BB-III-5A
Ball bearings: U.S. producers' (and affiliated firms') subject U.S. imports, U.S. production, and ratio of subject U.S. imports to production, by firm, 2000-05

* * * * * * *

Data were calculated on the basis of quantity in order to provide a basis of comparison to U.S. production. For some firms, however, there may well be substantial differences in product mix between their U.S. imports and domestic production. Further, as shown in the notes, the quantity figures do not measure any U.S. imports of BB parts (which are provided in table BB-III-5B). Firms provided the following reasons for importing subject BBs in response to question II-2 in the importers' questionnaire.

* * * * * * *

Table BB-III-5B presents the value of U.S. producers' imports of BB parts from all sources.

Table BB-III-5B
Ball bearings: U.S. producers' (and affiliated firms') U.S. imports of BB parts from all sources, by firm, 2000-05

* * * * * * *

U.S. PRODUCERS' PURCHASES

Data on U.S. producers' purchases of BBs are presented in table BB-III-6.

Table BB-III-6
Ball bearings: U.S. producers' purchases, 2000-05

Item	2000	2001	2002	2003	2004	2005
	(*Value in 1,000 dollars*)					
Purchases from France	***	***	***	***	***	***
Purchases from Germany	***	***	***	***	***	***
Purchases from Italy	***	***	***	***	***	***
Purchases from Japan	***	***	***	***	***	***
Purchases from Singapore	***	***	***	***	***	***
Purchases from the United Kingdom	***	***	***	***	***	***
Subtotal	***	***	***	***	***	***
Purchases from nonsubject countries	***	***	***	***	***	***
Purchases from domestic producers	***	***	***	***	***	***
Purchases from other sources	***	***	***	***	***	***
Total	27,440	25,217	32,177	29,527	34,688	37,192

Note.–Values include complete bearings and parts.

Source: Compiled from data submitted in response to Commission questionnaires.

U.S. PRODUCERS' EMPLOYMENT, WAGES, AND PRODUCTIVITY

The average number of PRWs producing BBs and parts decreased steadily from 10,885 workers in 2000 to 8,424 workers in 2005, or by 22.6 percent. The number of hours worked and wages paid fell by 21.0 percent and 9.0 percent, respectively, from 2000 to 2005. Hourly wages rose from $18.19 per hour in 2000 to $20.97 per hour in 2005. Productivity fell by 21.5 percent and unit labor costs rose by 49.5 percent. Data on employment, wages, and productivity are presented in table BB-III-7.

Table BB-III-7
Average number of production and related workers producing BBs, hours worked, wages paid to such employees, hourly wages, productivity, and unit labor costs, 2000-05

Item	2000	2001	2002	2003	2004	2005
Production and related workers	10,885	9,994	9,390	9,012	8,480	8,424
Hours worked (*1,000*)	21,247	19,696	18,683	17,562	16,678	16,780
Wages paid (*$1,000*)	386,529	362,390	368,757	356,244	342,468	351,831
Hourly wages	$18.19	$18.40	$19.74	$20.28	$20.53	$20.97
Productivity (*bearings per hour*)	17.2	14.6	15.2	15.4	15.2	13.5
Unit labor costs (*per bearing*)	$1.07	$1.28	$1.33	$1.35	$1.39	$1.60

Note.–Number of PRWs, hours worked, wages paid, and hourly wages are related to the production of complete bearings and parts; productivity and unit labor costs are calculated on the basis of complete bearings only.

Source: Compiled from data submitted in response to Commission questionnaires.

FINANCIAL EXPERIENCE OF U.S. PRODUCERS

Background

Twenty producers[9] provided useable financial results on their BB operations; the producers all operated continuously from 2000 through 2005. These firms are believed to account for the majority of the domestic industry's production volume in 2005. Based upon shipment data, sales of parts represented approximately *** percent of sales value in every period. *** reported internal consumption (which accounted for *** percent of sales quantities but *** percent of sales values in every period), and six firms reported transfers to related parties (which accounted for *** percent of sales quantities but *** percent of sales values in every period).

U.S. Producers' BB Operations

Aggregate income-and-loss data for the domestic producers on their operations producing BBs are presented in table BB-III-8. These results declined almost steadily from 2000 to 2004, with the domestic producers reporting decreased sales quantities and values and decreased operating profits in virtually every period. Although sales values and operating profits both increased in 2005, they were still substantially below 2000 levels. From 2000 to 2005, net sales quantities declined by 39 percent, net sales values were down by approximately 12 percent, and operating profits were off by $125 million as the industry went from an operating margin of 6.1 percent to virtually breakeven. Moreover, the declines were across the board, as all 16 producers that reported sales quantities reported decreased sales quantities from 2000 to 2005, 16 of the 20 producers reported decreased sales values, and 16 of the 20 reported decreased operating profits (or increased operating losses).

Unit sales values increased by approximately 46 percent from 2000 to 2005, with approximately half of the increase occurring from 2000 to 2004 and the other half occurring from 2004 to 2005. Much like the decreases in sales and operating income described above, the increase in unit sales values was virtually industry-wide, as 14 of the 16 producers reporting sales quantity data reported higher unit sales values in 2005 than in 2000. This increase in unit sales values did not keep pace with rising unit costs, as every operating cost component (particularly unit raw materials (66 percent increase) and unit other factory costs (48 percent increase)) also increased. While three producers (***) accounted for the bulk of the increase in unit operating costs from 2000 to 2005, the increases were nonetheless widespread, as 15 of the 16 producers reporting sales quantity data reported higher unit operating costs.

Selected financial data on a company-by-company basis are presented in table BB-III-9. While no one producer dominated the industry, the aggregate results were heavily influenced by aforementioned three producers – *** – which accounted for a little less than half of the sales values in every period. In particular, these producers accounted for $*** of the $125 million decrease in operating profits from 2000 to 2005. ***,[10] reported operating profits early on, but then large losses in 2005. The company ***. ***, a producer whose unit sales values were among the lowest, also sells the bulk of its BBs to the auto

[9] The producers and their fiscal year ends are: ***.

[10] Delphi's Form 10-K for the period ending December 31, 2004 at 7.

Table BB-III-8
Ball bearings: Results of operations of U.S. producers,[1] fiscal years 2000-05

Item	Fiscal year					
	2000	2001	2002	2003	2004	2005
	Quantity (*1,000 bearings or bearing equivalents*)					
Net sales quantities:						
Commercial	275,807	223,733	211,772	201,643	188,774	169,041
Internal consumption	***	***	***	***	***	***
Related party transfers	***	***	***	***	***	***
Total	338,110	279,081	263,135	252,197	230,651	205,970
	Value (*1,000 dollars*)					
Net sales values:						
Commercial	1,690,826	1,504,698	1,470,084	1,413,307	1,413,101	1,514,735
Internal consumption	***	***	***	***	***	***
Related party transfers	***	***	***	***	***	***
Total	2,160,191	1,929,613	1,912,983	1,848,649	1,810,191	1,901,786
Cost of goods sold:						
Raw materials	705,237	621,297	651,210	654,624	654,119	709,149
Direct labor	256,378	233,852	233,227	225,756	222,545	224,642
Other factory costs	840,221	806,095	752,497	747,978	746,681	749,381
Total cost of goods sold	1,801,836	1,661,244	1,636,934	1,628,358	1,623,345	1,683,172
Gross profit	358,355	268,369	276,049	220,291	186,846	218,614
SG&A expenses	226,386	211,244	215,185	205,527	195,546	211,270
Operating income or (loss)	131,969	57,125	60,864	14,764	(8,700)	7,344
Interest expense	19,458	20,105	17,110	10,237	7,952	8,949
All other expense items	13,932	16,896	7,049	3,150	5,448	28,449
CDSOA (Byrd Amendment)	0	73,834	79,007	50,966	39,048	63,967
All other income items	8,838	8,428	8,247	6,536	8,929	8,743
Other expense/(income), net	24,552	(45,261)	(63,095)	(44,115)	(34,577)	(35,312)
Net income before taxes	107,417	102,386	123,959	58,879	25,877	42,656
Depreciation/amortization	113,186	111,882	109,324	108,079	110,528	101,223
Cash flow	220,603	214,268	233,283	166,958	136,405	143,879

Table continued on next page.

Table BB-III-8--*Continued*
Ball bearings: Results of operations of U.S. producers,[1] fiscal years 2000-05

Item	Fiscal year					
	2000	2001	2002	2003	2004	2005
	Number of firms reporting					
Operating losses	2	6	6	7	7	7
Data	20	20	20	20	20	20
	Ratio to net sales (*percent*)					
Cost of goods sold:						
Raw materials [2]	32.6	32.2	34.0	35.4	36.1	37.3
Direct labor	11.9	12.1	12.2	12.2	12.3	11.8
Other factory costs	38.9	41.8	39.3	40.5	41.2	39.4
Total cost of goods sold	83.4	86.1	85.6	88.1	89.7	88.5
Gross profit	16.6	13.9	14.4	11.9	10.3	11.5
SG&A expenses	10.5	10.9	11.2	11.1	10.8	11.1
Operating income or (loss)	6.1	3.0	3.2	0.8	(0.5)	0.4
	Unit value (*dollars per bearing or bearing equivalent*) [4]					
Net sales values:						
Commercial	5.56	6.18	6.36	6.41	6.84	8.24
Internal consumption	***	***	***	***	***	***
Related party transfers	***	***	***	***	***	***
Average	5.92	6.47	6.80	6.85	7.31	8.64
Cost of goods sold:						
Raw materials	1.96	2.11	2.34	2.46	2.68	3.26
Direct labor	0.71	0.79	0.83	0.84	0.91	1.03
Other factory costs	2.30	2.70	2.67	2.76	3.03	3.41
Total cost of goods sold	4.97	5.60	5.84	6.06	6.61	7.70
Gross profit	0.95	0.88	0.96	0.79	0.70	0.94
SG&A expenses	0.63	0.72	0.78	0.78	0.80	0.98
Operating income or (loss)	0.32	0.16	0.18	0.01	(0.10)	(0.03)

Notes on next page.

Continuation.

[1] The producers are ***.
[2] Raw materials were approximately *** percent imported and *** percent domestic every period.
[3] Calculated only from the data of those producers providing both quantity and value data. Producers not providing quantity data accounted for 6 to 7 percent of sales values in every period. Also, given the large differences between the individual producers' unit sales values and unit costs (table BB-III-9), it may be more appropriate to view percentage changes in average unit values as opposed to the absolute value of the changes.
[4] While the absolute value of the 2005 operating income is positive, the unit value is negative because some of the producers not reporting sales quantities had positive income, and the exclusion of their operating profits resulted in the industry reporting losses.

Source: Compiled from data submitted in response to Commission questionnaires.

industry.[11] The company posted ***. ***, which sold a sizable portion of its BBs to the auto industry,[12] reported ***.[13] At the other end of the operating income spectrum were ***.

Table BB-III-9
Ball bearings: Selected financial data of U.S. producers on a company-by-company basis, fiscal years 2000-05

* * * * * * *

Given the wide variation in product mix, a variance analysis is not presented.

Capital Expenditures and Research and Development Expenses

Domestic BB producers' capital expenditures and R&D expenses are presented in table BB-III-10. Virtually every producer reported some level of expenditures, with *** reporting the largest amounts.

Aggregate R&D expenses were largely attributable to ***. In many periods, *** R&D expenditures approximated its capital expenditures.

Assets and Return on Investment

Data on domestic BB producers' assets and their return on investment (defined as operating income divided by total assets) are presented in table BB-III-11. Total asset values declined steadily from 2000 to 2005. The return on investment mirrored the domestic BB producers' operating income margins.

[11] *** U.S. producer questionnaire response, section II-12a.

[12] *** U.S. producer questionnaire response, section II-12a.

[13] Commission staff asked *** about its *** and, especially in view of *** overall profitability, asked if *** had taken any steps to make its U.S. bearing operations ***. *** replied that a *** of its domestic *** production is ***, which generates low profit margins. *** reported in its U.S. producers' questionnaire, a decision has been made to ***." *** also noted that the bearings it produces for segments outside of the Commission's review ***. E-mail from ***, May 8, 2006.

Table BB-III-10
Ball bearings: U.S. producers' capital expenditures and research and development expenses, fiscal years 2000-05

Item	Fiscal year					
	2000	2001	2002	2003	2004	2005
	Value (*$1,000*)					
Capital expenditures:						
Delphi	***	***	***	***	***	***
Emerson	***	***	***	***	***	***
Hoover	***	***	***	***	***	***
Koyo/KCU	***	***	***	***	***	***
Nachi Technology/NTI	***	***	***	***	***	***
Nakanishi	***	***	***	***	***	***
New Hampshire	***	***	***	***	***	***
NN	***	***	***	***	***	***
NSK-ASK Precision	***	***	***	***	***	***
NSK	***	***	***	***	***	***
NTN-USA	***	***	***	***	***	***
Pacamor/Kubar	***	***	***	***	***	***
Rexnord	***	***	***	***	***	***
Rockwell	***	***	***	***	***	***
Schaeffler - INA	***	***	***	***	***	***
Schaeffler - Barden	***	***	***	***	***	***
Schaeffler - FAG	***	***	***	***	***	***
SKF	***	***	***	***	***	***
Timken	***	***	***	***	***	***
Triangle	***	***	***	***	***	***
Total	107,706	133,884	79,757	83,238	65,339	77,215

Table continued on next page.

Table BB-III-10--*Continued*
Ball bearings: U.S. producers' capital expenditures and research and development expenses, fiscal years 2000-05

Item	Fiscal year					
	2000	2001	2002	2003	2004	2005
	Value (*$1,000*)					
Research and development expenditures:						
Delphi	***	***	***	***	***	***
Emerson	***	***	***	***	***	***
Hoover	***	***	***	***	***	***
Koyo/KCU	***	***	***	***	***	***
Nachi Technology/NTI	***	***	***	***	***	***
Nakanishi	***	***	***	***	***	***
New Hampshire	***	***	***	***	***	***
NN	***	***	***	***	***	***
NSK-ASK Precision	***	***	***	***	***	***
NSK	***	***	***	***	***	***
NTN-USA	***	***	***	***	***	***
Pacamor/Kubar	***	***	***	***	***	***
Rexnord	***	***	***	***	***	***
Rockwell	***	***	***	***	***	***
Schaeffler - INA	***	***	***	***	***	***
Schaeffler - Barden	***	***	***	***	***	***
Schaeffler - FAG	***	***	***	***	***	***
SKF	***	***	***	***	***	***
Timken	***	***	***	***	***	***
Triangle	***	***	***	***	***	***
Total	14,509	15,067	13,751	15,895	13,699	15,582

Source: Compiled from data submitted in response to Commission questionnaires.

Table BB-III-11
Ball bearings: U.S. producers' value of assets and return on investment, fiscal years 2000-05

Item	Fiscal year					
	2000	2001	2002	2003	2004	2005
	Value (*$1,000*)					
Total assets:						
Current assets:						
Cash and equivalents	10,044	8,021	11,540	7,960	(4,957)	7,222
Accounts receivable	173,023	161,664	156,517	170,166	171,256	167,324
Inventories	350,100	330,209	309,456	290,618	287,766	293,347
Other	50,265	42,172	64,482	51,029	46,716	60,694
Total current assets	583,432	542,066	541,995	519,773	500,781	528,587
Non-current assets:						
Original cost of property, plant, and equipment	1,899,092	1,945,333	1,915,094	1,829,326	1,838,523	1,844,830
Less accumulated depreciation	1,137,122	1,194,214	1,198,994	1,145,583	1,203,287	1,229,357
Equals book value of property, plant, and equipment	761,970	751,119	716,100	683,743	635,236	615,473
Other	190,098	205,533	204,931	246,260	266,700	256,370
Total non-current assets	952,068	956,652	921,031	930,003	901,936	871,843
Total assets	1,535,500	1,498,718	1,463,026	1,449,776	1,402,717	1,400,430
Operating income	131,969	57,125	60,864	14,764	(8,700)	7,344
	Ratio of operating income to total assets (*percent*)					
Return on investment	8.6	3.8	4.2	1.0	(0.6)	0.5

Source: Compiled from data submitted in response to Commission questionnaires.

PART IV: U.S. IMPORTS AND THE INDUSTRIES IN FRANCE, GERMANY, ITALY, JAPAN, SINGAPORE, AND THE UNITED KINGDOM

U.S. IMPORTS

Official import statistics on BBs are presented in table BB-IV-1. As shown in the notes to table BB-IV-1, the statistics were adjusted to subtract imports from manufacturers/exporters that have been excluded from the antidumping duty orders on BBs from France, Germany, Italy, Japan, and the United Kingdom.[1] Commerce data were further adjusted to subtract product that has been excluded from the orders in scope determinations or is not subject to the order (i.e., is a product other than BBs). The tabulation below lists the specific adjustments that were made to Commerce data.

* * * * * * *

The value of subject imports of BBs decreased steadily by 26.6 percent from 2000 to 2003 and then rose by 12.5 percent from 2003 to 2004 and by 7.6 percent from 2004 to 2005 for an overall period decrease of 11.1 percent (table BB-IV-1). Imports from Japan alone are larger than imports from all other subject countries combined. With the exception of subject imports from Germany, the value of U.S. imports of BBs from each subject source declined over the period examined.[2] The largest decline in both absolute and proportionate terms was for imports from Singapore. NMB Technologies/NMBTC is *** the only importer of subject BBs from Singapore. It confirmed in its questionnaire response that its imports have fallen *** and attributed this to ***.[3] The value of nonsubject imports rose by 20.9 percent over the 2000-05 period. Imports from nonsubject sources accounted for somewhat more than one-half of the total value of imports at the beginning of the period examined and by the end of the period accounted for almost twice the value of subject imports. China and Canada are the largest nonsubject suppliers of BBs to the United States for which separate data are shown in table BB-IV-1.

---

[1] No foreign producers/exporters have been excluded for the order covering BBs from Singapore.

[2] There are some discrepancies in the trends of imports from (adjusted) official Commerce statistics shown in table IV-BB-1 and imports compiled from questionnaire data.
(1) With respect to Italy, the value of subject U.S. imports (including parts) are shown as falling from $21.8 million in 2000 to $20.6 million in 2005 in table IV-BB-1, but declined by a greater magnitude using questionnaire data from $*** in 2000 to $*** in 2005. There are *** substantial importers of BBs from Italy: *** (which has submitted a questionnaire response) and *** which have not responded). The aggregate questionnaire data for Italy reflects, ***, data provided by *** whose values of U.S. imports fell from $*** in 2000 to $*** in 2005. ***'s importer questionnaire response, section II-8a.
(2) With respect to Japan, the value of total U.S. imports (including parts) are shown as falling from $277.5 million in 2000 to $253.4 million in 2005 in table IV-BB-1, but <u>increase</u> using questionnaire data from $159.9 million in 2000 to $208.7 million in 2005.

[3] NMB Technologies' importer questionnaire response, section II-11.

Table BB-IV-1
Ball bearings: U.S. imports, by sources, 2000-05

Source	2000	2001	2002	2003	2004	2005
	Value of complete bearings and parts *(1,000 dollars)*					
U.S. subject imports from –						
France	27,008	25,788	22,549	22,029	25,014	23,807
Germany	36,814	33,978	30,174	33,779	45,071	51,816
Italy	21,813	18,559	32,185	33,417	33,321	20,556
Japan	277,538	231,115	204,350	191,413	218,125	253,389
Singapore[1]	35,033	26,994	21,291	12,362	6,681	3,473
United Kingdom	11,768	10,817	8,074	8,219	10,487	11,284
Subtotal	409972.79	347,252	318,622	301,219	338,699	364,325
U.S. nonsubject imports from--						
France (SNFA France)	***	***	***	***	***	***
Germany (Paul Mueller)	***	***	***	***	***	***
Italy (Somecat)	***	***	***	***	***	***
Japan (Honda)	***	***	***	***	***	***
UK (SNFA UK)	***	***	***	***	***	***
Canada	124,698	118,756	127,045	102,067	106,534	105,476
China	126,242	127,950	137,685	125,625	158,455	179,043
All others	244,344	209,726	224,971	252,852	304,911	323,270
Subtotal nonsubject	534,592	483,191	514,569	506,499	601,536	646,355
Total imports	944,566	830,443	833,192	807,718	940,234	1,010,680
	Quantity *(1,000 complete bearings)*					
U.S. subject imports from –						
France	2,026	2,198	1,912	1,881	2,110	1,669
Germany	5,086	4,124	4,067	2,524	2,419	3,668
Italy	2,074	2,817	2,954	3,519	2,773	1,916
Japan	66,050	52,514	47,885	42,999	47,423	53,456
Singapore[1]	74,010	62,935	49,424	30,797	18,333	7,485
United Kingdom	2,731	783	441	320	440	298
Subtotal	151,978	125,370	106,683	82,041	73,499	68,492

Table continued on next page.

Table BB-IV-1--*Continued*
Ball bearings: U.S. imports, by sources, 2000-05

Source	2000	2001	2002	2003	2004	2005
Quantity *(1,000 complete bearings)*						
U.S. nonsubject imports from--						
France (SNFA France)	***	***	***	***	***	***
Germany (Paul Mueller)	***	***	***	***	***	***
Italy (Somecat)	***	***	***	***	***	***
Japan (Honda)	***	***	***	***	***	***
UK (SNFA UK)	***	***	***	***	***	***
Canada	69,930	59,064	63,726	53,540	54,106	46,041
China	256,968	268,684	285,369	228,043	265,183	276,197
All others	218,193	179,871	182,456	210,098	252,547	243,025
Subtotal nonsubject	553,312	514,317	538,501	498,979	579,959	573,486
Total imports	705,290	639,687	645,184	581,020	653,458	641,978
Unit value *(per complete bearing)*						
U.S. subject imports from –						
France	$12.66	$10.64	$11.03	$10.81	$10.49	$11.38
Germany	3.90	4.80	4.43	6.46	7.19	6.56
Italy	9.10	5.35	9.80	8.84	11.85	10.44
Japan	3.30	3.56	3.28	3.49	3.64	3.75
Singapore[1]	0.47	0.43	0.43	0.47	0.57	0.90
United Kingdom	2.32	3.93	4.87	4.37	4.08	4.28
Subtotal	2.16	2.26	2.39	2.94	3.59	4.01
U.S. nonsubject imports from--						
France (SNFA France)	***	***	***	***	***	***
Germany (Paul Mueller)	***	***	***	***	***	***
Italy (Somecat)	***	***	***	***	***	***
Japan (Honda)	***	***	***	***	***	***
UK (SNFA UK)	***	***	***	***	***	***
Canada	1.70	1.91	1.91	1.81	1.89	2.21
China	0.46	0.44	0.44	0.49	0.52	0.56
All others	1.05	1.08	1.12	1.09	1.09	1.23
Subtotal nonsubject	0.91	0.88	0.89	0.93	0.94	1.04
Total imports	1.19	1.15	1.14	1.22	1.26	1.37

Table continued on next page.

Table BB-IV-1--*Continued*
Ball bearings: U.S. imports, by sources, 2000-05

Source	2000	2001	2002	2003	2004	2005
			Share of value *(percent)*			
U.S. subject imports from –						
France	2.9	3.1	2.7	2.7	2.7	2.4
Germany	3.9	4.1	3.6	4.2	4.8	5.1
Italy	2.3	2.2	3.9	4.1	3.5	2.0
Japan	29.4	27.8	24.5	23.7	23.2	25.1
Singapore[1]	3.7	3.3	2.6	1.5	0.7	0.3
United Kingdom	1.2	1.3	1.0	1.0	1.1	1.1
Subtotal	43.4	41.8	38.2	37.3	36.0	36.0
U.S. nonsubject imports from--						
France (SNFA France)	***	***	***	***	***	***
Germany (Paul Mueller)	***	***	***	***	***	***
Italy (Somecat)	***	***	***	***	***	***
Japan (Honda)	***	***	***	***	***	***
UK (SNFA UK)	***	***	***	***	***	***
Canada	13.2	14.3	15.2	12.6	11.3	10.4
China	13.4	15.4	16.5	15.6	16.9	17.7
All others	25.9	25.3	27.0	31.3	32.4	32.0
Subtotal nonsubject	56.6	58.2	61.8	62.7	64.0	64.0
Total imports	100.0	100.0	100.0	100.0	100.0	100.0
			Share of quantity *(percent)*			
U.S. subject imports from –						
France	0.3	0.3	0.3	0.3	0.3	0.3
Germany	0.7	0.6	0.6	0.4	0.4	0.6
Italy	0.3	0.4	0.5	0.6	0.4	0.3
Japan	9.4	8.2	7.4	7.4	7.3	8.3
Singapore[1]	10.5	9.8	7.7	5.3	2.8	1.2
United Kingdom	0.4	0.1	0.1	0.1	0.1	0.0
Subtotal	21.5	19.6	16.5	14.1	11.2	10.7

Table continued on next page.

Table BB-IV-1--*Continued*
Ball bearings: U.S. imports, by sources, 2000-05

Source	2000	2001	2002	2003	2004	2005
			Share of quantity *(percent)*			
U.S. nonsubject imports from--						
France (SNFA France)	***	***	***	***	***	***
Germany (Paul Mueller)	***	***	***	***	***	***
Italy (Somecat)	***	***	***	***	***	***
Japan (Honda)	***	***	***	***	***	***
UK (SNFA UK)	***	***	***	***	***	***
Canada	9.9	9.2	9.9	9.2	8.3	7.2
China	36.4	42.0	44.2	39.2	40.6	43.0
All others	30.9	28.1	28.3	36.2	38.6	37.9
Subtotal nonsubject	78.5	80.4	83.5	85.9	88.8	89.3
Total imports	100.0	100.0	100.0	100.0	100.0	100.0

[1] NMB urges the Commission to utilize data on U.S. imports from Singapore submitted by NMBTC rather than official Commerce statistics since NMBTC "accounts for all imports that should be classified as subject BBs from Singapore." NMB's prehearing brief, pp. 2-6. As shown in the above tabulation describing the adjustments made to Commerce data, staff has, however, subtracted out nonsubject imports for firms that assemble BBs in Singapore (***). NMB respondents note that "there were only minor differences on a yearly basis between the adjusted import statistic quantities {reported in the prehearing report and which (except for a slight adjustment to one year) have not changed for this final staff report} and the U.S. shipment quantities reported by NMBTC in its questionnaire response." Ibid., p. 3.

Note.– Data are based on official Commerce statistics entered under HTS items 8482.10.1040, 8482.10.1080, 8482.10.5004, 8482.10.5008, 8482.10.5016, 8482.10.5024, 8482.10.5028, 8482.10.5032, 8482.10.5036, 8482.10.5044, 8482.10.5048, 8482.10.5052, 8482.10.5056, 8482.10.5060, 8482.10.5064, 8482.10.5068, 8482.80.0020, 8482.80.0040, 8482.80.0080, 8482.91.0010, 8482.91.0020, 8482.99.0500, 8482.99.3500, 8483.20.4040, and 8483.20.8040. The import data were adjusted to reflect the revocation of the BB orders on SNFA France (France), Paul Mueller (Germany), Somecat (Italy), Honda (Japan), and SNFA UK (UK). Imports for the excluded sources are included in the table as nonsubject imports. The import data were also adjusted to subtract products reported by firms in their questionnaire responses to (1) have been excluded by Commerce in a scope determination and/or (2) be entered under the above-listed HTS items but which are not subject to the orders (i.e., are products other than BBs). Import data are overstated by the volume of any excluded or nonsubject products not identified in questionnaire responses but may also be understated by the volume of any subject product entered under HTS items other than those cited here.

Values are landed, duty-paid, and include complete bearings and parts; quantities are derived from the HTS items that are believed to measure only complete bearings (i.e., exclude the HTS items for bearing balls, other ball bearing parts, and inner or outer rings or races for BBs but include the HTS items 8483.20.4040 for flange, take-up, and cartridge units incorporating BBs and 8483.20.8040 for other housed bearings incorporating BBs). Unit values are calculated on the basis of complete bearings only.

Source: Compiled from data submitted in response to Commission questionnaires and from official Commerce statistics.

Domestic interested parties indicate that the increase in TRB imports from what were subject countries since the revocation of certain of the TRB antidumping orders in 2000 (*see* part TRB-IV of this report) is indicative of what will happen to subject BB imports should antidumping orders be revoked.[4] In response to projected BB import increases in light of the recent increases in TRB imports, JBIA asserts that the revocation of antidumping orders on BBs would not generate the same increases in imports experienced by TRBs since "different factors govern the BB industry today as compared to the TRB industry in 2000."[5] Similarly, SKF maintains that "the high degree of heterogeneity of the product and market means that revocation will not lead, as Timken and others claim, to reversals of trade flows that have developed across decades, deteriorating into a "race to the bottom" with Chinese imports."[6] Furthermore, JBIA maintains that the increase in TRB imports since 2000 was not attributable to the revocation of order, but rather due to a significant increase in U.S. demand that was unmet by domestic TRB production.[7] JBIA also highlights in its posthearing brief (p. 22) that it is "inappropriate" for Timken to claim that the increase in TRB imports was a result of the revocation of antidumping orders since they assert a significant portion of increase in TRB imports was "attributable to an increase in imports of TRB parts by or on behalf of Timken." *See* the data on Timken's TRB imports from Japan presented both in table TRB-III-5 and in note 2 to table TRB-IV-1.[8]

Table BB-IV-1 also presents quantity data and unit values. The quantity of subject imports of BBs decreased steadily by 54.9 percent from 2000 to 2005. Imports, in terms of quantity, fell on an overall basis for each subject source, including Germany (for which the value of U.S. imports increased) over the period. The unit value of complete bearings from Germany rose from $3.90 per bearing in 2000 to $6.56 per bearing in 2005. The tabulation below presents unit values calculated from data provided in response to the importer questionnaires for complete bearings subject to the orders. Unit values of BBs from *** were ***. Counsel for NMB/Pelmec submit in their prehearing brief (pp. 18-19) that subject Singapore BBs consist of an "entirely different product mix than other subject imports," supporting the assertion that imports from Singapore "currently face and are likely to face different conditions of competition."

---

[4] For example, the domestic interested parties point out that U.S. imports of TRBs from Japan increased by 218 percent by value and 105 percent by volume between 2000 and 2005. Domestic interested parties' prehearing brief, pp. 23-25. Table TRB-IV-1 of this staff report does show a value increase of 218.0 percent while the rise in quantity has been revised downward to 61.6 percent since the prehearing report.

[5] JBIA's posthearing brief, p. 17.

[6] SKF's posthearing brief, p. 4.

[7] JBIA argues that the noticeable increase in TRB imports from Japan did not begin until 2003 and that the reason for that increase was due to an "unusually high customer demand and inadequate supply in the United States" that forced U.S. TRB customers to import from Japan and other countries. JBIA's posthearing brief, pp. 17-19.

[8] JBIA states that the data submitted by Timken show what they label a *** in imports in 2004 and 2005 and assert that "this is probably because they do not tell the full story." They include import data obtained from PIERS that show larger values for "imports of bearing parts for which Timken was either the importer, consignee or otherwise designed on the reported information." JBIA's posthearing brief, p. 21.

Source	2000	2001	2002	2003	2004	2005
Unit value (*per complete bearing*)						
France	$***	$***	$***	$***	$***	$***
Germany	4.36	5.12	4.90	5.88	6.77	7.96
Italy	***	***	***	***	***	***
Japan	2.68	3.94	3.64	3.61	3.66	3.86
Singapore	***	***	***	***	***	***
United Kingdom	***	***	***	***	***	***
Average	1.67	2.08	2.28	2.63	3.27	3.80

U.S. IMPORTERS' INVENTORIES

U.S. importers' inventories of BBs are presented in table BB-IV-2. Reported inventories of imports from subject countries declined on an overall basis by 13.3 percent from 2000 to 2005. The ratio of inventories of subject product to imports rose irregularly from 16.7 percent in 2000 to 34.4 percent in 2005.[9]

Table BB-IV-2
Ball bearings: U.S. importers' end-of-period inventories of imports, by sources, 2000-05[1]

Item	2000	2001	2002	2003	2004	2005
Imports from France:						
Inventories (*1,000 complete bearings*)	***	***	***	***	***	***
Ratio to imports (*percent*)	***	***	***	***	***	***
Ratio to U.S. shipments of imports (*percent*)	***	***	***	***	***	***
Imports from Germany:						
Inventories (*1,000 complete bearings*)	***	***	***	***	***	***
Ratio to imports (*percent*)	***	***	***	***	***	***
Ratio to U.S. shipments of imports (*percent*)	***	***	***	***	***	***
Imports from Italy:						
Inventories (*1,000 complete bearings*)	***	***	***	***	***	***
Ratio to imports (*percent*)	***	***	***	***	***	***
Ratio to U.S. shipments of imports (*percent*)	***	***	***	***	***	***

Table continued on next page.

[9] SKF argues in its posthearing brief that due to the heterogenous nature of BBs, it is "a relatively high inventory industry" and since it is not economically feasible to produce in small volumes, companies produce in lots and carry inventory until orders are received. SKF's posthearing brief, pp. 27-28.

Table BB-IV-2--*Continued*
Ball bearings: U.S. importers' end-of-period inventories of imports, by sources, 2000-05

Item	2000	2001	2002	2003	2004	2005
Imports from Japan:[2]						
Inventories (*1,000 complete bearings*)	16,719	21,695	19,150	16,704	14,523	14,662
Ratio to imports (*percent*)	36.1	50.9	46.5	48.8	35.5	35.1
Ratio to U.S. shipments of imports (*percent*)	36.0	51.6	44.6	46.3	34.4	35.9
Imports from Singapore:						
Inventories (*1,000 complete bearings*)	***	***	***	***	***	***
Ratio to imports (*percent*)	***	***	***	***	***	***
Ratio to U.S. shipments of imports (*percent*)	***	***	***	***	***	***
Imports from the United Kingdom:						
Inventories (*1,000 complete bearings*)	***	***	***	***	***	***
Ratio to imports (*percent*)	***	***	***	***	***	***
Ratio to U.S. shipments of imports (*percent*)	***	***	***	***	***	***
Imports from subject sources:						
Inventories (*1,000 complete bearings*)	21,804	27,649	24,339	23,823	18,820	18,905
Ratio to imports (*percent*)	16.7	24.1	24.7	32.9	28.9	34.4
Ratio to U.S. shipments of imports (*percent*)	17.0	24.5	24.2	33.1	27.2	34.9
Imports from all other sources:[3]						
Inventories (*1,000 complete bearings*)	42,423	90,439	32,130	66,611	148,847	245,940
Ratio to imports (*percent*)	37.1	87.3	34.8	37.1	58.4	91.2
Ratio to U.S. shipments of imports (*percent*)	41.6	61.0	21.6	47.4	91.2	143.0
Imports from all sources:						
Inventories (*1,000 complete bearings*)	64,227	118,088	56,469	90,434	167,668	264,846
Ratio to imports (*percent*)	23.9	49.6	26.8	33.3	49.1	75.5
Ratio to U.S. shipments of imports (*percent*)	25.2	42.0	21.0	38.9	65.9	105.0

[1] These data are for complete bearings and exclude parts.
[2] Inventories for *** were not available for ***. EOP inventories reported by the firm were less than *** bearings per period for ***.
[3] Figures do not include inventories manufactured by firms that have been excluded from the antidumping duty orders.

Note.–These data are adjusted to reflect the revocation of the BB orders on SNFA France (France), Paul Mueller (Germany), Somecat (Italy), Honda (Japan), and SNFA UK (UK).

Source: Compiled from data submitted in response to Commission questionnaires.

SUBJECT COUNTRIES' CAPACITY, PRODUCTION, CAPACITY UTILIZATION, DOMESTIC SHIPMENTS, EXPORT SHIPMENTS, AND INVENTORIES

The following tabulation presents aggregate data calculated from responses to the foreign producer/exporter questionnaires on capacity, production, total exports, and exports to the United States in 2005 of BBs subject to the antidumping duty orders.

Source	Capacity	Production	Total exports[1]	Exports to the United States[1]	Capa-city utiliza-tion	Ratio of exports to the United States to--	
						Produc-tion	Total exports
	Quantity (*1,000 bearings*)				(*Percent*)		
France	***	***	***	***	***	***	***
Germany	***[2]	***	***	***	***	***	***
Italy	***	***	***	***	***	***	***
Japan	975,218	965,554	354,402[3]	31,981[3]	99.0	(4)	9.0
Singapore	***	***	***	***	***	***	***
United Kingdom[6]	***	***	***	***	***	***	***
Total	2,388,063	2,246,281	1,343,186	45,683	94.1	2.0	3.4

[1] Figures represent direct exports to the United States by the reporting foreign manufacturer and do not include home market sales that are subsequently exported by non-related firms.
[2] Figures do not include data for *** since the firm was only able to provide partial data.
[3] Figure includes ***.
[4] Not calculated.
[5] Figure includes BBs that ***.
[6] Data for the United Kingdom will not equal that presented later in the section since *** was only able to provide data for 2003-05 and its figures are not included in table BB-IV-9.

As shown, Japan accounted for both the largest share of BB production for the subject countries combined (43.0 percent in 2005) and the largest share of exports of BBs to the United States, in terms of quantity (70.0 percent in 2005). With the exceptions of *** and Japan, the major portion of subject BB production for each subject source was exported to other markets in 2005. Domestic interested parties argue that since European production has an "increased export orientation," representing four of the top ten global exporting countries of BBs, there is an increased likelihood that exports of BBs to the United States from subject producers would increase if the orders are revoked.[10] However, SKF argues that this conclusion is based on the characterization of exports as shipments outside national boundaries by EU producers, but when the "home market" is characterized as the entire European Community EU producers "are not export dependent at all."[11] Capacity utilization, in 2005, was above *** percent for each subject country other than ***. The basis for reported capacity is provided in table BB-IV-3 along with each firm's reported capacity, production, total exports, and exports to the United States. However, domestic interested parties assert that high capacity utilization rates may not signal a lack of excess

[10] Domestic interested parties' prehearing brief, p. 20.

[11] SKF maintains that from an economic standpoint, the "home market" of EU producers is the European Community. SKF's posthearing brief, p. 26.

Table BB-IV-3
Ball bearings: Subject foreign producers' capacity, production, total exports, and exports to the United States in 2005, by source

Firm	Basis for reported capacity	Capa-city	Produc-tion	Total exports	Exports to the United States
		Quantity (*1,000 bearings*)			
Subject manufacturers in France					
SKF France/SKF Aerospace France	***[1]	***	***	***	***
SNR	***	***	***	***	***
Timken France	***	***	***	***	***
Subtotal	--	***	***	***	***
Subject manufacturers in Germany[2]					
Myonic GmbH	***	***	***	***[3]	***[4]
NSK Europe	***	***	***	***	***
NTN Germany	***	***	***	***	***
Schaeffler KG	***	***	***	***	***
SKF Germany	***	***	***	***	***[5]
Timken Germany	***	***	***	***	***
Subtotal	--	***	***	***	***
Subject manufacturers in Italy					
SKF Italy	***[6]	***	***	***	***
Subject manufacturers in Japan					
Asahi	***	***	***	***	***
JTEKT (Koyo)[7]	***	***	***	***[8]	***[8]
Minebea	***	***	***	***	***
Nachi-Fujikoshi	***	***	***	***	***
Nippon Pillow Block	***	***	***	***	***
NSK[9]	***	***	***	***	***
NTN	***	***	***	***	***
Takeshita	***	***	***	***	***
THK	***	***	***	***	***
Subtotal	--	975,218	965,554	354,402	31,981

Table continued on next page.

Table BB-IV-3
Ball bearings: Subject foreign producers' capacity, production, total exports, and exports to the United States in 2005, by source

Firm	Basis for reported capacity	Capa-city	Produc-tion	Total exports	Exports to the United States
Subject manufacturers in Singapore[10]					
NMB/Pelmec	***	***	***	***	***[11]
Subject manufacturers in the United Kingdom[12]					
Barden UK	***	***	***	***	***
Koyo Bearings	***	***	***	***	***
NMB-Minebea UK	***	***	***	***	***
NSK Europe	***	***	***	***	***
SKF UK/ SKF Aeroengine	***	***	***	***	***
Timken UK	***	***	***	***	***
Subtotal	--	***	***	***	***

[1] ***.
[2] Data for Germany will not equal that presented later in this section since *** was only able to provide partial data and its figures are not included in table BB-IV-5.
[3] ***.
[4] ***.
[5] ***.
[6] The basis for reported capacity is for ***.
[7] As discussed in part I, JTEKT was formed on January 1, 2006, due to the merger of Koyo and Toyoda.
[8] ***.
[9] Firm response includes the operations of ***. Firm response also covers the BBs that ***. *See* clarification e-mail from counsel for NSK, April 5, 2006.
[10] Does not include the operations of ***. ***.
[11] Figure includes ***.
[12] Data for the United Kingdom will not equal that presented later in the section since *** was only able to provide data for *** and its figures are not included in table BB-IV-9.

Note 1.–***.

Note 2.–The domestic parties in their prehearing brief (appendix B-6, pp. 3-6) question the accuracy of capacity figures provided by a number of firms producing BBs (in particular those reported for *** by *** and for *** by ***).

Source: Compiled from data submitted in response to Commission questionnaires.
Notes continued on next page.

capacity as varying interpretations of "normal operating levels" are used in calculating production capacity.[12]

[12] Domestic parties maintain that foreign producers are reporting average production capacity based on their interpretations of "normal" operating conditions which ignores the capability of adjusting to favorable changes in market conditions. Domestic interested parties' exhibits to the prehearing brief, section B6, pp. 1-2.

The Industry in France

The French ball bearing industry is, in large part, dominated by foreign firms, such as SKF (Sweden) and INA (Germany).[13] Another producer, SNR, is a subsidiary of the French automaker Renault. A fourth manufacturer, SNFA France, is a privately held company and produces BBs primarily for the aerospace industry.[14] As indicated earlier, SNFA France has been excluded from the antidumping duty order.[15]

The industry is reported to be facing rising material costs that may lead to continued restructuring.[16] SKF (Sweden) sold its Ovako La Foulerie (Carignan, France) hot-rolled ring plant to Fomas SpA, an Italian steel company, in January 2005.[17] SKF also closed a ball bearing plant in Thomery, France in June 2004, reportedly to improve company productivity and competitiveness. Production was shifted to other SKF facilities, principally in France.[18] INA France is reportedly investing more than €25 million in its Haguenau plants, whose production includes ball bearings. The improvements are designed to improve operations and maintain competitiveness with INA's East European and Asian facilities.[19] SNR indicated in its response to the foreign producer/exporter questionnaire that ***. It also reported that ***.[20] As indicated above, Timken France produces BBs in France; it reported that ***.[21]

Table BB-IV-4 presents reported production of BBs in France for the period of review. As shown in table BB-IV-3, data are based on responses from three firms (SKF France, SNR, and Timken France).[22] Reported capacity for BBs in France increased on an overall basis by *** percent from 2002 to 2005.[23] Production was generally stable, with a period low in 2001 when a capacity utilization ratio of *** percent was reported. Capacity utilization was between *** and *** percent throughout the rest of the period examined until 2005 when capacity fell to *** percent. Third country markets (primarily Europe) accounted for the *** of BB shipments. Reported exports of BBs to the United States of $***, in

---

[13] In January 2005, INA and FAG announced that they will formally merge in 2006 to become Schaeffler KD, a division of Schaeffler Group KG. Bruce A. Carr, "INA and FAG to Formally Merge in 2006," *The eBearing News*, Jan. 17, 2005, found at http://www.ebearing.com, retrieved May 23, 2006. The consolidation of the INA and European FAG entities was complete as of January 1, 2006. E-mail from counsel for Schaeffler, April 24, 2006.

[14] SKF recently announced that it will acquire SNFA. Bruce A. Carr, "SKF Announces Plan to Acquire SNFA," *The eBearing News*, Apr. 4, 2006, found at http://www.ebearing.com, retrieved May 23, 2006.

[15] Timken also ***.

[16] U.S. Commercial Service, Paris, e-mail to Commission staff, May 20, 2005.

[17] The Ovako facility was not considered a core asset, but has been retained as an SKF supplier of steel and rings. Bruce A. Carr, "SKF Divests Ovako Ring Mill in France."

[18] Bruce A. Carr, "SKF Closes Bearing Plant in Thomery, France," *The eBearing News*, June 9, 2004, found at http://www.ebearing.com, retrieved June 16, 2005. In its response to the foreign producer/exporter questionnaire, SKF indicated that it ***.

[19] Bruce A. Carr, "INA France in Haguenau Bearing Plant Upgrade," *The eBearing News*, Apr. 18, 2005, found at http://www.ebearing.com, retrieved June 7, 2005.

[20] SNR's foreign producer/exporter questionnaire response, section I-6. The firm anticipates that ***. (SNR also produces BBs in Brazil and Romania.) SNR reported capacity of *** bearings in 2005 and anticipates production capacity, in France, at *** bearings in 2006 and *** bearings in 2007. Ibid, sections II-2 and II-4.

[21] Timken's response to the foreign producer/exporter questionnaire, sections II-2 and II-4.

[22] Only SKF France responded to the Commission's questionnaires during the first five-year reviews.

[23] No comparison for 2000 to 2005 is possible due to the absence of capacity data for *** in 2000 and 2001.

2005, accounted for *** percent of U.S. imports, in terms of value (table BB-IV-1).[24] There were no reported tariff barriers to BB imports into France and no reported antidumping or countervailing duty orders covering imports of French BBs into third countries.

Table BB-IV-4
Ball bearings: Data for producers in France, 2000-05

* * * * * * *

The domestic parties point out that data for French capacity to produce BBs is understated since data for INA France are not included in table BB-IV-4.[25] [26]

The Industry in Germany

Major players in the German ball bearing industry consist of the international bearing manufacturers INA/FAG (Germany), NSK (Japan), SKF (Sweden), NTN (Japan), and Timken (United States). There are, in addition, about two dozen small firms that produce specialty bearings.[27] A major restructuring of the German ball bearing industry occurred with the purchase of FAG by the privately held INA-Holding Schaeffler KG in a hostile takeover that occurred in late 2001, creating the world's second largest bearings manufacturer behind SKF of Sweden. The product lines of the two firms are reportedly complementary, with INA's focus on the automotive and industrial markets and FAG's emphasis on aerospace and precision bearings.[28] The two firms operated as separate bearing companies within Schaeffler[29] until they formally merged and are now known as Schaeffler KG.[30] Prior to this acquisition, FAG had joined NTN (Japan) in 2001 in a global alliance that was reported to increase "common product range, create a well balanced regional presence, and improve profitability for both companies."[31] Further, NN, Inc. (United States), SKF (Sweden), and FAG (Germany) formed NN Euroball S.p.A. in August 2000, a joint venture that operates three chrome steel ball plants (one from each company) in Germany, Italy, and Ireland.[32] NN, Inc. later bought out FAG's share of the joint

---

[24] Share does not include exports of BBs manufactured in France to the United States by firms unrelated to the foreign manufacturers. With respect to French-produced BBs, substantial exporters included ***. ***.

[25] Domestic interested parties' prehearing brief, p. 31.

[26] A partial response for INA France (dated May 4, 2006) has been submitted to the Commission but is not included in this report due to unresolved staff questions (*referencing* telephone message to counsel for Schaeffler, dated May 11, 2006, and e-mail, dated May 22, 2006. The partial response did not ***. However, counsel for Schaeffler has indicated that ***. E-mail from counsel for Schaeffler, December 2, 2005.

[27] ***'s foreign producer/exporter questionnaire response, section III-21.

[28] Bruce A. Carr, "FAG Reaches Agreement With INA, Supports Revised Takeover Offer," *The eBearing News*, Oct. 16, 2001, found at *http://www.ebearing.com/news2001/news360.htm*, retrieved July 13, 2005.

[29] Bruce A. Carr, "INA and FAG to Formally Merge in 2006," *The eBearing News*, Jan. 17, 2005, found at http://www.ebearing.com, retrieved June 9, 2005.

[30] The consolidation of the INA and European FAG entities was complete as of January 1, 2006. E-mail from counsel for Schaeffler, April 24, 2006.

[31] Bruce A. Carr, "FAG and NTN Join to Form Global Alliance," *The eBearing News*, Mar. 1, 2001, found at *http://www.ebearing.com*, retrieved June 16, 2005.

[32] Bruce A. Carr, "SKF, FAG and NN Form Rolling Element Joint Venture," *The eBearing News*, Apr. 10, 2000, found at *http://www.ebearing.com*, retrieved June 16, 2005.

venture, and currently owns 77 percent of the joint venture. Euroball is reportedly the world's largest manufacturer of bearing balls.[33]

Changes to the production of BBs in Germany reported in response to Commission questionnaires include SKF's ceasing the production of thrust ball bearings at the end of 2003 reportedly because of ***. The production of bicycle crankshaft bearings shutdown at the end of 2005 also because of ***.[34] NSK indicated that it re-aligned its Neuweg Fertigung operation to concentrate on ***.[35] ***.

Table BB-IV-5 presents reported production of BBs in Germany for 2000-05. As shown in table BB-IV-3, data are based on responses from five firms (NSK Europe (Neuwig Fertigung), NTN Germany, Schaeffler KG, SKF Germany, and Timken Germany).[36] [37] BB capacity was relatively flat and varied by less than *** bearings throughout the 2000-05 period. Production fell on an overall basis by *** percent from 2000 to 2005 while capacity utilization declined from a high of *** percent in 2001 to *** percent in 2005. The home market and third country markets (primarily the European Union) accounted for *** shipments. Reported exports of BBs to the United States of ***, in terms of value, in 2005 accounted for only *** percent of U.S. imports (table BB-IV-1).[38] There are reportedly no tariff barriers on imports of BBs into Germany and no known antidumping or countervailing duty orders covering imports of German BBs into third countries.

Table BB-IV-5
Ball bearings: Data for producers in Germany, 2000-05

* * * * * * *

Note.–Respondent Schaeffler states that the higher unit values in BBs exported to the United States compared to home market and EU export shipments "could easily be explained by channel of distribution or product mix differences. European bearings manufacturers, for example sell a *** of their home market sales to *** than in the U.S." Schaeffler's prehearing brief, p. 46. Additionally, Schaeffler argues in its prehearing brief that its German exports do not displace U.S. sales since "Germany remains a source for specialty bearings that cannot be obtained elsewhere. {As a result}, {m}uch of the residual quantity still coming in from Europe {to the United States} consists of legacy products that cannot be readily produced in the United States or third countries." Schaeffler's prehearing brief, p. 47.

---

[33] Bruce A. Carr, "NN Acquires FAG Interest in Joint Venture NN Euroball ApS," *The eBearing News*, Feb. 4, 2003, found at http://www.ebearing.com, retrieved June 16, 2005. *See also* NN's importer questionnaire response, section II-2.

[34] SKF's response to the foreign producer/exporter questionnaire, section II-2. Production at the SKF facilities in Germany fell from *** bearings in 2000 to *** bearings in 2005 with a *** capacity shutdown from *** pieces in 2000 to *** pieces in 2005. Ibid., section II-17a.

[35] NSK's foreign producer/exporter questionnaire response, section II-17a.

[36] Data in table BB-IV-5 do not include figures for ***, whose foreign producer/exporter questionnaire response was incomplete. *** provided the following data:

* * * * * * *

[37] Five firms (FAG, NTN, SKF, Neuwig Fertigung, and Zwicker Kugellager) responded to the Commission's questionnaires during the first five-year reviews. FAG was reported to have represented *** percent of reported production in 1998. Confidential staff report INV-X-101 (May 8, 2000), p. BB-IV-9.

[38] Share does not include exports of BBs manufactured in Germany to the United States by firms unrelated to the foreign manufacturers (nor, as indicated above, data for ***). With respect to German-produced BBs, substantial exporters shown in Customs documents include ***, which did not provide a response to the Commission's questionnaire. *** is not listed as an importer of record either on Customs documents or in the questionnaire responses of the foreign producers (in 2005) and may well be exporting to the United States product recorded as home market sales in the questionnaire responses. *** is another large non-responding exporter.

The Industry in Italy

SKF (SKF Industrie S.pA), FAG, and Somecat were reported as the major producers of BBs in Italy during the first five-year reviews.[39] Three companies (FAG, SKF, and Meter) provided data on their BB operations in Italy during the first five-year reviews with SKF reporting that it accounted for approximately *** percent of BB production in Italy in 1999.[40] In its current questionnaire response, SKF estimated that, in 2005, it accounted for approximately *** percent of production. With respect to FAG, counsel for Schaeffler reported to the Commission that ***.[41] Somecat is an affiliate of SNFA and, as of May 1999, was excluded from the scope of the antidumping duty order. The last identified Italian manufacturer, Meter S.p.A., was described during the first-five year reviews to be a *** manufacturer in Italy that produced according to individual customers' specifications. It was further reported as intending to ***. At the time of the first five-year reviews it ***.[42] Meter S.p.A. did not respond to the foreign producer/exporter questionnaire in the current reviews.

In June 2000, SKF sold its Pinerolo factory that produced balls to Euroball S.p.A.[43] Further, in June 2001, SKF sold its rings production line to OMVP S.p.A. (a *** subsidiary of SKF Industrie S.p.A.). The cages production line was sold in January 2001 to KAMI S.p.A. (an unaffiliated firm). ***.[44] SKF's questionnaire response (question I-2) indicated that it covered operations by ***.

Available data on the BB industry in Italy (which is for SKF Industrie only) are presented in table BB-IV-6. As shown, SKF's production fell from *** bearings in 2000 to *** bearings in 2005, with a *** decline in shipments. Counsel for SKF indicated in its e-mail dated March 22, 2006 that the 2000 data "***" produced at ***.[45] With the divestiture, reported capacity utilization increased from *** percent in 2000 to *** percent in 2005. The firm also reported that ***.[46] Counsel for SKF indicates that AB SKF has purchased a factory in Bulgaria that ***.[47] The *** of SKF's sales are to ***. Reported exports of BBs to the United States of *** units, in terms of value, in 2005 accounted for *** percent of U.S. imports (table BB-IV-1).[48] There are no known antidumping or countervailing duty orders covering imports of Italian BBs into third countries and none of the companies reported tariffs on imports of BBs into Italy.

---

[39] Confidential staff report INV-X-101 (May 8, 2000), p. BB-IV-14, citing Stewart and Stewart submission, May 21, 1999, p. 77.

[40] Confidential staff report INV-X-101 (May 8, 2000), p. BB-IV-12.

[41] E-mail from counsel for Schaeffler, March 20, 2006. In addition, a FAG plant in Somma Vesuviana, Italy that produced BBs was sold in 2000 to the newly established VLF Somma Bearing S.p.A. company. *See* "VLF", found at http://www.vlf-bearings.com, retrieved April 5, 2006.

[42] Confidential staff report INV-X-101 (May 8, 2000), p. BB-IV-14. Customs documents show that ***, along with SKF USA, accounted for about *** percent of the value of U.S. imports of BBs from Italy during January 2000 to August 2005. *** has responded to the importers' questionnaire; however, Commission staff has contacted *** by telephone. ***. Staff telephone interview with ***, March 2, 2006. ***.

[43] *See* the discussion of the formation of Euroball earlier in this part of the report.

[44] Foreign producer/exporter questionnaire response of SKF (question II-1) and e-mail from counsel for SKF, March 22, 2006.

[45] The instructions to the foreign producer/exporter questionnaire were that respondents were to include "parts and subassemblies essentially equivalent to a complete bearing." ***.

[46] SKF's foreign producer/exporter questionnaire response, question II-2.

[47] E-mail from counsel for SKF, March 22, 2006.

[48] Although, as discussed earlier, ***.

Table BB-IV-6
Ball bearings: Data for SKF Industrie S.p.A. in Italy, 2000-05

* * * * * * *

The Industry in Japan

The Japanese market is highly competitive. There are at least 30 BB manufacturers in Japan, four of which are believed to now account for the majority of production. NSK is reportedly the largest BB manufacturer; others include JTEKT (Koyo), Nachi-Fujikoshi, and NTN.[49] Subsidiaries of each of these firms operate BB manufacturing facilities in the United States. During the first five-year reviews, 18 firms responded to Commission questionnaires.[50] As shown in table BB-IV-3, this report for the second five-year reviews includes data for 9 firms.[51] The following tabulation provides data and other statements provided by firms in response to a request in the Commission's questionnaire for information on changes in the character of firm operations or organization relating to the production of BBs since 2000.

* * * * * * *

***. Koyo, however, provided an additional statement as shown below:

"***."[52]

Table BB-IV-7 presents data on the Japanese BB industry. Capacity to produce BBs fell from 1.4 billion bearings in 2000 to 975.2 million in 2005, a period decrease of 31.5 percent. Production of BBs decreased proportionately by 33.8 percent over the period. ***. As indicated above, JTEKT *** and, also in 2001, NSK began what it calls the second phase of its business restructuring program–part of which was to ***.[53] Capacity utilization was extremely high for the Japanese industry as a whole at both the beginning and end of the period but was somewhat lower in 2001-03 as the decline in production outpaced the reported capacity utilization figures. With the reorganization of ***, JTEKT's capacity

---

[49] Characterization is not based on business proprietary questionnaire data. Minebea Co., Ltd. (i.e., "NMB") was also described during the first five-year reviews as a substantial producer of BBs in Japan. The firm, in 2000, reportedly ***. Minebea's related subsidiaries produce BBs in Thailand (NMB Thai Ltd., Pelmec Thai Ltd., NMB Hi-Tech Bearings Ltd., and NMB Precision Balls Ltd.); Singapore (NMB Singapore Ltd. and Pelmec Industries (Pte.) Ltd.); China (Minebea Electronics & Hi-tech Components (Shanghai) Ltd.); the United Kingdom (NMB-Minebea UK Ltd.); and the United States (New Hampshire Ball Bearings). Minebea's foreign producer/exporter questionnaire response, question I-5, question I-6, and question II-1.

[50] These firms were: Nakai Bearing, Inoue Jikukke Kogyo, Asahi Seiko, Nippon Thompson, Osaka Pump, Wada Seiko, Fujino Iron Works, Izumoto Seiko, Maekawa Bearing, NSK Torrington, Minebea, NPBS, Nachi-Fujikoshi, NTN, NSK, Takeshita Seiko, Higashino Sangyo, and Koyo Seiko.

[51] Each of the firms previously identified as substantial manufacturers have responded (JTEKT (Koyo), Minebea, Nachi-Fujikoshi, NSK, and NTN). Counsel for the JBIA has indicated to the Commission that Inoue Jikukke Kogyo, Izumoto Seiko, Maekawa Bearing, and Wada Seiko have informed the JBIA that they will not be responding. E-mail from counsel for the JBIA, March 17, 2006.

[52] JTKET's foreign producer/exporter questionnaire response, section II-2.

[53] NSK's foreign producer/exporter questionnaire response, section III-6.

Table BB-IV-7
Ball bearings: Data for producers in Japan,[1] 2000-05

Item	2000	2001	2002	2003	2004	2005
			Quantity *(1,000 bearings)*			
Capacity	1,424,047	1,299,501	1,169,805	1,082,703	995,535	975,218
Production	1,457,918	1,125,433	1,038,927	1,002,752	991,100	965,554
End-of-period inventories	99,850	91,603	71,713	70,277	71,159	75,297
Shipments:						
Internal consumption/transfers	21,170	11,567	11,019	11,241	11,295	9,515
Home market	974,378	800,539	758,550	760,755	764,812	762,073
Exports to:						
United States	43,629	34,041	31,377	29,360	30,928	31,981
European Union	67,734	47,249	44,744	42,806	42,846	45,541
Asia	483,956	372,211	360,210	304,311	264,475	228,405
All other markets	65,468	54,206	46,753	49,611	45,046	48,476
Total exports	660,786	507,707	483,083	426,088	383,295	354,403
Total shipments	1,656,335	1,319,813	1,252,652	1,198,085	1,159,401	1,125,991
			Ratios and shares (*percent*)			
Capacity utilization	102.4	86.6	88.8	92.6	99.6	99.0
Inventories/production	6.8	8.1	6.9	7.0	7.2	7.8
Inventories/shipments	6.0	6.9	5.7	5.9	6.1	6.7
Share of total shipments:						
Internal consumption/transfers	1.3	0.9	0.9	0.9	1.0	0.8
Home market	58.8	60.7	60.6	63.5	66.0	67.7
Exports to:						
United States	2.6	2.6	2.5	2.5	2.7	2.8
European Union	4.1	3.6	3.6	3.6	3.7	4.0
Asia	29.2	28.2	28.8	25.4	22.8	20.3
All other markets	4.0	4.1	3.7	4.1	3.9	4.3
Total exports	39.9	38.5	38.6	35.6	33.1	31.5

Table continued on next page.

Table BB-IV-7--*Continued*
Ball bearings: Data for producers in Japan,[1] 2000-05

Item	2000	2001	2002	2003	2004	2005
			Value *($1,000)*			
Shipments:						
Home market	1,956,045	1,542,982	1,476,791	1,670,973	1,933,035	1,985,473
Exports to:						
United States	137,436	113,049	96,778	106,599	117,212	129,328
European Union	127,809	95,860	89,491	107,891	119,465	130,185
Asia	488,725	372,160	374,800	413,398	440,797	414,885
All other markets	131,815	109,771	97,861	109,943	109,892	120,518
Total exports	885,785	690,840	658,930	737,831	787,366	794,916
Total shipments	2,841,830	2,233,822	2,135,721	2,408,804	2,720,401	2,780,389
			Unit value *(per bearing)*			
Shipments:						
Home market	$2.01	$1.93	$1.95	$2.20	$2.53	$2.61
Exports to:						
United States	3.15	3.32	3.08	3.63	3.79	4.04
European Union	1.89	2.03	2.00	2.52	2.79	2.86
Asia	1.01	1.00	1.04	1.36	1.67	1.82
All other markets	2.01	2.03	2.09	2.22	2.44	2.49
Total exports	1.34	1.36	1.36	1.73	2.05	2.24
Total shipments	1.74	1.71	1.72	2.03	2.37	2.49

[1] These data are for complete bearings or bearing equivalents and exclude parts.

Note.–***.

Source: Compiled from data submitted in response to Commission questionnaires.

utilization fell from *** percent in 2000 to *** percent in 2001 and then rose steadily to *** percent[54] in 2005. NSK's capacity utilization fell from *** percent in 2000 to *** percent in 2001 and then declined further to *** percent in 2002 before rising steadily to *** percent in 2005.[55] The Japanese market accounted for the majority of total shipments throughout the period examined. Reported exports of BBs to the United States of $129.3 million, in terms of value, in 2005 accounted for 51.0 percent of U.S.

[54] ***.

[55] JTEKT (Koyo) and NSK's responses to the foreign producer/exporter questionnaire, section II-17a.

imports (table BB-IV-1).[56] There are no known antidumping or countervailing duty orders covering imports of Japanese BBs into third countries.

The domestic interested parties compare published JBIA data to that compiled from Commission questionnaires and state that questionnaire data are understated.[57] Approximately 25 firms in Japan that were sent the Commission's foreign producer/exporter questionnaire did not respond.[58] Additional producers of BBs in Japan that did not receive questionnaires consist of: ***.[59] The following tabulation presents published JBIA data on Japanese production and sales of ball bearings for 2000-05:

Item	2000	2001	2002	2003	2004	2005
	Quantity (in 1,000 units)					
Production	2,138,081	1,720,253	1,616,788	1,518,806	1,587,754	1,579,606
Sales	2,271,823	1,854,659	1,750,321	1,747,717	1,783,914	1,729,991
	Value ($1,000)					
Production	3,268,498	2,531,918	2,407,489	2,651,453	3,059,969	3,166,195
Sales	3,369,741	2,644,006	2,510,655	2,815,466	3,205,583	3,301,152
Source: Japan Bearing Industry Association (JBIA).						

A comparison of that tabulation to the questionnaire data in table BB-IV-7 shows the questionnaire data for value submitted to the Commission to be less understated than the corresponding questionnaire data for quantity. The value of total shipments of BBs produced in Japan in 2005 was $2.8 billion (table BB-IV-7) while the value of total sales reported by the JBIA was $3.3 billion.

The Industry in Singapore

One consolidated questionnaire response that accounts for all BB production in Singapore was received from NMB/Pelmec (affiliated producers of BBs) or "NMB Singapore."[60] Both companies are subsidiaries of the Minebea Group, headquartered in Japan. ***.[61] The Singapore industry is described as focusing on bearing assembly rather than manufacture.[62] NMB/Pelmec produces miniature ball

[56] Numerous firms are listed in Customs documents as having exported Japanese-manufactured BBs to the United States.

[57] Domestic interested parties' prehearing brief, app. B-5, pp. 3-5.

[58] However, a number of firms may only have exported and not actually produced BBs in Japan.

[59] JTEKT's foreign producer/exporter questionnaire response and domestic interested parties' prehearing brief, app. B-5 (p. 3).

[60] NMB/Pelmec states that it accounted for all subject BB production in Singapore. NMB's prehearing brief, p. 2.

[61] NMB/Pelmec's foreign producer/exporter questionnaire response, question I-3, and NMB's prehearing brief, p. 2.

[62] U.S. Commercial Service, Singapore, e-mail to Commission staff, May 31, 2005. Assemblers include Meritor Heavy Vehicle Systems and Timken Super Precision Singapore (notes to table BB-IV-3).

bearings.[63] The firm asserts that "no meaningful amount of subject precision BBs have been imported from Singapore" since almost all imports have been non-precision BBs from 9-30mm in diameter.[64]

Reported production of BBs in Singapore decreased from 2000 to 2001 by *** percent and then increased steadily from 2001 to 2005 by *** percent for a net rise of *** percent (table BB-IV-8). Capacity also rose on an overall basis by *** percent and capacity utilization was *** percent for each year except for 2001 and 2002.[65] Third country markets accounted for *** of shipments; there was an overall decline in the volume of home market shipments from 2000 to 2005 and, also, a steady decline in exports to the United States. As discussed earlier in this part of the report, *** attributes the fall in BBs from Singapore to a number of factors "***."[66] Reported exports of BBs to the United States of $***, in terms of value, in 2005 accounted for *** percent of subject U.S. imports of BBs from Singapore (table BB-IV-1).[67] ***.[68]

Table BB-IV-8
Ball bearings: Data for NMB/Pelmec in Singapore, 2000-05

* * * * * * *

NMB/Pelmec reported that *** and ***.[69] There are no known antidumping or countervailing duty orders covering imports of Singaporean BBs into third countries.

The Industry in the United Kingdom

The BB industry in the United Kingdom has, like in other producing countries, undergone substantial reorganization and other changes since the first five-year review of the antidumping duty order. Six U.K. companies reported data on their production of BBs during the first reviews: AHR International, Barden, NSK-RHP Europe, RHP Aerospace, Timken Aerospace, and Torrington.[70] NSK-

---

[63] NMB/Pelmec's foreign producer/exporter questionnaire response, question II-5. As shown in table BB-IV-1, the unit value of U.S. imports of subject product from Singapore was substantially less than the unit values of product imported from the other subject countries.

[64] NMB/Pelmec's posthearing brief, p. 7. The term "non-precision" or "un-precision" however, is not necessarily synonymous with "unground bearings" (which are not subject to the BBs antidumping orders). The non-precision BBs produced in Singapore and exported to the United States *** and are subject to the antidumping duty under review. E-mail from counsel for NMB/Pelmec, April 24, 2006, and staff telephone interview with counsel, May 23, 2006.

[65] NMB/Pelmec's questionnaire response did not provide an explanation of its capacity changes. NMB/Pelmec asserted in its prehearing brief that capacity levels fluctuate according to manufactured product mix, which do not reflect physical expansions. Additionally, NMB/Pelmec operated at high utilization rates by using overtime shifts despite the significant decline in exports to the United States. Furthermore, NMB/Pelmec "expect{s} that they will continue operating at high capacity utilization rates leaving no available excess capacity from which to increase imports to the United States. NMB/Pelmec's prehearing brief, pp. 25-26.

[66] *** importer questionnaire response, section II-11.

[67] ***. NMB confirms that NMB/Pelmac is the only exporter of subject Singapore BB production to the United States. NMB's prehearing brief, p. 5. ***. ***.

[68] Domestic interested parties' prehearing brief, p. 14, n. 42.

[69] NMB/Pelmec's foreign producer/exporter questionnaire response, sections II-1, II-2, and II-4.

[70] SNFA UK did not respond but, as of May 2000, was excluded from the antidumping duty order.

RHP Europe was reported during the first five-year reviews to have accounted for *** production of BBs in the United Kingdom.[71] Current *** U.K. producers include its successor firm, NSK Europe, along with NMB Minebea UK (table BB-IV-3). Responding firms to questionnaires issued in the current five-year review consisted of: Barden UK, NMB-Minebea UK, NSK Europe (including NSK Bearings Europe), SKF UK/SKF Aeroengine UK, and Timken UK (including Timken Aerospace UK). Koyo Bearings (Europe) Ltd. ("Koyo Bearings") provided a partial response. Information on the organizational structure of the industry provided by firms in their questionnaire responses is presented in the following tabulation along with any anticipated changes (including plans to add or shut down production capacity).

* * * * * * *

NSK is reported in the trade press to have announced, in May 2005, the further restructuring at its Peterlee facility, which was described as producing ball bearings in addition to wheel hub units and other products. The restructuring reportedly includes job cuts representing 10 percent of the plant's workforce and capital investments of £16 million to improve its position "in an increasingly competitive market." NSK is cited as stating that its "margins are continually squeezed by increasing costs, many of which cannot be passed on to customers."[72]

Table BB-IV-9 presents data on BB production in the United Kingdom. Production and capacity to produce BBs rose from 2000 to 2001 and then fell *** from 2001 to 2005 for net period decreases of *** percent and *** percent, respectively. Capacity utilization increased from about *** to *** percent in the early part of the period reviewed to *** to *** percent in the latter part. The drop-off in capacity and production is ***. The firm indicates that it "***." Also, ***.[73] NSK's production drop-off did not substantially impact the volume of exports of BBs to the United States (which were a *** share of total UK shipments to begin with) but did result in a shift in the shares to all other markets. Before 2002, UK-produced product, by quantity, was shipped ***. By 2005, UK-produced product was ***. Reported exports of BBs to the United States of $***, in 2005, accounted for *** percent of U.S. imports, in terms of value (table BB-IV-1).

Table BB-IV-9
Ball bearings: Data for producers in the United Kingdom, 2000-05

* * * * * * *

Available data on *** for BBs in the United Kingdom (provided in its response to the foreign producer/exporter questionnaire) are shown below:

* * * * * * *

There are no known antidumping or countervailing duty orders covering imports of UK-produced BBs into third countries.

---

[71] Confidential staff report INV-X-101 (May 8, 2000), pp. BB-IV-23.

[72] Julia Breen, "Staying 'lean' forces job cuts," *The Northern Echo*, May 13, 2005, at *http://itc.newsedge-web.com*, retrieved May 18, 2005, and Bruce A. Carr, "NSK Peterlee Hit Again by Simultaneous Layoffs and Investment," *The eBearing News*, May 17, 2005, found at http://www.ebearing.com, retrieved June 7, 2005.

[73] NSK's foreign producer/exporter questionnaire response, section II-17a. *Also see* the previous tabulation where the firm describes closing "multiple manufacturing facilities."

THE GLOBAL BB MARKET

The restructuring of the U.S. industry producing BBs and the reorganization and rationalization of the operations of subject products are reported by questionnaire respondents to be, at least in part, a function of the increasing globalization of the industry. In its questionnaire response, ***, which opposes the continuation of the antidumping duty orders, argues the global restructuring has been driven by "three major phenomena," namely:

> "(1) Those customers located in the subject countries that demand standard BBs and certain custom BBs for less technical applications have shifted significant portions of their manufacturing capabilities to lower-cost, non-subject countries;
>
> (2) China's industrial base (and, to a lesser extent, the industrial base of other non-subject countries) has grown considerably; and
>
> (3) The production capacity and capabilities of BB producers located in the non-subject countries has grown in tandem with the first two phenomena, and thus intensified global BB competition, because the costs to produce standard BBs and less-technical custom BBs is much lower in the non-subject countries than it is in the subject countries (and the United States)."[74]

Furthermore, Schaeffler in its prehearing brief, identifies the consolidation within the global BB industry to be driven by "the need for economies of scale."[75]

Global demand for all bearings is forecasted to grow by 5.7 percent annually through 2007 to $36 billion, spurred by rising output of bearing-consuming products, especially in developing regions. North America and Western Europe, however, will remain the world's leading markets for these products. BBs are estimated to have accounted for over 45 percent of worldwide bearing sales of $27 billion in 2002. The United States and Japan are the world's largest producing countries, with over $10 billion in bearing shipments.[76] SKF (Sweden) is the world's largest producer of bearings, followed by Schaeffler (the INA/FAG operations) (Germany) and Timken (United States), as shown in the following tabulation:

---

[74] ***'s producer questionnaire response, section I-3.

[75] Schaeffler's prehearing brief, p. 24.

[76] World Bearings, study brochure, Freedonia Group, June 2003, found at *http://www.freedoniagroup.com*, retrieved March 13, 2006. Other estimates put the global market at $21.0 billion in 2002, with 50 percent accounted for by ball bearings and 18 percent by tapered roller bearings. Business Plan, ISO/TC 4 (Rolling bearings), September 9, 2004, provided in SKF's posthearing brief, exh. 5, pp. 1, 4.

World's leading roller bearing producers (parent location) (2002)	Sales (in billion *dollars)*
SKF (Sweden)	4.0
INA/FAG (Germany)	3.2
Timken/Torrington (USA)	2.9
NSK (Japan)	2.7
NTN (Japan)	1.8
Koyo (Japan)	1.7
NMB (USA)	0.82
SNR (France)	0.45
Nachi (Japan)	0.38

According to parties in support of revocation, there are no major barriers to the importation of certain BBs into countries other than the United States.[77]

The global market for BBs likely exceeds $8.3 billion, as indicated by reported trade of BBs during 2000-04.[78] The United States, the world's second largest import market during 2000-04, accounted for 9 percent ($781 million) of this total (table BB-IV-10). Germany was the leading import market during the period of review, with a 15-percent share ($1.3 billion) of world imports in 2004. China emerged as the third largest import market in 2003, exhibiting 32-percent annual import growth during 2000-04. Many of the same import markets are leading BB export sources as well. Japan, Germany, and China accounted for 38 percent ($3.1 billion) of reported BB exports in 2004 (table BB-IV-11). The United States accounted for another 5 percent ($429 million) of such exports. BB exports from each subject country exhibited growth over the period, with the United States emerging as one of the top ten export destinations for all subject countries except Singapore (tables BB-IV-12 through BB-IV-17).[79]

[77] SKF's response to the notice of institution, p. 8, and NSK's response to the notice of institution, p. 4.

[78] Reporting countries collect import/export data for ball bearings using different quantity measures (tons vs. units), precluding the development of comparable quantity and unit value data.

[79] Export data are presented for different reporting periods for the subject countries, reflecting the latest official statistics provided.

Table BB-IV-10
Certain ball bearings: Global imports, by reporting country, 2000-04

Reporting country	2000	2001	2002	2003	2004
	Value ($1,000)				
Germany	860,389	827,729	817,041	1,054,549	1,254,266
USA	860,149	745,459	698,525	690,847	781,278
China	201,490	240,157	340,348	468,367	620,221
Italy	412,133	369,391	382,050	439,679	492,274
France	278,253	263,782	287,176	350,887	425,311
Singapore	349,429	290,493	291,172	321,503	385,770
Hong Kong	184,397	227,645	230,412	295,576	303,949
Japan	314,634	268,277	232,742	242,961	297,057
Netherlands	143,328	163,328	192,247	252,517	293,450
Belgium	253,801	224,811	198,950	230,635	268,462
All other	2,536,412	2,389,257	2,420,220	2,779,688	3,204,255
Reporting total	6,394,415	6,010,329	6,090,883	7,127,209	8,326,293

Note.–These data represent imports for HTS heading 8482.10 (ball bearings), which are not directly comparable to the BB imports subject to the scope of this review.

Source: Data from Eurostat, U.S. Bureau of the Census, China Customs, Singapore Customs, Hong Kong Census & Statistics Department, Japan Customs, and the United Nations, as presented by Global Trade Atlas.

Table BB-IV-11
Certain ball bearings: Global exports, by reporting country, 2000-04

Reporting country	2000	2001	2002	2003	2004
	Value ($1,000)				
Japan	1,380,559	1,092,337	1,028,140	1,164,681	1,340,318
Germany	610,207	688,098	690,142	830,322	1,018,984
China	504,844	508,353	545,361	575,166	731,466
Italy	446,169	439,649	448,746	571,904	703,501
France	528,634	469,532	511,275	594,450	692,993
Singapore	525,385	446,485	449,873	441,955	510,394
USA	324,393	348,730	352,977	373,567	429,120
Netherlands	105,187	96,441	149,958	249,882	292,405
Belgium	235,307	205,121	199,356	225,863	257,786
United Kingdom	226,964	185,182	167,529	189,750	223,370
All other	1,428,353	1,427,054	1,465,620	1,645,614	1,900,212
Reporting total	6,316,002	5,906,982	6,008,977	6,863,154	8,100,549

Note.–These data represent exports for HTS heading 8482.10 (ball bearings), which are not directly comparable to the BB exports subject to the scope of this review.

Source: Data from Eurostat, U.S. Bureau of the Census, China Customs, Singapore Customs, Japan Customs, and the United Nations, as presented by Global Trade Atlas.

Table BB-IV-12
Certain ball bearings: French exports, by country, 2000-05

Partner country	2000	2001	2002	2003	2004	2005
	Value ($1,000)					
Germany	92,259	92,549	109,113	135,819	156,136	173,425
Italy	83,006	76,189	76,019	86,683	96,193	89,204
Belgium	79,019	60,795	61,613	71,684	84,663	87,749
Spain	44,015	44,714	48,638	57,687	59,650	53,679
United Kingdom	35,667	32,244	35,877	41,671	46,941	44,280
Singapore	25,612	22,807	28,017	32,889	43,014	48,824
United States	41,794	28,514	22,693	20,248	23,717	25,056
Sweden	16,130	12,493	13,743	16,996	18,357	17,665
Romania	285	671	1,654	2,111	6,755	14,221
Turkey	7,858	4,186	5,261	8,184	9,996	11,093
All other	102,989	94,370	108,647	120,478	147,571	165,856
World	528,634	469,532	511,275	594,450	692,993	731,052

Note.–These data represent exports for HTS heading 8482.10 (ball bearings), which are not directly comparable to the BB exports subject to the scope of this review.

Source: Data from Eurostat, as presented by Global Trade Atlas.

Table BB-IV-13
Certain ball bearings: German exports, by country, 2000-05

Partner country	2000	2001	2002	2003	2004	2005
	Value ($1,000)					
France	69,070	77,189	78,560	94,733	101,677	114,003
Italy	67,273	73,328	76,673	83,359	97,669	102,971
United States	39,550	40,833	41,295	50,235	70,793	76,978
United Kingdom	46,654	49,558	43,097	55,009	57,077	56,744
Belgium	47,053	56,266	39,757	44,085	49,620	54,315
Spain	37,831	34,460	33,617	43,788	51,222	50,705
Austria	28,019	29,694	30,272	39,976	49,793	49,210
Denmark	17,227	26,935	36,298	34,830	43,422	46,987
Singapore	18,100	18,604	25,412	29,615	41,023	46,462
Netherlands	30,197	37,802	30,496	35,381	37,899	41,065
All other	209,233	243,429	254,665	319,311	418,789	458,287
World	610,207	688,098	690,142	830,322	1,018,984	1,097,727

Note.–These data represent exports for HTS heading 8482.10 (ball bearings), which are not directly comparable to the BB exports subject to the scope of this review.

Source: Data from Eurostat, as presented by Global Trade Atlas.

Table BB-IV-14
Certain ball bearings: Italian exports, by country, 2000-04

Partner country	2000	2001	2002	2003	2004
	Value ($1,000)				
Germany	162,843	151,739	168,742	221,123	268,573
France	45,446	42,480	39,014	52,147	73,935
Belgium	52,271	55,592	56,081	63,815	68,677
Sweden	22,121	18,642	19,027	30,691	37,498
United Kingdom	21,777	17,336	14,350	19,131	36,226
United States	13,462	17,736	27,179	34,611	34,291
Spain	25,151	18,388	15,568	20,873	25,238
Singapore	11,270	12,379	12,246	14,031	17,125
Brazil	5,479	4,207	6,161	10,127	14,572
Netherlands	6,238	6,080	9,944	7,025	13,435
All other	80,111	95,070	80,434	98,330	113,931
World	446,169	439,649	448,746	571,904	703,501

Note.–These data represent exports for HTS heading 8482.10 (ball bearings), which are not directly comparable to the BB exports subject to the scope of this review.

Source: Data from Eurostat, as presented by Global Trade Atlas.

Table BB-IV-15
Certain ball bearings: Japanese exports, by country, 2000-05

Partner country	2000	2001	2002	2003	2004	2005
	Value ($1,000)					
United States	269,188	211,112	180,173	180,875	214,667	243,081
Singapore	190,885	116,161	109,443	101,812	122,915	113,361
China	78,577	74,804	92,178	140,460	160,246	165,529
Hong Kong	117,951	99,709	89,884	93,323	100,873	96,482
Thailand	97,834	76,245	77,929	87,163	83,118	81,629
Taiwan	83,001	54,409	62,340	74,695	96,062	81,668
Korea South	86,407	61,487	61,769	73,325	85,311	92,268
Germany	78,162	73,174	60,801	82,838	92,847	99,830
Netherlands	39,242	40,056	34,213	47,446	62,637	75,292
United Arab Emirates	28,329	25,832	22,263	27,375	23,422	23,116
All other	310,983	259,348	237,147	255,369	298,220	301,149
World	1,380,559	1,092,337	1,028,140	1,164,681	1,340,318	1,373,405

Note.–These data represent exports for HTS heading 8482.10 (ball bearings), which are not directly comparable to the BB exports subject to the scope of this investigation.

Source: Data from Japan Customs, as presented by Global Trade Atlas.

Table BB-IV-16
Certain ball bearings: Singapore exports, by country, 2000-05

Partner country	2000	2001	2002	2003	2004	2005
	Value ($1,000)					
Hong Kong	53,203	49,742	67,626	75,140	85,433	152,909
Indonesia	0	0	0	0	0	61,162
Thailand	106,372	69,658	57,927	57,712	51,162	53,336
Japan	55,205	44,748	38,571	45,072	54,483	52,005
India	19,947	20,014	21,525	33,483	50,200	47,714
Malaysia	53,652	46,948	43,188	34,999	40,653	43,328
China	9,963	11,824	18,708	21,282	33,832	39,037
Taiwan	24,907	29,664	30,402	22,171	22,277	36,672
Philippines	43,081	34,279	29,954	27,537	29,945	28,239
Korea South	14,782	10,604	12,971	16,775	16,783	24,816
United States	52,548	46,805	34,607	24,345	23,087	20,661
All other	91,725	82,199	94,394	83,439	102,539	119,780
World	525,385	446,485	449,873	441,955	510,394	679,659

Note.–These data represent exports for HTS heading 8482.10 (ball bearings), which are not directly comparable to the BB exports subject to the scope of this review.

Source: Data from Singapore Customs, as presented by Global Trade Atlas.

Table BB-IV-17
Certain ball bearings: United Kingdom exports, by country, 2000-05

Partner Country	2000	2001	2002	2003	2004	2005
	Value ($1,000)					
Germany	54,565	54,429	47,848	50,995	66,453	71,927
Netherlands	24,555	27,854	23,205	33,609	28,047	28,304
Japan	6,985	5,867	5,110	7,749	14,133	16,836
United States	17,803	7,940	8,866	11,582	13,571	14,785
Italy	38,473	25,669	24,497	18,146	15,746	14,170
France	22,432	12,088	8,727	9,061	11,017	12,186
Czech Republic	58	27	111	657	1,659	8,496
Turkey	4,672	2,773	2,214	4,142	3,740	7,264
United Arab Emirates	543	745	1,762	2,864	3,657	7,106
Singapore	2,658	2,777	3,573	4,749	5,501	6,828
All other	54,220	45,013	41,616	46,196	59,846	61,854
World	226,964	185,182	167,529	189,750	223,370	249,756

Note.–These data represent exports for HTS heading 8482.10 (ball bearings), which are not directly comparable to the BB exports subject to the scope of this review.

Source: Data from Eurostat, as presented by Global Trade Atlas.

PART V: PRICING AND RELATED INFORMATION

FACTORS AFFECTING PRICES

Raw Material Costs

The principal raw material in BBs is bearing quality steel bar. Using merchant steel bar as a proxy for bearing quality steel,[1] the price of merchant steel bar rose from $342 per ton in January 2000 to $617 per ton in December 2005. As recently as September 2003, the price for merchant steel bar was still $342 per ton, with the increase having come since then.

Producers and importers were asked to what extent changes in the prices of raw material costs had affected the prices for their sales of BBs. Seventeen producers and 32 importers described increased raw material prices, while one producer and six importers reported no changes in raw material costs.[2] Most suppliers who reported an increase in raw material costs indicated that the increase had come since 2002 or 2003, with raw material costs having been stable before then. These increased costs (steel, and to a lesser extent energy) were also described as being a worldwide phenomenon, with similar worldwide effects. Several suppliers commented that raw material costs had stabilized in the last year, and that they expected such costs to remain stable in the future.[3]

Moreover, those producers and importers who did report increased raw material prices reported a variety of effects. Some reported that they could pass these costs through to customers (either in the form of surcharges or raised prices), while others stated that they could not, especially with larger OEM customers. For example, *** indicated that it had assessed a surcharge to cover raw material costs. That surcharge had been mostly accepted by its industrial consumers, but some automotive purchasers had threatened to move production offshore if forced to purchase at higher prices. It added that it was currently trying to convert its surcharges to higher list prices.

More information on the effects of raw material costs on the U.S. industry is available in part III of this chapter.

Transportation Costs to the U.S. Market

Transportation costs for BBs from the subject countries to the United States (excluding U.S. inland costs) are estimated to be 2.0 percent of the total cost for BBs from France, 4.6 percent from Germany, 6.0 percent from Italy, 6.2 percent from Japan, 1.9 percent from Singapore, and 2.2 percent from the United Kingdom.[4]

---

[1] Pricing data for bearing quality steel bar are not available. Merchant steel bar is manufactured on equipment similar to that used to produce bearing quality steel bar, albeit with different chemistry. Data are from CRU.

[2] One of these importers, ***, said that BBs sold at lower prices in 2005 than in 2000.

[3] Rising raw material costs since January 1, 2000 affected 15 foreign producers/exporters, with 10 noticing the rise in 2004 and 2005. Ten identified rising steel prices as the cause. *** of Germany stated steel prices have increased 50 percent since 2002.

[4] These estimates are derived from official Commerce statistics and represent the transportation and other charges on imports valued on a c.i.f. basis, as compared with customs value, for the period January 2005-December 2005.

U.S. Inland Transportation Costs

Producers and importers[5] generally estimated that transportation costs were one to five percent of the total delivered cost of their BBs. (However, importers had more estimates of 5 percent than producers.) Ten producers and 32 importers said that their firm arranges transportation, while five producers and 12 importers said that their purchasers do.[6] Both producers and importers generally shipped a majority of their shipments at least 100 miles within the United States.

U.S. Price Levels

According to data from the BLS, the producer price index for intermediate goods rose 26.1 percent from January-March 2000 to October-December 2005 while the producer price index for iron and steel products rose 44.9 percent over the same period.[7]

Exchange Rates

Indices of the nominal and real exchange rates of currency from France, Germany, Italy, Japan, Singapore, and the U.K. are presented in appendix F. The Euro, the common currency of France, Germany, and Italy, dipped shortly after 2000 but recovered in 2003 and has appreciated since then. The nominal value of the Japanese yen declined substantially from 2001 to 2002, recovered somewhat in 2004, and then dipped again in 2005. Elsewhere, the Singaporean dollar held steady throughout 2000-2005, and the British pound appreciated until 2002, after which its value has fallen.

PRICING PRACTICES

Pricing Methods

BB suppliers use price lists, transaction-by-transaction negotiations, and long-term contracts when negotiating the price for BBs. Many suppliers reported that prices for OEMs are negotiated individually while distributors purchase off price lists.[8] Price lists may also be used as a starting point for negotiations. For larger customers, suppliers reported using long-term contracts for the particular

---

[5] The following firms submitted both an importer's and a producer's questionnaire: ***. For the purposes of this section (except as regards presentation of pricing data), the responses of these firms have been counted both as a producer and as an importer. (However, as *** also submitted an importer's questionnaire and is related to importer ***, its answers have not been counted in this chapter.) In almost all cases, the answers to the producer's and importer's questionnaires were substantially similar or identical as the firm referred to the other questionnaire.

[6] In addition, *** reported that it arranges transportation for its distributors while its OEM purchasers arrange transportation for themselves. *** reported that both it and its purchasers may arrange transportation.

[7] The producer price indexes for each quarter was constructed by taking an average of the seasonally adjusted price index for each month of the quarter.

[8] Many examples of price lists were provided to the Commission as part of producer and importer questionnaire responses. Most were quite extensive with a long list of a variety of bearings products.

programs for which the purchaser is purchasing BBs.[9] For larger OEMs, prices will usually be negotiated lower than those for distributors.[10]

Suppliers described a wide variety of sales terms for their sales of BBs. Five producers and six importers reported that over 50 percent of their BB sales were under long-term (more than one year) contracts,[11] four producers and 12 importers reported that over 50 percent of their BB sales were under short-term (one year or less) contracts,[12] four producers and 24 importers reported over 50 percent of their BB sales were spot sales, and one producer (***) reported that its sales were more equally divided between long-term contracts, short-term contracts, and spot sales.[13]

When asked how frequently they purchase certain bearings, 17 BB purchasers answered daily, 16 answered weekly, 12 answered monthly, four answered quarterly or bimonthly, and one answered annually. Forty-seven BB purchasers did not expect this pattern to change in the next two years, but four did, with three stating that they were no longer purchasing bearings or were decreasing their purchases significantly.

BB purchasers typically contact between one and five suppliers before purchasing. When asked if purchases typically involve negotiations (and if so, if these negotiations involve quoting competing prices), 42 BB purchasers responded that their purchases did typically involve negotiations, while nine said that they did not. However, few if any purchasers reported discussing competitors' prices. Negotiations typically involved price, design, quantity ordered, long-term agreements, and/or materials availability, among other factors.

Forty BB purchasers reported that they did not vary their purchases of BBs from a particular supplier based on the price offered by that supplier, but 11 did. However, one of those who did, ***, explained that it would prefer a long-term (approximately three year) supply agreement with a close working relationship.

When asked if they had changed suppliers in the last five years, 36 BB purchasers answered no while 15 answered yes. Those who had changed suppliers cited availability (supplier capacity) and price, but several, including ***, stated that changing suppliers is an infrequent occurrence for them because of qualification issues. *** explained that it had become an authorized distributor for ***.

Purchasers were asked if they were aware of any new suppliers in the market in the last five years. Forty BB purchasers said no, but 11 said yes, citing various suppliers from North America, Europe, China (especially Peer), and Japan. When asked if they anticipated any new suppliers in the future, 34 BB purchasers said no and 15 said yes, often citing Chinese, Indian, and potentially Vietnamese as well as German suppliers.

---

[9] Few suppliers reported regularly using discounts, although quantity, early payment, and distributor loyalty discounts were noted. For longer term contracts, discounts are more likely built in to the negotiated price. *** remarked that customers may seek discounts even after sales have been negotiated under contract.

[10] Hearing transcript, pp. 120 (Swinehart) and 123-124 (Griffith).

[11] Long-term contracts were generally 1-5 years, often did not allow price renegotiation, did not always fix quantity, and typically did not have a meet-or-release provision. However, *** reported that customers may be released or try to renegotiate price.

[12] Short-term contracts were generally 6-12 months, generally did not allow price renegotiation, fixed either price or both price and quantity, and usually did not have a meet-or-release provision.

[13] In 2005, BB foreign producer/exporters favored spot sales, with 12 firms making all sales spot. Seven foreign producers/exporters used short-term contracts, and seven used long-term contracts. Five firms reported 50 percent or greater of sales by long-term contract; four reported greater than 50 percent of sales by short-term contract. Long-term contracts ranged between two and five years. Four firms fixed price, one fixed price and quantity, and one fixed neither. Only one firm included a meet-or-release provision in their contracts; six did not. The duration of short-term contracts was one year or less. Three firms had contracts fixing price only and two had contracts fixing both price and quantity. Four firms included a meet-or-release provision; one did not.

Purchasers were asked to identify price leaders and describe how these leaders led prices. Seventeen BB purchasers named Timken as a price leader, ten named SKF, seven named NTN, seven named New Hampshire Ball Bearing, and five named NSK, with INA and Koyo also receiving multiple mentions. Purchasers reported that leaders led by providing a quality product and having a large market share. According to some purchasers, these qualities have allowed the price leaders to increase prices annually.[14] However, *** described pricing in the BB market as being driven more by customers than suppliers.

Producers and importers were also asked if any individual firms had influenced the price of BBs in the U.S. market. Ten producers and 16 importers said yes, generally citing Chinese imports (sometimes through the importing company, such as Peer) and the large multinational bearings producers, with importers being more likely than producers to cite Timken. *** cited Bearings Limited and other alleged "gray market" suppliers that it said import brand name bearings at low cost. However, six producers and 25 importers answered that no firm had influenced price.[15]

When asked how frequently the price of certain bearings changes, 29 BB purchasers responded with answers between six months and one year. Other purchasers reported longer periods when under contracts. Some purchasers reported that price changes depend on energy and raw material costs, with *** reporting that such surcharges can change monthly. *** reported that price changes are coming more frequently now than in 2003 and before. *** similarly reported that prices were typically held for the life of a program, but have changed significantly in recent years due to higher steel pricing. However, *** explained that it encouraged annual cost reductions, and that its worst case is that certain bearings costs remain constant for the life of a program. *** also said that it does not accept price increases.

Price Trends

Purchasers were asked if there had been a change in the price of BBs since January 1, 2000, and if so, how the price of U.S.-produced BBs has changed relative to imported BBs. In addition, they were asked to report whether the prices of U.S. BBs were now relatively higher or lower or the same as the prices of imported BBs. Five BB purchasers reported that there had been no change in prices, while 14 others reported that prices of U.S. and imported BBs had changed by the same amount, with one of these purchasers citing "steel economics." The responses of those who saw changes in relative prices are summarized in the following tabulation:

[14] *** reported that *** threatened to stop shipping product in order to obtain price increases. When those firms succeeded in obtaining price increases, their competitors followed with price increases.

[15] When asked to name individual agents who have influenced the U.S. market price of BBs, 14 foreign producers/exporters observed that Chinese imports had decreased prices in the U.S. market since 2000.

Country	Number of purchasers reporting a change in price	Number of purchasers reporting how U.S. prices are relative to imported
France	3	5 higher 1 same
Germany	5	7 higher 1 same 1 lower
Italy	4	5 higher 1 same
Japan	11	11 higher 4 lower
Singapore	3	8 higher
U.K.	3	6 higher 1 same
China (nonsubject source)	8	12 higher 1 lower
Other nonsubject countries	7	10 higher

Producers and importers were asked to compare the prices of BBs in the U.S. and non-U.S. markets. While most answered that such comparisons were difficult, some that could compare generally described U.S. prices as higher, although importers *** described at least their international prices as the same as U.S. prices. *** described the subject BBs it imports from Germany as not available in the United States. However, *** both presented data showing that U.S. prices were higher than foreign prices.[16] *** provided an analysis that estimated that U.S. prices may be 15-50 percent (or more) higher than non-U.S. prices.[17] *** provided an analysis of pricing of mounted BBs that showed even greater discrepancies between U.S. and non-U.S. prices. Also, *** provided a list of examples of subject and nonsubject country producers undercutting its prices. Importer *** described foreign prices as higher than U.S. prices.

When foreign producers/exporters were asked to compare market prices between their home market and the United States, *** of France said U.S. prices are higher, with *** finding U.S. prices 15-30 percent higher. ***, operating out of Germany and the United Kingdom, said the European market is generally a higher price market than the United States. *** said prices are relatively comparable between markets. Others termed comparisons impossible because of the uniqueness of the product mix in the home market, and still others said prices fluctuate in line with external variables, namely production costs and exchange rates.

[16] In addition, purchaser *** indicated in its questionnaire that the typical competitive quotes that it receives normally have a variance of 3 percent or less.

[17] Furthermore, domestic interested parties alleged that the existence of a gray market for BBs shows that foreign prices are lower, as otherwise the gray market arbitrage of buying in foreign countries and selling in the United States would not exist. Hearing transcript, p. 391 (Stewart).

PRICE DATA

The Commission requested U.S. producers and importers of BBs to provide quarterly data for the total quantity and value of BBs that was/were shipped to unrelated customers in the U.S. market. Data were requested for the period January 2000-December 2005. The products for which pricing data were requested are as follows:[18]

Product 11: 203PP Z10 SF 5000 (Fafnir)/ 6203.2RS (ISO) Radial ball bearing, single row, deep groove, with two single lip contact seals and a steel retainer. ABEC 1. 17 mm bore, 40 mm OD, and 12 mm width.

Product 12: 6202ZZ–Ball bearing, single row, deep groove radial. 15 mm bore, 35 mm OD, 11 mm width with two shields. ABEC 3 tolerance.

Product 13: 5203KYY2 (Fafnir)/ 5203BLL (NTN)/ 5203KVVAN (Federal Mogul) Annular ball bearing, double row, angular contact 3200 Series with (2) double lip rubber seals. 0.640" bore, 1.5748" OD, and 1.730" width.

Product 14: 6001 RS1Z–Ball bearing, single row, deep groove radial. 12 mm bore, 28 mm OD, 8 mm width with one seal and one shield. ABEC 1 tolerances.

Product 15: 204RR6 (A4216 & A3812)–Radial ball bearing, single row with two seals. ABEC 1 tolerance.

Product 16 : BAHB 311424 B. Ball bearing Hub unit, generation 1, inner diameter 42 mm, outer diameter 75 mm, width 37 mm, weight 0.537 kg.

Product 17: 618/630 MA. Large size ball bearing, radial deep groove, bore diameter 630 mm, outer diameter 780 mm, weight 72.2 kg, cage machined solid.

Product 18: RA100-RRB + Collar–Ball bearing, single, deep groove radial with eccentric locking collar, narrow overall width. 1 inch bore, 52 mm spherical OD, 1-7/32 inch overall width with two seals. ABEC 1 tolerance.

Product 19: SR6HH5, Stainless, R6 size. ABEC 5. 0.375" bore, 0.875" OD, and 0.3125" width.

Product 20: Two bearings matched by width, angular contact of 15 degrees, 17 mm bore, 35 mm OD, 10 mm width per bearing; ABEC 7 tolerance.

Eight U.S. producers and 12 importers provided usable pricing data for sales of the requested products, although not all firms reported pricing for all products for all quarters. Pricing data reported by these firms accounted for approximately 2.9 percent of U.S. producers' shipments of BBs in 2005 (by

[18] These products are substantially different from the products in the first five-year reviews, although products 11, 12, 14 (as 15), 15 (as 16), and 18 (as 19) were in the first five-year reviews. In their November 15, 2005 comments, counsel for Pacamor Kubar and Timken recommended using only products 11 and 16 from the original investigation along with 11 new products; products 13 and 19 were from those 11 recommended products. Products 16 and 17 were recommended by counsel for SKF in their November 15, 2005 comments, while product 20 was recommended by counsel for the JBIA in their December 1, 2005 comments.

quantity), 11.0 percent of U.S. shipments of subject imports from France, 0.7 percent of U.S. shipments of subject imports from Germany, 1.2 percent of U.S. shipments of subject imports from Italy, 1.8 percent of U.S. shipments of subject imports from Japan, and 0.1 percent of U.S. shipments of subject imports from the United Kingdom.[19]

BB price data are presented in appendix H and in figures BB-V-1 to BB-V-19. Prices were requested separately for shipments to distributors and OEMs. The data usually showed substantial differences between distributor and OEM price levels, and thus are presented separately.[20]

Price Trends

Comparing the fourth quarter of 2005 with the fourth quarter of 2000, prices were often (but not always) up for both subject country and U.S. pricing products, as shown in table BB-V-1. Table BB-V-2 shows the number of instances of underselling(overselling) for each product.[21]

Price Comparisons

U.S. BB pricing products showed a mixed pattern of underselling against subject country BB pricing products, as shown in table BB-V-2.

---

[19] Compared to the coverage of the pricing data in the first five-year reviews, these percentages are higher for France, Germany, Italy, and the U.K., while lower for the United States and approximately the same as for Japan. Catalogues and price lists submitted with some questionnaires indicate that there are a wide variety of BBs, so high coverage of all shipments may not be possible with a limited number of products. These coverage percentages differ from percentages in the prehearing report mainly due to changes in the shipments from each country. By value, the pricing data represent 0.5 percent of U.S. shipments of U.S. product, 1.3 percent of U.S. shipments of French product, 0.4 of U.S. shipments of German product, 1.6 percent of U.S. shipments of Italian product, 1.3 percent of U.S. shipments of Japanese product, and 0.4 percent of U.S. shipments of U.K. product in 2005.

[20] In general, prices supplied by individual producers or importers were in the same range with prices supplied by other producers or importers. However, this was not always the case. In some products, different prices by different producers or importers result in brief and large moves up or down that are due to one producer or importer not supplying data in that quarter, and the price thus reflects only the other producers' or importers' prices.

[21] On March 28, 2006, *** submitted revised producer pricing data that included data for product ***, a product for which it had not provided data in its original questionnaire. These new data substantially changed the trend in U.S. prices for U.S. product *** in table ***, changing the trend from a 50.0 percent increase to a 5.1 percent decrease. These data also decreased the number of instances of U.S. underselling *** and increased the number of instances of U.S. overselling the same product.

Table BB-V-1
Ball bearings: Trends in prices of pricing products

Price change, fourth quarter 2000-fourth quarter 2005 (percent)							
Sales to distributors							
Product	**U.S.**	**France**	**Germany**	**Italy**	**Japan**	**Singapore**	**U.K.**
11	-5.1	--	--	--	2.1	--	--
12	--	--	--	--	--	--	--
13	151.3	--	--	--	18.1	--	--
14	--	--	--	--	--	--	--
15	-1.5	--	--	--	--	--	--
16	--	--	--	27.1	--	--	--
17	--	--	--	--	--	--	--
18	36.6	--	--	--	44.6	--	--
19	--	--	66.7	--	--	--	--
20	3.4	--	--	8.7	8.7	--	10.3
Price change, fourth quarter 2000-fourth quarter 2005 (percent)							
Sales to end users							
Product	**U.S.**	**France**	**Germany**	**Italy**	**Japan**	**Singapore**	**U.K.**
11	5.4	--	--	--	30.8	--	--
12	--	56.3	--	--	--	--	--
13	-8.1	--	--	--	-10.7	--	--
14	--	--	--	--	--	--	--
15	28.6	--	--	--	--	--	--
16	--	--	--	--	--	--	--
17	--	--	--	--	--	--	--
18	84.9	--	--	--	-2.1	--	--
19	18.3	--	64.7	--	--	--	--
20	21.7	--	--	--	-19.7	--	1.4

Note.– A '–' signifies that no comparison was possible.

Source: Appendix H, tables H-1 to H-20.

Table BB-V-2
Ball bearings: Subject country underselling (overselling) of U.S. pricing products

Quarterly instances of subject country product underselling (overselling) U.S. product						
Sales to distributors						
Product	**France**	**Germany**	**Italy**	**Japan**	**Singapore**	**U.K.**
11	--	0 (16)	0 (5)	6 (18)	--	--
12	0 (1)	--	--	--	--	--
13	--	1 (15)	--	3 (21)	--	--
14	--	--	--	--	--	--
15	--	--	--	1 (1)	--	--
16	--	--	1 (0)	--	--	--
17	--	--	--	--	--	--
18	--	--	--	24 (0)	--	--
19	--	8 (15)	--	--	--	--
20	--	--	24 (0)	23 (0)	--	24 (0)
Quarterly instances of subject country product underselling (overselling) U.S. product						
Sales to end users						
Product	**France**	**Germany**	**Italy**	**Japan**	**Singapore**	**U.K.**
11	--	--	0 (4)	0 (24)	--	--
12	0 (9)	--	--	--	--	--
13	--	--	--	16 (8)	--	--
14	--	--	--	--	--	--
15	--	--	--	--	--	--
16	--	--	--	--	--	--
17	--	--	--	--	--	--
18	--	--	--	3 (21)	--	--
19	--	22 (2)	--	--	--	--
20	--	--	10 (12)	20 (1)	--	21 (3)
Overall instances of underselling (overselling)						
All products, both channels	**0 (10)**	**31 (48)**	**35 (21)**	**96 (94)**	**0 (0)**	**45 (3)**

Overall, there were 207 instances of underselling and 176 instances of overselling.

Note.– A '–' signifies no instances of underselling or overselling.

Source: Appendix H, tables H-1 to H-10.

Figure BB-V-1
Ball bearings: Weighted-average prices to distributors, as reported by U.S. producers and importers of product 11, by quarters, January 2000-December 2005

* * * * * * *

Figure BB-V-2
Ball bearings: Weighted-average prices to end users, as reported by U.S. producers and importers of product 11, by quarters, January 2000-December 2005

* * * * * * *

Figure BB-V-3
Ball bearings: Weighted-average prices to distributors, as reported by U.S. producers and importers of product 12, by quarters, January 2000-December 2005

* * * * * * *

Figure BB-V-4
Ball bearings: Weighted-average prices to end users, as reported by U.S. producers and importers of product 12, by quarters, January 2000-December 2005

* * * * * * *

Figure BB-V-5
Ball bearings: Weighted-average prices to distributors, as reported by U.S. producers and importers of product 13, by quarters, January 2000-December 2005

* * * * * * *

Figure BB-V-6
Ball bearings: Weighted-average prices to end users, as reported by U.S. producers and importers of product 13, by quarters, January 2000-December 2005

* * * * * * *

Figure BB-V-7
Ball bearings: Weighted-average prices to end users, as reported by U.S. producers of product 14, by quarters, January 2000-December 2005

* * * * * * *

Figure BB-V-8
Ball bearings: Weighted-average prices to distributors, as reported by U.S. producers and importers of product 15, by quarters, January 2000-December 2005

* * * * * * *

Figure BB-V-9
Ball bearings: Weighted-average prices to end users, as reported by U.S. producers of product 15, by quarters, January 2000-December 2005

* * * * * * *

Figure BB-V-10
Ball bearings: Weighted-average prices to distributors, as reported by U.S. producers and importers of product 16, by quarters, January 2000-December 2005

* * * * * * *

Figure BB-V-11
Ball bearings: Weighted-average prices to end users, as reported by U.S. producers and importers of product 16, by quarters, January 2000-December 2005

* * * * * * *

Figure BB-V-12
Ball bearings: Weighted-average prices to distributors, as reported by U.S. importers of product 17, by quarters, January 2000-December 2005

* * * * * * *

Figure BB-V-13
Ball bearings: Weighted-average prices to end users, as reported by U.S. importers of product 17, by quarters, January 2000-December 2005

* * * * * * *

Figure BB-V-14
Ball bearings: Weighted-average prices to distributors, as reported by U.S. producers and importers of product 18, by quarters, January 2000-December 2005

* * * * * * *

Figure BB-V-15
Ball bearings: Weighted-average prices to end uses, as reported by U.S. producers and importers of product 18, by quarters, January 2000-December 2005

* * * * * * *

Figure BB-V-16
Ball bearings: Weighted-average prices to distributors, as reported by U.S. producers of product 19, by quarters, January 2000-December 2005

* * * * * * *

Figure BB-V-17
Ball bearings: Weighted-average prices to end users, as reported by U.S. producers of product 19, by quarters, January 2000-December 2005

* * * * * * *

Figure BB-V-18
Ball bearings: Weighted-average prices to distributors, as reported by U.S. producers and importers of product 20, by quarters, January 2000-December 2005

* * * * * * *

Figure BB-V-19
Ball bearings: Weighted-average prices to end users, as reported by U.S. producers and importers of product 20, by quarters, January 2000-December 2005

* * * * * * *

CHAPTER THREE: SPHERICAL PLAIN BEARINGS

PART I: OVERVIEW

This chapter presents information pertaining to the Commission's review involving the antidumping duty order on SPBs from France. A summary of the data collected in this review is presented in appendix table C-3. U.S. industry data are based on questionnaire responses of six firms that are believed to account for almost all of U.S. production of SPBs in 2005.[1] U.S. import data are based on official Commerce statistics adjusted to subtract products that have been excluded from the scope. Available comparative data from the original investigations, the first five-year reviews, and the current sunset review are presented in table SPB-I-1. Figure SPB-I-1 presents the trends of SPB imports from France and all other sources for the period 1985 to 2005 based on questionnaire responses from the original investigations and official Commerce statistics.

The value of SPB imports from France was much higher during the period examined in the first five-year reviews (1997-98) compared to the value reported during the original investigation (1985-87). Subject imports remained relatively high, in terms of value, until 2000 and then fell over the next three years until reaching a period high (with reference to the periods reviewed during the original investigations and both reviews) in 2004 before declining somewhat in 2005. The value of subject imports in 2005 was 40.7 percent below that reported for 2004. Nonsubject SPB imports accounted for the majority of total SPB imports in all periods.

[1] Firms that provided data during the first reviews that did not respond during the current review consist of: Frantz Manufacturing Co. (firm sales accounted for *** percent of the value of total U.S. shipments in 1998). In addition, QAI Precision Products, Inc. indicated it is no longer manufacturing SPBs in the United States (firm sales accounted for *** percent of the value of total U.S. shipments in 1998). Another firm, *** (whose firm sales accounted for *** percent of the value of total U.S. shipments in 1998), stated that ***. E-mail from ***, April 27, 2006. Shares of U.S. producers' shipments for 1998 are obtained from the confidential staff report INV-X-101 (May 8, 2000), pp. SPB-I-16 and I-17.

Table SPB-I-1
Spherical plain bearings: Comparative data on the U.S. market and industry from the original investigations, first five-year reviews, and the current five-year review, 1985-87, 1997-98, and 2000-05

Item	1985	1986	1987	1997	1998	2000	2001	2002	2003	2004	2005
(Value = *1,000 dollars*; quantity = *1,000 units*; unit values, unit labor costs, and unit financial data are *per unit*; hours worked=*1,000*; and productivity = *units per hour*)											
U.S. consumption:											
Value	***	***	***	156,063	163,226	123,562	119,721	119,918	121,995	151,175	166,205
Producers' share[1]	***	***	***	88.5	87.7	83.0	85.9	84.1	81.1	75.7	68.7
Importers' share:											
France[1]	***	***	***	0.6	0.8	1.3	0.6	0.4	0.4	1.2	0.6
All other countries[1 3]	***	***	***	10.9	11.5	15.7	13.5	15.5	18.4	23.1	30.7
Total imports'	***	***	***	11.5	12.3	17.0	14.1	15.9	18.9	24.3	31.3
Value of U.S. imports from:											
France	***	***	***	998	1,271	1,562	659	476	545	1,764	1,046
All other countries[3]	***	***	***	16,885	18,834	19,383	16,169	18,620	22,469	34,983	50,988
Total imports	***	***	***	17,883	20,105	20,945	16,828	19,097	23,014	36,747	52,034
U.S. producers':											
Capacity quantity	***	***	***	13,819	14,244	11,159	10,857	10,606	10,689	11,003	10,285
Production quantity	***	***	***	10,819	12,147	7,519	7,343	7,316	7,240	7,792	6,644
Capacity utilization[1]	***	***	***	78.3	85.3	67.4	67.6	69.0	67.7	70.8	64.6
U.S. shipments:[4]											
Quantity	***	***	***	11,570	11,907	7,328	6,846	7,035	6,981	7,320	6,307
Value	***	***	***	138,180	143,121	102,617	102,893	100,821	98,981	114,428	114,171
Unit value	(5)	(5)	(5)	$11.86	$11.94	$13.92	$14.92	$14.24	$14.10	$15.54	$18.01
EOP inventories quantity	***	***	***	6,651	8,166	1,878	2,027	1,843	1,834	1,999	1,968
Inventories/U.S. shipments[1]	***	***	***	57.5	68.6	25.6	29.6	26.2	26.3	27.3	31.2

Table continued on next page.

Table SPB-I-1--*Continued*

Spherical plain bearings: Comparative data on the U.S. market and industry from the original investigations, first five-year reviews, and the current five-year review, 1985-87, 1997-98, and 2000-05

Item	1985	1986	1987	1997	1998	2000	2001	2002	2003	2004	2005
(Value = *1,000 dollars*; quantity = *1,000 units*; unit values, unit labor costs, and unit financial data are *per unit*; hours worked=*1,000*; and productivity = *units per hour*)											
U.S. producers':											
Production workers	***	***	***	1,064	1,047	***	***	***	***	***	***
Hours worked	***	***	***	2,471	2,283	***	***	***	***	***	***
Wages paid value	***	***	***	33,808	33,453	***	***	***	***	***	***
Hourly wages	$***	***	***	$13.68	$14.65	$***	$***	$***	$***	$***	$***
Productivity[6]	(5)	(5)	(5)	4.5	5.4	***	***	***	***	***	***
Net sales	***	***	***	139,055	145,599	120,166	110,211	113,122	107,320	118,975	123,486
COGS	***	***	***	101,367	110,963	93,529	85,136	89,015	86,745	97,869	95,694
Gross profit	***	***	***	37,688	34,636	26,637	25,075	24,107	20,575	21,106	27,792
Operating income or (loss)	***	***	***	18,837	15,101	10,234	9,395	8,659	5,351	5,410	11,837
Cost of goods sold/sales[1]	***	***	***	72.9	76.2	77.8	77.2	78.7	80.8	82.3	77.5
Operating income or (loss)/sales[1]	***	***	***	13.5	10.4	8.5	8.5	7.7	5.0	4.5	9.6

[1] In percent.
[2] Less than 0.05 percent.
[3] Includes imports from countries that were subject to the original investigations and the first five-year reviews (Germany and Japan).
[4] Values include complete bearings and parts; quantities include only complete bearings; unit values are calculated on the basis of complete bearings only (the utilization of unit values is, however, limited due to the extensive range of bearings).
[5] Not available.
[6] Productivity calculated on the basis of complete bearings only.

Note.--Because of rounding, figures may not add to the totals shown. Value-based and employment data include parts of SPBs. Eight firms that were believed to account for the "vast majority" of SPB production in the United States provided trade data during the first five-year reviews while six firms provided trade data during the current five-year review. Figures on the U.S. industry for 2000-05 are believed to be comparable to that gathered during the first five-year reviews. The original investigations covered all antifriction bearings other than tapered roller bearings; producers responding to the Commission's questionnaires were believed to account for approximately 80 percent of total U.S. shipments of the subject antifriction bearings in 1987. U.S. import data are derived from official Commerce statistics, adjusted in the current five-year reviews to subtract product that has been excluded from or is not subject to the order.

Source: Data for 1985-87 compiled or derived from confidential staff report (April 24, 1989); data for 1997-98 compiled or derived from confidential staff report INV-X-101 (May 8, 2000); and data for 2000-05 compiled from responses to Commission questionnaires and (adjusted) official Commerce statistics.

Figure SPB-I-1
Spherical plain bearings: U.S. imports from France and all other sources, 1985-2005

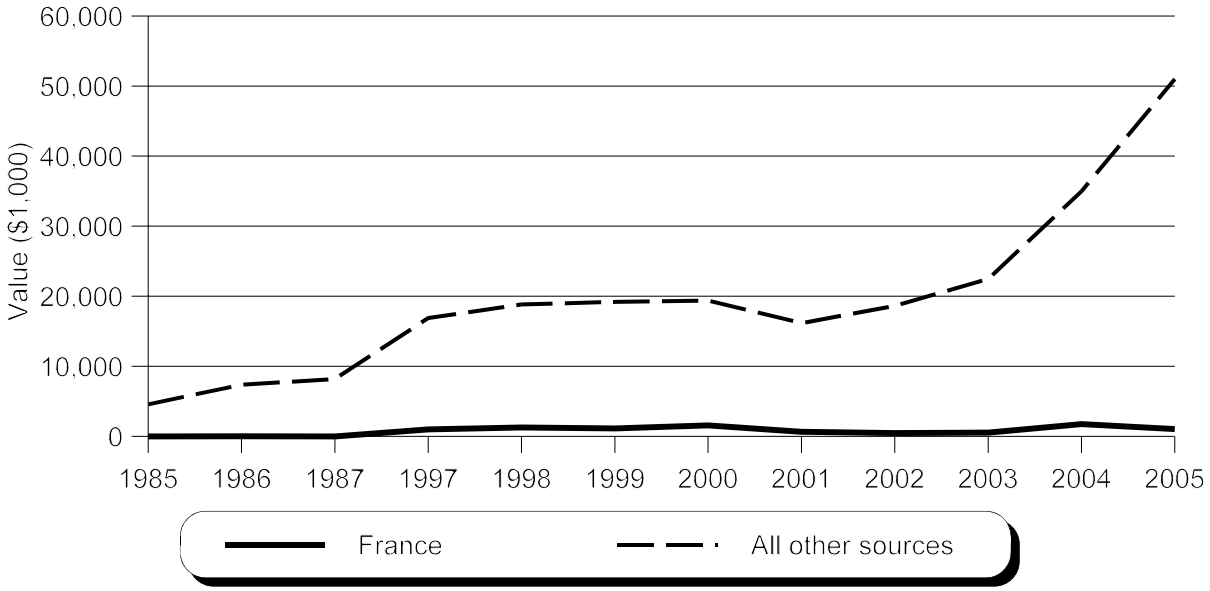

Source: Table SPB-I-1, except for 1999 which is from official Commerce statistics.

COMMERCE'S RESULTS OF SUNSET REVIEWS

On October 5, 2005, Commerce determined in its expedited second five-year review that revocation of the antidumping duty order on SPBs from France would likely lead to a continuation or recurrence of dumping.[2] The review covered imports from all manufacturers and exporters of SPBs in France. Commerce has not conducted any changed circumstance reviews or issued scope rulings with respect to SPBs from France. The original margins and sunset margins for the first and second five-year reviews are presented in the following tabulation.

Producer/exporter	Original margin *(percent)*	First five-year review margin *(percent)*	Second five-year review margin (*percent*)
SKF	39.00	39.00	39.00
All others	39.00	39.00	39.00

COMMERCE'S ADMINISTRATIVE REVIEWS

There have been 12 administrative reviews on SPBs from France since the order was imposed. The results of those reviews are presented in table SPB-I-2. In the 1995-96 administrative review,

[2] *Antifriction Bearings and Parts Thereof from France, Germany, Italy, and the United Kingdom; Five-Year Sunset Reviews of Antidumping Duty Orders; Final Results*. 70 FR 58183.

Commerce found that antidumping duties were being absorbed by SKF but has not made any other duty absorption findings.

Table SPB-I-2
Results of administrative reviews relating to spherical plain bearings from France

Producer/ exporter	Period of review	Date results published (including amended results)	Margin *(percent)*
SKF	11/9/88-4/30/90	July 11, 1991 (56 FR 31748)	26.31
ADH			4.87
INA			39.00
All others			26.31
ADH	5/1/90-4/30/91	June 24, 1992 (57 FR 28360)[1]	5.06
Dassault			2.33
INA			42.79
MBB			42.79
All others			42.79
Dassault	5/1/91-4/30/92	July 26, 1993(58 FR 39729)[2]	0.00
All others			39.00
SKF	5/1/92-4/30/93	February 28, 1995 (60 FR 10900)[3]	49.08
INA	5/1/93-4/30/94	December 17, 1996 (61 FR 66472)[4]	42.79
SKF			18.80
SKF	5/1/94-4/30/95	January 15, 1997 (62 FR 2081)[5]	42.79
SKF[6]	5/1/95-4/30/96	October 17, 1997 (62 FR 54043)	42.79
SKF	5/1/96-4/30/97	June 18, 1998 (63 FR 33320)	54.84
SKF	5/1/97-4/31/98	July 1, 1999 (64 FR 35590)	7.39
SKF	5/1/98-4/31/99	August 11, 2000 (65 FR 49219)	14.83
--	5/1/99-12/31/99	July 12, 2001 (66 FR 36551)	--
SKF	5/1/02-4/30/03	September 15, 2004 (69 FR 55574)	22.72

[1] Results of 1990-91 review were amended on July 24, 1992, December 14, 1992, and February 23, 1998.
[2] Results of 1991-92 review were amended on September 30, 1993, December 15, 1993, and April 16, 1998.
[3] Results of 1992-93 review were amended on March 31, 1995 and May 15, 1995.
[4] Results of 1993-94 review were amended on August 2, 1997. *See also* 65 FR 68974, November 15, 2000.
[5] Results of 1994-95 review were amended on March 26, 1997 and June 25, 1997.
[6] Commerce made a duty absorption finding in this instance.

Note.–Commerce rescinded its antidumping duty administrative reviews of SKF for the following periods: 5/1/00-4/31/01 (67 FR 17361, April 10, 2002); 5/1/01-4/31/02 (67 FR 65089, October 23, 2002); 5/1/03-4/30/04 (70 FR 25538, May 13, 2005); and 5/1/04-4/31/05 (70 FR 61251, October 21, 2005).

Source: Cited *Federal Register* notices.

DISTRIBUTION OF CONTINUED DUMPING AND SUBSIDY OFFSET FUNDS TO AFFECTED DOMESTIC PRODUCERS

The CDSOA (also known as the Byrd Amendment) provides that assessed duties received pursuant to antidumping or countervailing duty orders must be distributed by Customs to affected domestic producers for certain qualifying expenditures that these producers incur after the issuance of such orders.[3] Table SPB-I-3 presents CDSOA claims and disbursements for Federal fiscal years (October 1-September 30) 2001-05 relating to the antidumping duty order on SPBs from France under review. During the 2001-05 period, approximately $65 to $75 million of qualifying expenditures were claimed annually by U.S. producing entities, and approximately $300,000 was disbursed by Customs to the firms during the period.

Table SPB-I-3
Spherical plain bearings: CDSOA claims and disbursements, Federal fiscal years 2001-05

Item	2001	2002	2003	2004	2005	2001-05	2001-05
	Value *($1,000 dollars)*						(*Percent*)
Amount of claim file:[1]							
Torrington/Timken	64,551	67,951	68,985	71,559	75,278	([2])	([2])
McGill Manufacturing Co.	0	0	82,705	0	0	([2])	([2])
Total	64,551	67,951	151,689	71,559	75,278	([2])	([2])
Amount disbursed:[3]							
Torrington/Timken	59	56	29	48	73	264	88.3
McGill Manufacturing Co.	0	0	35	0	0	35	11.7
Total	59	56	64	48	73	299	100.0

[1] Qualifying expenditures incurred by domestic producers since the issuance of an order, as presented in Section I of Customs' CDSOA *Annual Reports.*
[2] Not applicable.
[3] Disbursements as presented in Section I of Customs' CDSOA *Annual Reports*.

Source: U.S. Customs and Border Protection's CDSOA *Annual Reports*. Retrieved at www.cbp.gov/xp/cgov/import/add_cvd/.

THE SUBJECT PRODUCT

For purposes of this review, Commerce has generally defined SPBs and parts thereof, whether mounted or unmounted, as antifriction bearings that employ a spherically shaped sliding element, including spherical plain rod ends. All finished parts (inner race, outer race, cage, rollers, balls, seals, shields, etc.) are included within the scope of the reviews; however, unfinished parts are included only if they have been heat-treated, or if heat treatment is not required to be performed on the part. Thus, the only unfinished parts that are not covered by this order are those that will be subject to heat treatment after importation. The size or precision grade of a bearing does not influence whether the bearing is covered by the orders. The ultimate application of a bearing also does not influence whether the bearing is covered. Bearings designed for highly specialized applications are not excluded. Any of the subject

[3] Section 754 of the Tariff Act of 1930, as amended (19 U.S.C. § 1675(c)).

SPBs, regardless of whether they may be ultimately utilized in aircraft, automobiles, or other equipment, are within the scope of this order.

The subject SPBs are primarily classified under HTS subheading 8483.30.80 and are described as plain shaft bearings. Additional parts and products that may contain SPBs are classified under HTS subheadings 3926.90.45, 4016.93.10, 4016.93.50, 6909.19.50, 8483.90.30, 8485.90.00, 8708.93.60, 8708.93.75, 8708.99.49, 8803.10.00, 8803.20.00, 8803.30.00, and 8803.90.90.

Unlike rolling element bearings, SPBs do not contain balls or rollers. These bearings primarily consist of a spherically shaped inner ring that is self-aligning in an outer ring. The inner and outer rings roll against each other. Such bearings can facilitate oscillatory or realignment motion between fixed and moving parts. In addition, they can support heavy loads at relatively low speeds.

U.S. Tariff Treatment

Imports of SPBs receive a column 1-general duty rate of 4.5 percent *ad valorem*; this is the final concession rate. Imports of parts for SPBs, products containing SPBs, and additional products included as a result of scope determinations are subject to general tariff rates ranging from free to 4.5 percent *ad valorem*.

DOMESTIC LIKE PRODUCT ISSUES

The Commission found six like products in its final determinations in the original investigations concerning antifriction bearings, other than tapered roller bearings, and parts thereof. Each product category was divided according to the type of rolling element employed, with SPBs constituting one of the six separate like products.[4] As noted in the Commission's preliminary determinations in those investigations, each like product definition included "parts and components dedicated for use in the particular type of bearing, finished and unfinished bearings, and housed and mounted bearings containing the specified rolling element."[5] In its first five-year review determinations, the Commission found that TRBs, BBs, CRBs, and SPBs were separate domestic like products consistent with Commerce's scope definitions.[6]

For purposes of the notice instituting the current five-year reviews, the parties were instructed to report information on three domestic industries, each devoted to the production of one of the following three domestic like products: (1) BBs, (2) SPBs, and (3) TRBs. The domestic interested parties as well as INA, Nachi-Fujikoshi, Nachi Technology, Nachi America, NMB/Pelmec, NSK, and NTN indicated in their responses to the Commission's notice of institution in these reviews that they agreed with the Commission's definitions of domestic like products and domestic industries as consisting of (1) BBs,

---

[4] Negative determinations were reached with respect to spherical roller bearings, needle roller bearings and slewing rings. *Antifriction Bearings (Other than Tapered Roller Bearings) and Parts Thereof from the Federal Republic of Germany, France, Italy, Japan, Romania, Singapore, Sweden, Thailand, and the United Kingdom,* Investigations Nos. 303-TA-19 and 20 (Final) and 731-TA-391 through 399 (Final), USITC Publication. 2185, May 1989, pp. 1-5, 12-18, and 33.

[5] *Antifriction Bearings (Other than Tapered Roller Bearings) and Parts Thereof from the Federal Republic of Germany, France, Italy, Japan, Romania, Singapore, Sweden, Thailand, and the United Kingdom,* Investigations Nos. 303-TA-19 and 20 (Preliminary) and 731-TA-391 through 399 (Preliminary), USITC Publication. 2083, May 1988, p. 22.

[6] *Certain Bearings From China, France, Germany, Hungary, Italy, Japan, Romania, Singapore, Sweden, and the United Kingdom, Investigations Nos. AA1921-143, 731-TA-341, 731-TA-343-345, 731-TA-391-397, and 731-TA-399 (Review),* USITC Publication 3309, June 2000, p. 12. As noted earlier, the Commission subsequently reached negative determinations with respect to the outstanding orders on CRBs.

(2) SPBs, and (3) TRBs.[7] Similarly, the domestic interested parties as well as respondent SKF indicated in their prehearing briefs that they also supported the Commission's definition of domestic like products.[8]

Physical Characteristics and Uses

As noted, SPBs do not include rolling elements but instead contain two rings (outer and inner) with spherical sliding surfaces that roll against each other. Rod ends, a common type of housed SPB, incorporate SPBs and have a male or female thread or welding shank (figures SPB-I-2 and SPB-I-3). SPBs accommodate oscillating and tilting movements under heavy load conditions and can facilitate

Figure SPB-I-2.–Rod end bearing

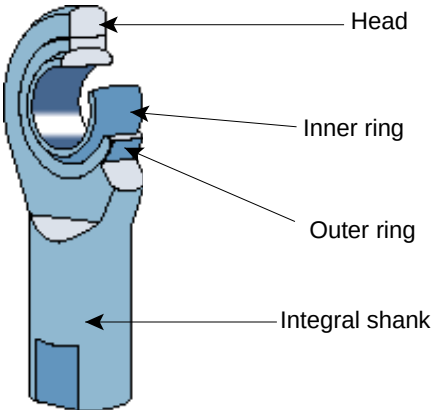

Source: SKF.

Figure SPB-I-3.–Spherical plain bearing

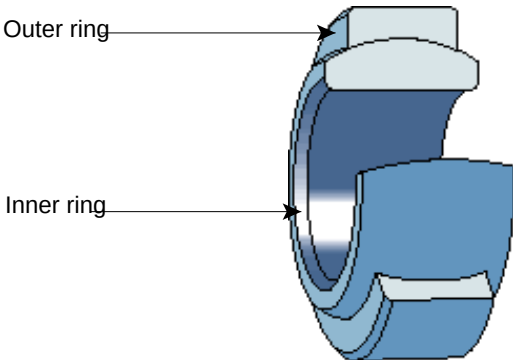

Source: SKF.

realignment motion. Such bearings have low speed capacity and are capable of handling radial loads. SPBs are commonly utilized in off-highway vehicles, construction machinery, agricultural machinery, mining equipment, logging equipment, aerospace applications, and hydraulic cylinders. According to data collected in response to Commission questionnaires, nearly all domestic and foreign producers and U.S. importers claim that there have not been any changes in the end uses of SPBs since the first review, and no changes in end uses are expected in the future.

U.S. producers and importers of subject SPBs from France reported shipping both standard SPBs and custom SPBs within the U.S. market.[9] The following tabulation presents the shares of the value of shipments in 2005 of standard and custom SPBs reported in response to Commission questionnaires:

---

[7] Caterpillar indicated that it did not challenge the Commission's definitions and Koyo (JTEKT) indicated that it took no position on the Commission's definitions. No other interested parties responding to the Commission's notice of institution provided any comments concerning the Commission's definitions.

[8] Domestic parties' prehearing brief, p. 1, and SKF's prehearing brief, p. 3.

[9] *See* the notes to table SPB-I-4 for the definitions of standard and customs used in Commission questionnaires. The definitions of standard and custom bearings are based on proposals by respondent interested parties in the first and second set of comments on the draft questionnaires circulated by Commission staff. *See* staff e-mail, dated November 11, 2005, where parties were requested to comment on whether the terms standard and custom bearings were clearly demarcated in the industry.

Item	Standard bearings	Custom bearings
	Share of value (*percent*)	
U.S. producers	6.1	93.9
Subject imports from France	19.8	80.2

Table SPB-I-4 presents the shares of shipments for a series of end-use categories for both standard and custom bearings. With respect to the relatively small category of standard bearings, the agricultural and construction segment of the OEM market was supplied only by domestically produced bearings while the OEM aerospace segment was supplied only by U.S. imports from France. Further, the automotive and machinery, equipment, and supplier segments of the aftermarket were supplied only by domestically produced bearings while U.S. imports from France were reported to be shipped entirely into the "all other aftermarket" category. With respect to custom bearings, which as shown above accounted for the majority of U.S. shipments of SPBs, both U.S.-produced bearings and U.S. imports from France were shipped, in large part, to the OEM aerospace segment. However, the OEM-other general purpose machinery and equipment category was supplied only by U.S. produced SPBs as was most of the custom aftermarket.

Table SPB-I-4
Spherical plain bearings: U.S. shipments, by standard and custom and by end-use categories, 2005

* * * * * * *

Manufacturing Process

The manufacturing process for antifriction bearings, including SPBs, is described in the section entitled *The Product* in the *Introduction and General Overview* to this report. SPBs are generally produced on dedicated machinery, and a producer cannot switch production of SPBs to other types of bearings without reconfiguration of production lines, which adds to costs. Questionnaire data indicate that U.S. and foreign producers have not, and do not anticipate, producing other products on their equipment and machinery and/or with the same production workers manufacturing certain SPBs. U.S. and foreign producers stated that their firms were unable to switch production between certain SPBs and other products in response to relative price changes between products. In response to questionnaires, foreign producers largely indicated that there have been no significant changes in production technology for certain SPBs since the first review.

Interchangeability and Customer and Producer Perceptions

While a majority of responding producers, importers, and purchasers stated that U.S. and French SPBs were always or frequently interchangeable, others did raise issues such as SPBs being designed to metric versus English systems as being barriers to interchangeability. *See* Part II of this chapter for a complete discussion of product interchangeability.

Channels of Distribution

Both domestically produced SPBs and subject imports are sold in the OEM and aftermarket channels of distribution (table SPB-I-5). According to questionnaire data, U.S. producers shipped 77.3 percent of their U.S. shipments of SPBs to end users/OEMs in 2005, and the remaining 22.7 percent to distributors/aftermarket customers.[10] By comparison, importers shipped 83.2 percent of their U.S. shipments of SPBs to end users/OEMs in 2005 and the remaining 16.8 percent to distributors/ aftermarket customers.

Table SPB-I-5
Spherical plain bearings: Channels of distribution, 2000-05[1]

Item	2000	2001	2002	2003	2004	2005
	Share of quantity (*percent*)					
U.S. producers:						
End users/OEMs not as a Buy America sale	***	***	***	***	***	***
End users/OEM as a Buy America sale	***	***	***	***	***	***
Total (end users/OEMs)	75.2	77.8	78.4	78.6	78.6	77.3
Distributors/aftermarket not as a Buy America sale	***	***	***	***	***	***
Distributors/aftermarket as a Buy America sale	***	***	***	***	***	***
Total (distributors/aftermarket)	24.8	22.2	21.6	21.4	21.4	22.7
Total U.S. shipments	100.0	100.0	100.0	100.0	100.0	100.0
Imports from France (subject):						
End users/OEMs	86.8	91.6	79.2	88.5	92.4	83.2
Distributors/aftermarket	13.2	8.4	20.8	11.5	7.6	16.8
Total U.S. shipments	100.0	100.0	100.0	100.0	100.0	100.0

[1] These data are for complete bearings and exclude parts.

Note.–***.

Source: Compiled from data submitted in response to Commission questionnaires.

Price

In general, the global market for all antifriction bearings can be characterized as price-competitive, particularly with respect to commodity-type bearings.[11] Foreign SPB producers responding to the Commission's questionnaire reported that they were unable to make a comparison between home, U.S., and third-country SPB prices.

[10] "Buy-American" sales were insignificant throughout the period examined.

[11] The McGraw-Hill Companies and the U.S. Department of Commerce, International Trade Administration, *U.S. Industry & Trade Outlook '99* (Ohio: McGraw Hill, 1999), p. 15-8.

U.S. MARKET PARTICIPANTS

U.S. Producers

Six SPB producers[12] reported data for the period covered in the current five-year review, down from the nine firms that reported data for the period covered in the first five-year review (table SPB-I-6). As indicated earlier in this chapter, QA1 Precision Products, Inc., did not respond to the Commission's questionnaire, indicating that it no longer manufactured SPBs in the United States. Another previously identified SPB producer, ***, had not, in fact, manufactured SPBs during 1997-98. During the 2000-05 period, two of the responding five firms stopped producing SPBs. Emerson Power Transmission discontinued its SPB operations in 2001 when ***, and SKF *** in ***. In addition, in February 2003, the former Torrington operations were acquired by Timken, which had not previously reported SPB production. *** was the largest producer during the first five-year review, accounting for *** percent of the value of U.S. shipments in 1998, followed by *** with a ***-percent share.[13] Table SPB-I-6 also presents information on SPBs with respect to U.S. producers' positions on continuation of the order, shares of the value of U.S. shipments, parent firms, and related foreign producers. As shown, ***, accounting for *** percent of the value of U.S. shipments in 2005. Table SPB-I-7 provides information reported by firms in their producer questionnaire responses on changes in the character of firm operations or organization relating to the production of SPBs since January 1, 2000.

---

[12] These firms are: Alinabal Inc. ("Alinabal"), Emerson Power Transmission Corp. ("Emerson"), New Hampshire Ball Bearings, Inc. ("New Hampshire"), RBC Bearings, Inc. (RBC), SKF USA, Inc. (SKF), and The Timken Co. ("Timken"). RBC, a *** domestic producer of SPBs, did not initially provide a response to the Commission's producer questionnaire. On March 24, 2006, the Commission issued an administrative subpoena to RBC, with a return date of April 3, 2006. After receiving a response from RBC that did not fully comply with the subpoena, on May 10, 2006, the Commission filed a Petition with the United States District Court for the District of Columbia seeking judicial enforcement of the subpoena. On June 2, 2006, the Court issued an Order of enforcement requiring RBC to comply with the Commission's subpoena by June 16, 2006. On June 9, 2006, RBC provided the Commission with additional information regarding its SPB operations. The additional information provided by RBC was finally in compliance with the Commission's March 24, 2006 subpoena.

[13] Shares of U.S. producers' shipments for 1998 were obtained from the confidential staff report INV-X-101 (May 8, 2000).

Table SPB-I-6
Spherical plain bearings: U.S. producers' positions on continuation of the order, shares of the value of reported U.S. shipments in 2005, locations of production facilities, parent firm(s), and related foreign producer(s)

Firm	Position on continuation of the order	Shares of the value of reported U.S. shipments *(percent)*	Parent firm(s)	Related SPB foreign producer(s)
Alinabal, Inc.	***	***	Alinabal Holdings (Milford, CT)	None
Emerson Power Transmission Corp.	Support	(1)	Emerson Electric (St. Louis, MO)	Transmissions de Pontencia Emerson, Mexico
New Hampshire Ball Bearings, Inc.	***	***	NMB (USA), Inc. (Chatsworth, CA), holding company for Minebea Co., Ltd. (Japan)	Minebea maintains factories in Japan and the UK
RBC Bearings, Inc. (Roller Bearing Co. of America, Heim Bearings Co., Transport Dynamics Co., and RBC Aircraft Products, Inc.)	***	***	None	None
SKF USA	Oppose	***	AB SKF (Sweden)	SKF GmbH (Germany), SKF Aerospace France
The Timken Co. (Timken U.S. Corp., and MPB Corp.)	Support	***	Timken U.S. Corp. (Torrington, CT) and MPB Corp. (Keene, NH) are ***-owned subsidiaries of The Timken Co. (Canton, OH)	Wuxi plant (China)
Total	--	100.0	--	--

[1] ***.

Note.-Shares of shipments are based on complete SPBs and parts of SPBs. Firms listed above that reported the production of SPB parts consisted of: ***.

Source: Compiled from data submitted in response to Commission questionnaires.

Table SPB-I-7
Spherical plain bearings: Reported changes in the character of firm operations or organization relating to the production operations since January 1, 2000

Firm	Plant location	Time period	Reported change[1]
Emerson	Valparaiso, IN	2001	***.
	Valparaiso, IN	March 2001	***.
New Hampshire	Not listed	2002 2005	***.
RBC	Torrington, CT	2003	***.
	Not listed	2005	***.
SKF USA	Altoona, PA	2004	***.

[1] Reported changes consist of (1) plant openings, relocations, expansions, acquisitions, consolidations, closures, or prolonged shutdowns; (2) curtailment of production; (3) revision of labor agreements; or (4) any other changes. Only changes that apply to firm's U.S. operations are listed in this table.

Note.--The following firms reported not having experienced any changes in the character of their operations since January 1, 2000: ***.

Source: Compiled from data submitted in response to Commission questionnaires.

For plant locations *see* the tabulation below.

Firm	Plant location(s)[1]
Alinabal	Milford, CT
Emerson	McGill Manufacturing Co. (Valparaiso, IN)
New Hampshire	Laconia, NH
RBC	Roller Bearing Co. of America (West Trenton, NJ and Hartsville, SC); Heim Bearings Co. (Fairfield, CT); Transport Dynamics Co. (Santa Ana, CA), and RBC Aircraft Products, Inc. (Torrington, CT)
SKF USA	Altoona, PA (2000-04)
Timken	Union, SC

[1] Location, for some firms, may refer to headquarters.

Source: Compiled from data submitted in response to Commission questionnaires.

Both the UAW and the USW support the continuation of the antidumping duty order on SPBs from France. The following tabulation provides a list of facilities producing SPBs that employ workers represented by these unions:[14]

Company (subsidiary/plant)	Facility location	Representation
Minebea Co. (New Hampshire Ball Bearings, Astro Division)	Laconia, NH	USW
RBC Bearings, Inc. (Heim Bearings Co.)	Fairfield, CT	UAW
RBC Bearings, Inc.	West Trenton, NJ	UAW

The tabulation below summarizes U.S. producers' positions regarding revocation of the SPB order and the shares of the value of U.S. shipments held by U.S.-domiciled and foreign-domiciled U.S. SPB producers in both 1998 and 2005 (*see* table SPB-I-7):

* * * * * * *

U.S. Importers

Importers of SPBs are located throughout the United States. Virtually all of the largest importers of SPBs responded to the questionnaire. As shown in table SPB-I-8, U.S. importers included ***. The largest U.S. importer, ***, indicated that *** of its U.S. imports were of ***. With respect to the other substantial U.S. importers, *** while *** reported ***. *** U.S. producer reported direct imports of SPBs from France over the period of this review.

Table SPB-I-8
Spherical plain bearings: U.S. importers' reported subject U.S. imports in 2005, shares of the value of reported subject U.S. imports, parent firm(s), and related domestic manufacturer(s)

* * * * * * *

U.S. Purchasers

Major purchasers of SPBs include ***. The largest reporting purchaser's total SPB purchases accounted for less than *** percent of U.S. consumption in 2005, and a majority of SPB purchasers that reported purchases (especially the larger purchasers) bought SPBs from more than one country.

SPB purchasers were asked if related firms imported or produced certain bearings. Thirteen said no related firms, domestic or foreign, imported certain bearings. Six (***) said related firms did import. (While *** answered that no related firms imported bearings, it listed affiliated companies.) Twenty purchasers said no related firms produced bearings, while three (***) indicated they had related firms producing bearings. (While *** did not respond that related firms produce bearings, the Commission received questionnaires from related firms producing bearings.)

[14] Compiled from letter submitted by counsel to the domestic interested parties, May 16, 2006.

APPARENT U.S. CONSUMPTION AND MARKET SHARES

The demand for SPBs is derived from its end-use markets, which are primarily the agricultural and construction equipment industries as well as the aerospace market. Table SPB-I-9 presents data on U.S. consumption and market shares of SPBs and table SPB-I-10 presents data on the ratio of subject imports to U.S. production. The value of apparent consumption of SPBs fell by 3.1 percent from 2000 to 2001 and then remained comparatively level over the next two years before increasing by 23.9 percent from 2003 to 2004 and by 9.9 percent from 2004 to 2005 (table SPB-I-9). The market share of U.S. producers' shipments fluctuated within a range of about 81-86 percent on the basis of value from 2000 to 2003, then fell to 75.7 percent in 2004 and to 68.7 percent in 2005 as the market share of U.S. imports from nonsubject sources rose. The market share of U.S. imports from France remained below 2 percent throughout the period examined.

Table SPB-I-9
Spherical plain bearings: U.S. shipments of domestic product, U.S. imports by sources, apparent U.S. consumption, and market shares, 2000-05[1]

Item	2000	2001	2002	2003	2004	2005
			Value (*1,000 dollars*)			
U.S. producers' shipments	102,617	102,893	100,821	98,981	114,428	114,171
U.S. imports from –						
France (subject)	1,562	659	476	545	1,764	1,046
China	2,836	2,967	3,204	4,293	4,950	9,136
Germany	3,070	2,128	3,628	4,429	10,654	15,160
Japan	4,341	3,742	4,560	4,931	6,040	5,846
Mexico	2,287	1,276	428	215	431	6,010
All others	6,848	6,055	6,800	8,601	12,908	14,836
Subtotal (nonsubject)	19,383	16,169	18,620	22,469	34,983	50,988
Total imports	20,945	16,828	19,097	23,014	36,747	52,034
Apparent consumption	123,562	119,721	119,918	121,995	151,175	166,205
			Share of value *(percent)*			
U.S. producers' U.S. shipments	83.0	85.9	84.1	81.1	75.7	68.7
U.S. imports from –						
France (subject)	1.3	0.6	0.4	0.4	1.2	0.6
China	2.3	2.5	2.7	3.5	3.3	5.5
Germany	2.5	1.8	3.0	3.6	7.0	9.1
Japan	3.5	3.1	3.8	4.0	4.0	3.5
Mexico	1.9	1.1	0.4	0.2	0.3	3.6
All others	5.5	5.1	5.7	7.1	8.5	8.9
Subtotal (nonsubject)	15.7	13.5	15.5	18.4	23.1	30.7
Total imports	17.0	14.1	15.9	18.9	24.3	31.3

[1] These data are for both complete bearings and parts.

Source: Compiled from data submitted in response to Commission questionnaires and from official Commerce statistics.

Table SPB-I-10
Spherical plain bearings: U.S. production, subject imports from France, and ratio to production, 2000-05

Item	2000	2001	2002	2003	2004	2005
			Quantity *(1,000 complete bearings)*			
U.S. production	7,519	7,343	7,316	7,240	7,792	6,644
Subject U.S. imports from France	36	35	69	31	413	280
			Ratio to production *(percent)*			
Subject U.S. imports from France	0.5	0.5	0.9	0.4	5.3	4.2

Source: Compiled from data submitted in response to Commission questionnaires and from official Commerce statistics.

PART II: CONDITIONS OF COMPETITION IN THE U.S. MARKET

INTRODUCTION

A variety of industries demand SPBs, and that demand has risen since 2000. There are multiple U.S. suppliers as well as major import sources, but there have been some reports of tight supply in recent years. Purchasers include construction and aerospace parts manufacturers.

U.S. MARKET SEGMENTS

SPBs are sold by suppliers (producers and importers) to either OEMs or distributors. Distributors assist customers with maintenance, repair, and expertise in selecting the appropriate replacement bearing.[1] SPBs for OEMs may be custom-designed while SPBs for distributors are more likely to fit into slightly broader categories to be sold to the aftermarket. Domestic interested parties stated that supplying the OEM market is often important for supplying the aftermarket, as aftermarket sales are often of the same brand as the parts they are replacing.[2] Regardless of whether they are sold to OEMs or distributors, though, SPBs are sold in a wide variety of specifications.

Some SPBs are sold to U.S. defense industries that may have U.S.-made requirements as specified in the DFAR. When asked if there were any "Buy American" requirements in the U.S. market, four producers and eight importers[3] answered that there were, while one producer and eight importers answered that there were not. *** explained that "Buy American" regulations may change year-to-year and may be subject to waivers on occasion. *** expected that a pending rewrite of DFAR would remove some of the protections for U.S. producers. *** explained that even when export control or defense regulations are not the reason for favoring U.S.-made bearings, some aerospace customers prefer U.S.-made bearings so that the bearing producer could share liability in the event of the catastrophic failure of an aircraft part.

Geographic Markets

SPBs are generally sold to national markets. Six producers and 18 importers indicated that they serve a national market, while no producers and two importers indicated that they serve primarily smaller regional markets.

SUPPLY AND DEMAND CONSIDERATIONS

U.S. Supply

The major suppliers of SPBs in the U.S. market are U.S. producers (some of whom are affiliated with multinational companies either based in the United States or other countries) and importers of nonsubject country SPBs. Imports from France are currently a small part of the U.S. market.

---

[1] Hearing transcript, p. 232 (Hooser).

[2] Hearing transcript, pp. 166-167 (Swinehart and Griffith).

[3] The following firms submitted both an importer's and a producer's questionnaire: ***. For the purposes of this section, the responses of these firms have been counted both as a producer and as an importer. In almost all cases, the answers to the producer's and importer's questionnaires were substantially similar or identical as the firm often referred to its response in the other questionnaire.

Domestic Production

Based on available information, U.S. SPB producers are likely to respond to changes in demand with moderately large changes in the quantity of shipments of U.S.-produced SPBs to the U.S. market. The main contributing factor to this degree of responsiveness of supply is the low capacity utilization of U.S. producers in 2005, although inventories and export shipments are not high.

Producers and importers were asked if there were any changes in factors of supply[4] that had affected the availability of U.S.-produced SPBs in the U.S. market since January 2000. Five producers and 14 importers answered no while one producer and seven importers answered yes, citing increased energy, labor, medical, and transportation costs, as well as continued imports from other countries.[5]

Purchasers were also asked if there had been any changes in the factors affecting supply since January 1, 2000. Twenty-one SPB purchasers said yes, and three said no. Most firms that answered yes described increased raw material (steel, natural gas, etc.) prices driving decreased availability of bearings.[6] *** remarked that it had seen tighter worldwide supply for the last year and a half due to worldwide steel shortages. It continued that lead times had increased, but that prices had increased only moderately and at roughly the same rate as inflation. *** stated that steel availability became limited in 2004, forcing the price of bearing quality steel up 30 to 40 percent. *** estimated that raw material costs had risen 40 to 50 percent in the last two years. *** described present availability (since 2004) as "terrible." *** attributed price increases to *** controlling a large segment of the steel for bearings and not being able to increase output in 2004 and 2005.

Purchasers were asked if they had experienced a supply shortage of any certain bearings and/or had been placed on allocation. Five SPB purchasers answered no, though two of those noted there had been longer lead times. Eight SPB purchasers answered yes, although some of those stressed shortages in TRBs rather than SPBs.[7] However, *** named SPBs from *** as being on allocation. *** noted that the shortage was particularly acute for large-bore products.

Three producers and 16 importers stated that there had not been any changes in the product mix, range, or marketing of SPBs since January 2000, but three producers and five importers stated that there had been. Among those that did report changes, *** described its own increased efforts to capture a larger share of the market for physically larger, more specialized bearings in medical, construction, and mining equipment. *** saw increased internet sales.

Five producers and 18 importers did not anticipate any changes in the product mix, range, or marketing of SPBs, while one producer and three importers did, mostly citing trends they had indicated in answer to other questions, such as increased offshore production of products using SPBs, increased marketing over the internet, and an increased trend towards more custom bearings.

---

[4] The question specified changes other than increased raw material costs.

[5] *** cited continued dumping by foreign competitors while *** cited overseas production by firms such as Timken and NSK. Producers were also asked if they anticipated any changes in the availability of U.S.-produced certain bearings in the U.S. market in the future. Four anticipated no change, while two predicted a decrease. *** explained that it and its competitors had increased capacity, and thus expected to see an overcapacity situation by 2008. *** predicted more sourcing of SPBs from outside the United States due to purchasers' low-price demands.

[6] Several specified that the effect was particularly acute for TRBs, without mentioning whether the effect was the same for SPBs.

[7] At the hearing, representatives of Timken, Emerson, and Pacamor Kubar said that they were not aware that SPBs were on allocation. Hearing transcript, pp. 83-84 (Griffith, Swinehart, and Sperrazza).

Industry capacity

U.S. capacity utilization dropped substantially in 2005. According to producers, equipment capacity and available labor are the main constraints on SPB production.

Alternative markets

Most producers described shifting sales to alternative country markets as ranging from difficult to impossible.[8] Certification, discrepancies between metric and English measurements, competition from foreign suppliers, and local production all made such shifts difficult. In addition, *** supplied a list of tariffs on U.S. bearings from a variety of large developing countries,[9] and added that markets in Japan and Europe are also difficult to access due to regulations in Japan; exclusive relationships between producers and distributors in Japan; and strong market share dominance of major European producers in Europe. At the hearing, domestic interested parties said that while 90 percent of the certain bearings consumed in Japan come from Japanese-based producers, and 80 percent of the certain bearings consumed in the E.U. come from E.U.-based producers, only 70 percent of certain bearings consumed in the United States come from U.S.-based producers.[10]

Producers were asked if their exports were subject to tariff or non-tariff barriers in other countries. Four said no and one said yes.

Production alternatives

There are few production alternatives for SPBs. Five SPB producers stated that there were no production substitutes for SPBs, and the one who indicated that there were cited other types of bearings (e.g., roller bearings) as potential substitutes.

Subject Imports

Based on available information, French producers are likely to respond to changes in demand with moderate changes in the quantity of shipments of SPBs to the U.S. market. The main contributing factor to this degree of responsiveness of supply is the high level of exports relative to capacity.

Two French producers/exporters[11] indicated that the product range, product mix, and marketing of French SPBs are not different than in the U.S. market, and that changes to these markets are not anticipated in the future. *** described competition in France as intense, mainly due to imports. Its main competitor in Europe is ***.[12]

Importers were asked if they had anticipated any changes in the availability of subject imports in the future. Sixteen importers anticipated no changes, but three importers predicted a decrease while two

---

[8] However, *** reported that distribution chains already exist, so shifting would be "fairly simple."

[9] These reported tariffs on imports of U.S. SPBs included applied tariff rates of 8 percent in China, 2.5 to 9 percent in Taiwan, 30 percent in India, 5 percent in Indonesia, 8 to 13 percent in Korea, and 10 percent in Thailand.

[10] Hearing transcript, p. 133 (Griffith).

[11] The remaining French producer/exporter, ***, did not answer the market factors questions as it ***.

[12] It also mentioned that its main competitor in Japan is *** and in the United States its main competitors are ***.

importers forecast an increase. *** said that overseas demand for SPBs, from both Europe as well as Asia, would decrease availability of subject SPBs in the United States.[13]

Industry capacity

Commission data on French SPB production show relatively low levels of capacity. However, given that U.S. imports of SPBs from France in 2004 and 2005 are higher than current Commission data for reported French capacity, it is likely that there is additional French capacity for shipping SPBs to the United States. *** named machine capacity as its production constraint.

Alternative markets

Sixteen importers described shifting sales to alternative country markets as ranging from difficult to impossible.[14] Customer approval, certification, discrepancies between metric and English measurements, U.S. DFAR requirements, and local production all made such shifts difficult. Among French producers/exporters, *** reported that it has an "obligation" to provide spare parts to its end users worldwide. *** said it generally does not shift sales between markets, as it sells to most countries via its subsidiaries in those countries.

Importers were asked if their exports were subject to tariff or non-tariff barriers in other countries. Thirteen said no and five said yes.

Production alternatives

Both responding French producers/exporters of SPBs indicated an inability to transfer equipment and related workers between production of SPBs and other products. *** added the caveat that the same production inputs could produce other bearing types in similar size ranges.

Nonsubject Imports

Producers and over half of importers were in general agreement that the availability of imports from nonsubject countries had increased since January 2000. Four producers and 12 importers said that the availability of SPBs from nonsubject countries had increased since 2000, while two producers and nine importers said that it had not changed. *** reported "substantially" and "significantly" increased imports from China, Germany, and Japan. *** also saw a "substantial" increase in imports from nonsubject countries, and *** saw increased imports from Eastern European countries.

Because China was alleged to be a major new force in SPB production, producers and importers were asked to describe the effect that China has had on the supply and demand of SPBs. Five producers[15] and 11 importers described Chinese production as increasing, with most of those adding that Chinese

[13] Among French producers/exporters, both *** and *** anticipated no change in the availability of French SPBs in the U.S. market in the future.

[14] Only *** indicated that it could shift sales easily within 12 months.

[15] One of these producers, ***, produces SPBs but only referenced BBs in its answer.

SPBs are also coming to the United States in greater numbers. A majority of producers and importers who answered that the supply of Chinese SPBs was increasing described higher volumes of Chinese SPBs being imported into the United States, often at low prices, and capturing market share.

U.S. Demand

Demand Characteristics

One U.S. producer described bearings demand as depending on the number of "turning wheels" in the economy, i.e., activity in the industrial, automotive, and transportation sectors.[16] SPB demand is primarily driven by the manufacture of machinery and equipment in many industries, including automotive, aerospace, construction, manufacturing, medical (including dental), and mining, but especially aerospace and construction.[17] *** reported that over *** percent of its SPBs are used in aerospace applications. Emerson described material handling, trucks, and trains as high demand sectors now, while Timken saw strong recent growth in trucks as tapering off along with bearing demand from the automotive sector.[18]

Demand for the final products in SPB-using industries is usually a function of overall U.S. economic activity. U.S. GDP grew solidly in 2000, softened during 2001-02, and regained strength in 2003. GDP has grown at over six percent in 2004 and 2005,[19] and the OECD forecasts similar near-term growth.[20] U.S. manufacturing activity began shrinking in August 2000 and did not begin to expand again until February 2002. U.S. manufacturing activity was up and down until May 2003, and has been expanding since then, albeit at a slower pace at the end of 2005 compared to the middle of 2004.[21]

In the construction and aerospace sectors, industry groups are often touting recent success. The AIA estimated aerospace industry growth at *** percent between 2004 and 2005, and forecast growth of

---

[16] Hearing transcript, p. 79 (Swinehart).

[17] Five producers and 23 importers had not observed any changes in the end uses of SPBs since 2000. Similarly, six producers and 23 importers did not anticipate any changes in the end uses of SPBs. Among French producers/exporters, *** stated that the main applications of SPBs are in aircraft, namely flight control, landing gear, engine attachment, and wing. The end uses do not differ from market to market. Neither responding French producer/exporter saw a change in end uses since 2000, and neither forecasts a future change in end uses.

According to purchasers, SPBs are used in a variety of manufactured products including fuel dispensers, automotive components, pumps, and heaters. Twenty-one SPB purchasers indicated that there had been no changes in the end uses for certain bearings, while *** noted that end uses vary by customer requests. *** said that market gains by *** had meant that some certain bearings were available only from non-U.S. sources. Nineteen purchasers did not anticipate any changes in the end uses of certain bearings, while four did, citing changes in technology and final product lines.

[18] Hearing transcript, pp. 78-79 (Griffith and Swinehart).

[19] See GDP statistics from the Bureau of Economic Analysis, found at www.bea.gov, retrieved February 28, 2006.

[20] OECD Economic Survey of the United States 2005 from October 27, 2005. See www.oecd.org/documentprint/0,2744,en_2649_34569_35513867_1_1_1_1,00.html, retrieved March 1, 2006. See also the Federal Reserve Bank of Philadelphia's Livingstone Survey (of economic forecasters), December 2005, found at www.phil.frb.org/files/liv/livdec05.pdf, retrieved March 10, 2006.

[21] This analysis is based on using the Institute for Supply Management's PMI Composite Index. See www.ism.ws/ISMReport/OverviewofPMI.cfm and www.research.stlouisfed.org/fred2/data/NAPM.txt, retrieved March 10, 2006.

*** percent for 2006.[22] In construction, the CIT construction industry survey showed high levels of optimism among contractors and construction equipment distributors.[23]

Purchasers were asked if the certain bearings market is subject to distinctive business cycles. Nineteen SPB purchasers answered no, and four answered yes. *** said that industrial markets such as mining are cyclical, with the usual cycle lasting three to five years. *** also tied bearings business cycles to downstream demand in automotive and other manufacturing. Among those answering no, *** noted that business cycles are generally steady since there are many non-automotive uses for certain bearings.

Purchasers were also asked if the certain bearings market is subject to distinctive conditions of competition. Fifteen SPB purchasers answered no, and seven answered yes. Those answering yes cited the antidumping duties, the presence of imported certain bearings, and the current lack of availability of some certain bearings.

Purchasers were further asked if the emergence of new markets for certain bearings had affected the business cycles or conditions of competition for certain bearings. Eighteen SPB purchasers answered no, and four answered yes, citing increased Asian consumption causing increased lead times and changes in general manufacturing conditions.

Demand Trends

Demand for SPBs strengthened after 2002, and most industry participants expect stable to increasing demand in the near future. However, some large purchasers (e.g., Delphi, Ford, and GM) are having difficulty, and there are potential problems with specific demand sectors (such as heavy trucks).[24]

At the hearing, Emerson described material handling, trucks, and trains as high demand sectors now, while Timken saw strong recent growth in trucks as tapering off along with bearing demand from the automotive sector.[25] Caterpillar projected more strong demand for its products through 2010, while NSK, NTN, and SKF saw reduced automotive demand balanced by strong industrial demand.[26]

Purchasers were asked how demand for their final products incorporating bearings had changed since January 1, 2000. Three SPB purchasers reported that this demand was unchanged while 14 reported that it had increased, sometimes citing increased automobile production. One reported decreased demand for its final products.

Producers and importers were asked how demand for SPBs had changed since January 2000. Two producers and eight importers reported increased demand, citing the strong aerospace industry and the U.S. economy overall. Three producers and two importers said that demand was unchanged. *** characterized SPB demand as greatly influenced by construction and aircraft equipment demand, both of which it said declined over 2001-03 but recovered during 2004-05. Finally, two importers responded that demand had decreased, citing the declining U.S. auto industry and the decreased demand for spindle chains, a subassembly that uses SPBs.[27]

---

[22] See *** producers' questionnaire, end attachment.

[23] Http://www.cit.com/NR/rdonlyres/emg4zahhl6ibwpyui2ru6rpx6gnn5jggvxvio7tcq3unfgaz43dv34dkdgdtn5uf4jncmmviw3nfe5dekdirttkzz7b/FORECAST2005.pdf . (CIT 2005 Forecast.)

[24] Hearing transcript, p. 59 (Griffith).

[25] Hearing transcript, pp. 78-79 (Griffith and Swinehart).

[26] Hearing transcript, pp. 348 (Holder) and 349-350 (Eich, Rouse and Bergqvist).

[27] Both responding French producers/exporters stated that demand for SPBs has increased since 2000. The principal cause listed was increased demand in industries purchasing and consuming bearings, with *** emphasizing the aerospace industry. *** expected no changes in future demand, and *** commented that future demand hinges on aerospace market development.

Producers and importers were further asked if they anticipated any change in demand for SPBs. Five producers and 13 importers said no, while one producer and five importers answered yes, citing increased movement of U.S. industries to lower cost countries, overall economic conditions, and increased aerospace demand.

Purchasers generally reported increasing or stable demand for SPBs. Twelve purchasers said that demand for SPBs had increased, six said it was unchanged, and three said it had decreased. Those who saw increased demand cited general economic growth (especially in the mining, industrial, and construction sectors); increased demand from the automotive and truck sectors; and increased demand for off-road and agricultural equipment. *** described domestic demand growth as fluctuating with the automotive market while global growth was driven by development in Eastern Europe and Asia. *** also cited both the resurgent U.S. and Japanese economies as well as the growing economies in China and India. However, *** saw demand decreasing as U.S. purchasers moved their production plants overseas, and *** saw high U.S. bearings prices as decreasing demand.

When asked if they anticipated any changes in the demand for SPBs, 16 purchasers said no and five said yes. Whether they anticipated changes or not, most purchasers who elaborated tied their projections to developments in the automotive, truck, and construction markets. *** saw increased vehicle demand in Asia and Eastern Europe driving demand there, while *** predicted that new automotive companies were driving up demand for SPBs. However, *** predicted decreased demand as U.S. manufacturers continue to move their operations overseas.

Substitute Products

Bearings are often designed for a particular and specific use, and often by a particular company to work with its other products as part of a larger machine. Thus, substitution by other products is difficult and could involve a re-design of the final product.

No producers named any substitutes for SPBs.[28] Twelve importers responded that there were no substitutes for SPBs. Only one importer named any substitutes for SPBs, naming BBs and TRBs in automotive hub units. Further questionnaire responses on substitutes underscored how few substitute products exist.[29]

---

[28] French producers/exporters also concurred that there are no substitutes for SPBs. *** noted substitutes are precluded by airworthiness certification regulations; *** explained there is an optimum bearing type for every application and that substituting one type for another would result in a poorer end product. Both maintained there have been no changes in substitutes since January 1, 2000, nor do they anticipate future changes in substitutability.

[29] When asked if changes in the prices of substitutes had affected the prices of SPBs, five producers said no while 11 importers said no and three said yes. When asked if there had been any changes in the number or type of substitutes for SPBs, six producers and 20 importers responded that there had not been, while two importers answered that there had been. When asked if they anticipated any changes in the number or type of substitute products for SPBs, six producers and 20 importers said that they did not.

Eleven purchasers reported that there were no substitutes for SPBs, and *** mentioned that SPBs were being used as substitutes for expensive and scarce TRBs. The rest of the purchasers did not answer the question. When asked if the prices of substitutes had had any effect on the price of SPBs, 15 purchasers answered no. Twenty purchasers had not observed any changes in substitutes, but four had, citing new technology and the substitution of BBs and SPBs by foreign manufacturers. Twenty-two purchasers did not anticipate any changes in substitutes, but two did, citing potential new technological advances.

Cost Share

When purchasers were asked what percentage of the total cost of their own product was accounted for by the cost of SPBs, they almost always answered less than five percent. Thus, SPBs are not a large part of the final cost of many finished goods.

SUBSTITUTABILITY ISSUES

Questionnaire respondents generally described U.S. and subject SPBs as performing many of the same roles at close to the same level. However, some questionnaire respondents did highlight differences between the uses of U.S. and subject SPBs.

Lead Times

Two SPB producers and six SPB importers reported that a majority of their sales were made to order, while three producers and 12 importers indicated that a majority of their sales were from inventory. Sales from inventory generally had lead times of one to fourteen days while made-to-order sales had lead times ranging from one to six months.[30]

U.S. Purchasers

The Commission mailed questionnaires to 119 purchasers of certain bearings.[31] It has received responses from 25 purchasers of SPBs, not including two purchasers who responded that they did not purchase bearings.[32] No SPB purchasers purchased SPBs only, while one also purchased BBs, two also purchased TRBs, and 22 also purchased both BBs and TRBs.[33]

When asked to identify their major competitors, SPB purchasers named a variety of firms across an array of manufacturing industries, including autos, automotive parts, agricultural equipment, and heavy duty trucks. Distributors served industrial customers, including OEMs in the automotive, industrial machinery, and primary metals industries, and repair/aftermarket customers in the service center, repair shop, and heavy duty truck industries.

Purchasers were divided among end users, distributors, and combination end users and distributors. Thirteen described themselves as end users, six as distributors, and five as both. Twelve purchasers said that they competed with their suppliers, while nine said that they did not.

---

[30] Among French producers/exporters, *** reported *** percent of sales from inventory, with a lead time of two months; the balance of sales were produced to order with a lead time of eight months. All *** sales were produced to order, with a lead time of five months.

[31] Questionnaires for all bearings, including ball bearings, spherical plain bearings, and tapered roller bearings, were mailed at the same time. Some firms were on more than one type of bearings list provided by suppliers.

[32] SPB purchasers were asked if related firms imported or produced certain bearings. Thirteen said no related firms, domestic or foreign, imported certain bearings. Six (***) said related firms did import. (While *** answered that no related firms imported bearings, it listed affiliated companies.) Twenty purchasers said no related firms produced bearings, while three (***) indicated they had related firms producing bearings. (While *** did not respond that related firms produce bearings, the Commission received questionnaires from related firms producing bearings.)

[33] Purchasers were asked at several points in the questionnaire if their answers applied to BBs, SPBs, and/or TRBs. If a purchaser did not answer these questions, but did indicate that it had purchased one type of bearing or indicated familiarity with it, that purchaser is counted above as a purchaser of that type of bearing.

Twenty purchasers reported familiarity with U.S. SPBs, five with French SPBs, and 17 with nonsubject country SPBs. The majority of purchasers who answered the question reported familiarity with more than one country's SPBs.

Purchasers were asked to report their purchases of SPBs by year.[34] The largest reporting purchaser's total purchases accounted for less than 16 percent of U.S. consumption in 2005. Comparing 2005 to 2002,[35] overall purchases in terms of value increased 39 percent. U.S. purchases rose, led by major purchasers ***. The only purchaser who reported subject purchases from France was ***, buying *** worth in 2004. Nonsubject purchases were 24 percent of SPB purchases while U.S. SPBs captured the remaining market share in 2005.

Purchasers were also asked if their relative purchases of SPBs from different countries had changed since 2000. Four purchasers responded that they decreased relative U.S. purchases for cost and demand reasons, while five increased relative U.S. purchases, because of localization and sales growth. One purchaser, ***, increased purchases from France. Seven reported an increase in nonsubject country purchases, and one reported a decrease.

Factors Affecting Purchasing Decisions

Available data from purchasers indicate that quality and price are the most important factors that influence purchasing decisions for SPBs.[36] Purchasers were asked to list the top three factors that they consider when choosing a supplier of SPBs. Table SPB-II-1 summarizes responses to this question. Purchasers were also asked to describe the importance of various purchasing factors, as summarized in table SPB-II-2. Price was an important factor for most purchasers.[37] A summary of purchaser comparisons of domestic, subject, and nonsubject SPBs are presented in table SPB-II-3.[38]

---

[34] One firm, ***, reported its purchases by fiscal year and calendar year. To combine this otherwise incomplete data set, the two were combined.

[35] The year 2002 was chosen as representative of activity since the last recession. Nonetheless, not all purchasers reported for all years, so trends in the purchase data may not be indicative of the overall SPB market.

[36] When asked what defines the quality of SPBs, purchasers listed many factors, including meeting specification requirements, life cycle tests, durability test results, material characteristics, industry quality standards, and consistency.

[37] When asked how often they purchase the SPBs offered to them at the lowest price, no purchasers said always, ten said usually, 13 said sometimes, and two said never.

[38] In this table, some purchasers marked one country compared to "all," or something similar, in which case staff used the countries for which purchase data were supplied or familiarity was expressed as comparisons.

Table SPB-II-1
Spherical plain bearings: Ranking of purchasing factors by purchasers

Factor	Number of firms reporting		
	Number 1 factor	Number 2 factor	Number 3 factor
Quality	10	7	1
Price/cost	7	8	5
Availability	2	4	6
Customer requirements	2	0	0
Traditional supplier	1	1	3
Delivery	0	3	6
Technical support/service	0	1	0

Note.–Other factors mentioned were capacity, non-compete contracts, reliability, technology, regulatory approval, and terms of sale. These answers were not included above.

Source: Compiled from data submitted in response to Commission questionnaires.

Table SPB-II-2
Spherical plain bearings: Importance of purchasing factors

Factor	Number of firms reporting		
	Very important	Somewhat important	Not important
Availability	22	2	0
Delivery terms	11	10	3
Delivery time	23	1	0
Discounts	10	11	3
Extension of credit	1	13	10
Price	22	2	0
Minimum quantity requirements	3	17	4
Packaging	5	15	4
Product consistency	21	3	0
Quality meets industry standards	24	0	0
Quality exceeds industry standards	15	6	2
Product range	4	17	3
Reliability of supply	23	1	0
Technical support/service	11	12	1
U.S. transportation costs	7	13	4
Other[1]	1	0	0

[1] *** listed OEM and regulatory approval as other factors.

Source: Compiled from data submitted in response to Commission questionnaires.

Table SPB-II-3
Spherical plain bearings: Number of purchasers' comparisons of U.S.-produced and imported product

Factor	U.S. vs. France[1]			U.S. vs. nonsubject[1]			France vs. nonsubject[1]		
	S	C	I	S	C	I	S	C	I
Availability	0	1	0	3	13	1	0	0	0
Delivery terms	0	1	0	2	14	1	0	0	0
Delivery time	0	1	0	5	10	2	0	0	0
Discounts	0	1	0	0	14	3	0	0	0
Extension of credit	0	1	0	1	13	3	0	0	0
Lower price[2]	1	0	0	1	9	7	0	0	0
Minimum quantity requirements	0	1	0	1	16	0	0	0	0
Packaging	0	1	0	3	13	1	0	0	0
Product consistency	0	1	0	3	13	1	0	0	0
Quality meets industry standards	0	1	0	1	14	2	0	0	0
Quality exceeds industry standards	0	1	0	2	12	3	0	0	0
Product range	1	0	0	3	13	1	0	0	0
Reliability of supply	0	1	0	2	11	4	0	0	0
Technical support/service	1	0	0	1	13	3	0	0	0
U.S. transportation costs	0	1	0	2	14	1	0	0	0
Other[3]	1	0	0	1	0	0	0	0	0

[1] S = first named source superior, C = products comparable, I = first named source inferior.
[2] A rating of superior means that the price is generally lower. For example, if a firm reports "U.S. superior," it means that the price of the U.S. product is generally lower than the price of the imported product.
[3] *** listed OEM and regulatory approval as other factors.

Note.– Nonsubject sources include Canada, China, Czechoslovakia (sic), Germany, Japan, Mexico, and Spain. In comparisons with U.S. product, China and Japan were named by four purchasers, Canada by three, and Mexico by two.

Source: Compiled from data supplied in response to Commission questionnaires.

When asked how often U.S.-produced SPBs meet minimum quality specifications for their or their customers' uses, 13 purchasers said always, five said usually, and one said sometimes. When asked how often subject SPBs meet minimum quality specifications, nine purchasers reported always, eight reported usually, and two reported sometimes. When asked how often nonsubject country SPBs meet minimum quality specifications, 14 purchasers answered always or usually, and one answered sometimes.

Nineteen purchasers reported that they required certification or qualification of their suppliers for 80 percent or more of their purchases. Five purchasers did not require certification, but one of these purchasers qualified its statement by mentioning that it did check for ISO certification. The qualification process can involve reviewing supplier quality, supplier capacity, market acceptance, contract terms,

technical support, financial stability, and adherence to regulations. Twenty-one purchasers reported that no suppliers had failed to receive approval.[39]

Producers and importers were also asked what percent of their sales are to customers that require certification. No clear pattern emerged from the responses; producers' estimates ranged from 46 to 95 percent of their sales being to customers that required certification, while importers' answers ranged from 0 to 100 percent. Firms named a wide variety of industries (across the spectrum of previously named end uses) when asked what type of customers demand certification. When asked if they had ever been unable to qualify any type of SPB, one producer and three importers said yes (with one importer citing an inability to sell to the government) while five producers and 17 importers said no.

Purchasers were asked how often their firm makes purchasing decisions on the basis of the producer of the SPBs involved. Four stated always, eight stated usually, seven stated sometimes, and six stated never. Reasons cited for making decisions based on the SPB producer included reliability, price, quality, and availability.

Purchasers were also asked how often their customers make purchasing decisions on the basis of the producer of the SPBs involved. None reported always, six reported usually, eight reported sometimes, and six reported never. Cited reasons for customers making such decisions included brand recognition, OEM specification, and ABMA standards.

Purchasers were asked how often their firm makes purchasing decisions on the basis of the country of origin of the SPBs involved. None said always, one said usually, 11 said sometimes, and 13 said never. Those who answered other than never cited NAFTA requirements, quality, logistics, and delivery as reasons. Purchasers were also asked how often their customers make purchasing decisions on the basis of the country of origin of the SPBs involved. None said always, none said usually, nine said sometimes, and 13 said never.

When asked if they or their customers ever specifically ordered SPBs from one country over others, 11 purchasers reported that they did not.[40] However, nine purchasers stated that they did, citing loyalty to particular companies or attempts to market certain bearings as U.S.-made.

When purchasers were asked if certain grades or types of SPBs are available only from a single country source, 12 said no and eight said yes.[41] When asked why they had sometimes purchased more expensive SPBs when less expensive SPBs were available, purchasers emphasized quality, service, availability, reliability of delivery, customer preference/application, country of origin/content requirements, and brand recognition.

Comparisons of Domestic Products and Subject Imports

Producers, importers, and purchasers were asked to assess how interchangeable SPBs from the United States were with SPBs from subject and nonsubject countries. Their responses are summarized in table SPB-II-4.

---

[39] *** reported that *** failed to meet quality standards. *** added that Chinese firms *** had failed qualification for reasons of quality.

[40] Separately, when asked if buying product that was produced in the United States was important to their firm, fifteen purchasers answered no and ten answered yes, citing legal requirements, customer requirements, a preference for local sourcing, and other reasons.

[41] Some of those that answered yes specified TRBs, not SPBs, as only available from one country source.

Table SPB-II-4
Spherical plain bearings: U.S. producers', importers', and purchasers' perceived degree of interchangeability of product produced in the United States and in other countries

	Number of firms reporting											
	U.S. producers				U.S. importers				U.S. purchasers			
Country comparison	A	F	S	N	A	F	S	N	A	F	S	N
U.S. vs. France	2	2	1	1	3	4	1	3	2	5	1	1
U.S. vs. nonsubject	2	2	0	0	3	5	0	1	1	3	1	1
France vs. nonsubject	2	1	0	0	2	4	0	1	1	1	0	1

Note: A = Always; F = Frequently; S = Sometimes; N = Never.

Source: Compiled from data submitted in response to Commission questionnaires.

In further comments, *** said that past ITC cases established the interchangeability of U.S. and subject country bearings, and that nothing has changed since those cases. It added that major foreign producers and distributors publish "interchange" charts showing how each company's bearing can substitute for other bearings, including U.S.-made bearings.[42] Producer *** and importers *** stressed the importance of qualification for interchangeability, especially for aerospace bearings. Producer *** and importer *** noted that differences in the metric vs. the English system can impede interchangeability. *** explained that all bearings worldwide, when made to the same international dimensions and standards, were physically the same. However, it added that high-volume, less expensive bearings are rarely made in the United States.[43]

Purchasers offered few comments on SPB interchangeability. *** responded that interchangeability among SPBs was limited because the SPBs that it purchases are designed to satisfy individual applications. *** reported that it requires customized SPBs that are not easily interchangeable because of substantial testing and development. *** said that for *** applications, OEM and regulatory approval were factors that limited interchangeability.

Producers and importers were asked to assess how often differences other than price were significant in sales of SPBs from the United States, subject countries, or nonsubject countries. Their answers are summarized in table SPB-II-5.

[42] Copies of some of these interchange tables were provided with its questionnaire.

[43] Among French producers/exporters, when asked if French and U.S. SPBs are interchangeable, only *** responded, saying yes.

Table SPB-II-5
Spherical plain bearings: U.S. producers' and importers' perceived importance of factors other than price in sales of SPBs produced in the United States and in other countries

Country comparison	Number of firms reporting							
	U.S. producers				U.S. importers			
	A	F	S	N	A	F	S	N
U.S. vs. France	1	2	2	0	0	3	3	4
U.S. vs. nonsubject	1	2	1	0	1	3	3	1
France vs. nonsubject	1	1	1	0	0	1	3	1

Note: A = Always; F = Frequently; S = Sometimes; N = Never.

Source: Compiled from data submitted in response to Commission questionnaires.

In further comments, *** said that its customers rely heavily on its technical expertise. Importer *** added that the quality and technical support of its French supplier were critical factors.

ELASTICITY ESTIMATES

This section discusses elasticity estimates. Parties were encouraged to comment on these estimates. Domestic interested parties agreed with staff's prehearing estimates.[44]

U.S. Supply Elasticity

The domestic supply elasticity for SPBs measures the sensitivity of the quantity supplied by U.S. producers to changes in the U.S. market price of SPBs. The elasticity of domestic supply depends on several factors including the level of excess capacity, the ease with which producers can alter capacity, producers' ability to shift to production of other products, the existence of inventories, and the availability of alternate markets for U.S.-produced SPBs. Analysis of these factors earlier indicates that the U.S. industry is likely to be able to substantially increase or decrease shipments to the U.S. market; an estimate in the range of 3 to 5 is suggested.

U.S. Demand Elasticity

The U.S. demand elasticity for SPBs measures the sensitivity of the overall quantity demanded to a change in the U.S. market price of SPBs. This estimate depends on factors discussed earlier such as the existence, availability, and commercial viability of substitute products, as well as the component share of the SPBs in the production of any downstream products. SPBs are a small but crucial part of the cost of the finished products they are used in, suggesting a highly inelastic demand; a range of -0.2 to -1 is suggested.

[44] Domestic interested parties' prehearing brief, p. 2.

Substitution Elasticity

The elasticity of substitution depends upon the extent of product differentiation between the domestic and imported products.[45] Product differentiation, in turn, depends upon such factors as quality (e.g., chemistry, appearance, etc.) and conditions of sale (availability, sales terms/discounts/promotions, etc.). Most purchasers described U.S. and French SPBs as frequently competing for many SPB end uses. Based on available information, the elasticity of substitution between U.S.-produced SPBs and imported SPBs is likely to be in the range of 3 to 5.

[45] The substitution elasticity measures the responsiveness of the relative U.S. consumption levels of the subject imports and the domestic like products to changes in their relative prices. This reflects how easily purchasers switch from the U.S. product to the subject products (or vice versa) when prices change.

PART III: U.S. PRODUCERS' TRADE AND FINANCIAL DATA

Information in this part of the report is based upon the questionnaire responses of six firms that are believed to account for the majority of SPB production in the United States. The responding SPB producers represented in this section are: Alinabal, Emerson, New Hampshire, RBC, SKF, and Timken.

U.S. PRODUCERS' CAPACITY, PRODUCTION, AND CAPACITY UTILIZATION[1]

Data on capacity, production, and capacity utilization for SPBs are presented in table SPB-III-1.[2] Capacity to produce SPBs decreased irregularly by 7.8 percent between 2000 and 2005, while production fluctuated between 2000 and 2004 and then fell by 14.7 percent from 2004 to 2005. Capacity utilization also fluctuated between 67 and 71 but then fell by 6.2 percentage points from 2004 to 2005. An overall capacity increase by *** for the period was more than offset by capacity lost from the shutdowns of Emerson and SKF. As indicated earlier, one firm (***) accounted for the majority of the value of U.S. shipments in 2005; however, a second firm (***) accounted for the majority of U.S. production.[3] As shown in table SPB-III-1, *** percent of SPBs were produced by *** in 2005 while *** percent were produced by *** and *** percent were produced by ***. SPB production by *** was ***. Alinabal reported an overall decline in its capacity utilization rate from *** percent in 2000 to *** percent in 2005. Despite increasing its capacity, New Hampshire reported a flat capacity utilization figure of *** percent for each period.[4] *** indicated that it did not anticipate any changes in its capacity to produce SPBs in 2006 and 2007.

U.S. PRODUCERS' DOMESTIC SHIPMENTS, COMPANY TRANSFERS, AND EXPORT SHIPMENTS

The value of U.S. producers' U.S. shipments of SPBs and parts thereof increased irregularly by 11.3 percent while the value of export shipments increased on an overall basis by *** percent from 2000 to 2005 (table SPB-III-2). *** reported transferring SPBs to a related firm; such shipments accounted for *** percent of the value of total shipments in 2005. Shipments of SPB parts to unrelated firms were a

[1] The discussion in this section is for complete SPBs only, except as noted.

[2] As shown in table SPB III-1, the basis on which firms reported capacity varied from a high of approximately 3 shifts per day for *** (168 hours per week) to 2 shifts per day for *** (120 hours per week) to a low of 1 shift per day for *** (48 hours and 40 hours per week, respectively).

[3] ***. Producing firms reported the following unit values of U.S. shipments in 2005: ***, ***, ***, ***, and ***. With the exception of ***, unit values reported by the individual firms were relatively stable throughout the period. SPB unit values reported by ***.

[4] ***.

Table SPB-III-1
Spherical plain bearings: U.S. producers' capacity, production, and capacity utilization, by firm, 2000-05[1]

Firm	2000	2001	2002	2003	2004	2005
			Capacity (*1,000 complete bearings*)			
Alinabal	***	***	***	***	***	***
Emerson	***	***	***	***	***	***
New Hampshire	***	***	***	***	***	***
RBC	***	***	***	***	***	***
SKF	***	***	***	***	***	***
Timken	***	***	***	***	***	***
Total	11,159	10,857	10,606	10,689	11,003	10,285
			Production (*1,000 complete bearings*)			
Alinabal	***	***	***	***	***	***
Emerson	***	***	***	***	***	***
New Hampshire	***	***	***	***	***	***
RBC	***	***	***	***	***	***
SKF	***	***	***	***	***	***
Timken	***	***	***	***	***	***
Total	7,519	7,343	7,316	7,240	7,792	6,644
			Capacity utilization (*percent*)			
Alinabal	***	***	***	***	***	***
Emerson	***	***	***	***	***	***
New Hampshire	***	***	***	***	***	***
RBC	***	***	***	***	***	***
SKF	***	***	***	***	***	***
Timken	***	***	***	***	***	***
Average	67.4	67.6	69.0	67.7	70.8	64.6

[1] These data are for complete bearings and exclude parts.

Note.–Firms reported that they based their capacity on the following operational period:
Alinabal.–***.
Emerson.–***.
New Hampshire.–***.
RBC.–***.
SKF.–***.
Timken.–***.

Source: Compiled from data submitted in response to Commission questionnaires.

Table SPB-III-2
Spherical plain bearings: U.S. producers' shipments, by types, 2000-05

Item	2000	2001	2002	2003	2004	2005
Value of complete bearings *(1,000 dollars)*						
Commercial shipments	***	***	***	***	***	***
Internal shipments	***	***	***	***	***	***
Transfers to related firms	***	***	***	***	***	***
U.S. shipments	***	***	***	***	***	***
Export shipments	***	***	***	***	***	***
Total	***	***	***	***	***	***
Value of bearing parts *(1,000 dollars)*						
Commercial shipments	***	***	***	***	***	***
Internal shipments	***	***	***	***	***	***
Transfers to related firms	***	***	***	***	***	***
U.S. shipments	***	***	***	***	***	***
Export shipments	***	***	***	***	***	***
Total	***	***	***	***	***	***
Value of complete bearings and bearing parts *(1,000 dollars)*						
Commercial shipments	***	***	***	***	***	***
Internal shipments	***	***	***	***	***	***
Transfers to related firms	***	***	***	***	***	***
U.S. shipments	102,617	102,893	100,821	98,981	114,428	114,171
Export shipments	***	***	***	***	***	***
Total	***	***	***	***	***	***
Quantity *(1,000 complete bearings)*						
Commercial shipments	***	***	***	***	***	***
Internal shipments	***	***	***	***	***	***
Transfers to related firms	***	***	***	***	***	***
U.S. shipments	7,328	6,846	7,035	6,981	7,320	6,307
Export shipments	***	***	***	***	***	***
Total	***	***	***	***	***	***

Table continued on next page.

Table SPB-III-2--*Continued*
Spherical plain bearings: U.S. producers' shipments, by types, 2000-05

	Unit value *(per complete bearing)*					
Commercial shipments	***	***	***	***	***	***
Internal shipments	***	***	***	***	***	***
Transfers to related firms	***	***	***	***	***	***
U.S. shipments	$13.92	$14.92	$14.24	$14.10	$15.54	$18.01
Export shipments	***	***	***	***	***	***
Average	***	***	***	***	***	***
	Share of total value *(percent)*					
Commercial shipments	***	***	***	***	***	***
Internal shipments	***	***	***	***	***	***
Transfers to related firms	***	***	***	***	***	***
U.S. shipments	***	***	***	***	***	***
Export shipments	***	***	***	***	***	***
Total	100.0	100.0	100.0	100.0	100.0	100.0

[1] Not applicable.

Note.--Values include complete bearings and parts; quantities include only complete bearings; unit values are calculated on the basis of complete bearings only.

Source: Compiled from data submitted in response to Commission questionnaires.

relatively minor portion of the value of total SPB shipments. As shown in the following tabulation, the *** such shipments were by ***:

* * * * * * *

In contrast to the increase in the value of U.S. producers' U.S. shipments (of complete SPBs and parts combined) , the quantity of U.S. producers' U.S. shipments of complete SPBs decreased from 2000 to 2005 by 13.9 percent. The quantity of exports, which accounted for only *** percent of total shipments, remained relatively stable over the period examined.

U.S. PRODUCERS' INVENTORIES

U.S. producers' inventories of SPBs fluctuated within a relatively narrow range throughout the period examined (table SPB-III-3). The ratios of inventories to production and shipments equaled or exceeded *** percent in all periods.

Table SPB-III-3
Spherical plain bearings: U.S. producers' end-of-period inventories, 2000-05[1]

Item	2000	2001	2002	2003	2004	2005
Inventories (*1,000 complete bearings*)	1,878	2,027	1,843	1,834	1,999	1,968
Ratio to production (*percent*)	25.0	27.6	25.2	25.3	25.7	29.6
Ratio to U.S. shipments (*percent*)	25.6	29.6	26.2	26.3	27.3	31.2
Ratio to total shipments (*percent*)	***	***	***	***	***	***

[1] These data are for complete bearings and exclude parts.

Source: Compiled from data submitted in response to Commission questionnaires.

U.S. PRODUCERS' IMPORTS AND PURCHASES

***. The following tabulation presents data on *** imports of nonsubject SPBs, in *1,000 dollars*:

* * * * * * *

Data on U.S. producers' SPB purchases are presented in table SPB-III-4.

Table SPB-III-4
Spherical plain bearings: U.S. producers' purchases, 2000-05

* * * * * * *

U.S. PRODUCERS' EMPLOYMENT, WAGES, AND PRODUCTIVITY

The average number of PRWs producing SPBs and parts increased irregularly by *** percent from 2000 to 2005. The number of hours worked fluctuated upward by *** percent while wages paid increased on an overall basis by *** percent. Hourly wages rose by *** percent from 2000 to 2004 but decreased by *** percent from 2004 to 2005. The fall in hourly wages from $*** in 2004 to $*** in 2005 is due to ***. *** had reported hourly wages of $*** and, as indicated earlier, reported in its questionnaire response that it ***. Productivity fell irregularly by *** percent from 2000 to 2005 while unit labor costs increased by *** percent. Data on employment, wages, and productivity are presented in table SPB-III-5.

Table SPB-III-5
Average number of production and related workers producing SPBs, hours worked, wages paid to such employees, and hourly wages, productivity, and unit labor costs, 2000-05

* * * * * * *

FINANCIAL EXPERIENCE OF U.S. PRODUCERS

Background

Six producers[5] provided useable financial results on their SPB operations. These firms are believed to account for the majority of the domestic industry's production volume in 2005. Based upon shipment data, sales of parts represented *** percent of sales value in every period. *** reported internal consumption, and *** reported transfers to related parties, but since the quantity and value of these affiliated party transactions in total was small (*** to *** percent of sales values in every period), they are not being presented separately from commercial sales.

Emerson ceased production of SPBs in 2001, and SKF ceased domestic production of SPBs in 2004 (it sold SPBs from inventory in 2005); the four other producers operated continuously from 2000 through 2005.

U.S. Producers' SPB Operations

Aggregate income-and-loss data for the domestic producers on their operations producing SPBs are presented in table SPB-III-6. Net sales values increased irregularly by a small amount for 2000 to 2005, decreasing by approximately 11 percent for 2000 to 2003, and then increasing by approximately 15 percent from 2003 to 2005. Operating income followed the same approximate trends, except that the decrease through 2003 (for absolute value) or 2004 (for both unit value and a percentage of net sales value) and the subsequent increases through 2005 were both much more pronounced. Unit sales values and unit operating costs (cost of goods sold and selling, general, and administrative (SG&A) expenses combined) both declined from 2000 to 2003, rose measurably in 2004, and then rose sharply in 2005. In the earlier periods unit sales values declined faster than unit costs, leading to a decrease in profitability; the reverse was true in 2005.

Selected financial data on a company-by-company basis are presented in table SPB-III-7. ***, the ***, were *** period. On the other hand, *** reported *** period except 2005, while *** alternated between profits and losses. The data also highlight the fact that much of the increase in operating profitability in 2005 was related to ***. The company, which reported large losses from 2000 to 2004, reported relatively modest absolute operating profits (but large profit margins) as it ***.[6] The company-by-company data also illustrate the range of SPBs produced and sold by the different producers. From low to high, the unit sales values were $***. Given the large differences between the individual producers' unit sales values and unit costs, it may be more appropriate to view percentage changes in average unit values as opposed to the absolute value of the changes.

Given the wide variation in product mix, a variance analysis is not presented.

---

[5] The producers and their fiscal year ends (if other than December 31) are ***.

[6] The company *** which were in inventory December 31, 2004. *** U.S. producer questionnaire, questions II-2, II-11a, and III-8. Commission staff asked *** about its *** and, especially in view of *** overall profitability, asked if *** had taken any steps to make its U.S. bearing operations ***. *** replied that a *** of its *** is ***." *** also noted that bearings it produces for segments outside of the Commissions reviews ***. E-mail from ***, May 8, 2006.

Table SPB-III-6
Spherical plain bearings: Results of operations of U.S. producers,[1] fiscal years 2000-05

	Fiscal year					
Item	**2000**	**2001**	**2002**	**2003**	**2004**	**2005**
	Quantity (*1,000 bearings or bearing equivalents*)					
Net sales quantities	7,757	7,104	7,382	7,239	7,508	6,619
	Value (*1,000 dollars*)					
Net sales values	120,166	110,211	113,122	107,320	118,975	123,486
Cost of goods sold:						
Raw materials [2 3]	17,783	16,463	16,062	15,556	20,200	18,251
Direct labor [3]	15,877	13,580	13,995	15,254	17,028	15,491
Other factory costs [3]	59,869	55,093	58,958	55,935	60,641	61,952
Total cost of goods sold	93,529	85,136	89,015	86,745	97,869	95,694
Gross profit	26,637	25,075	24,107	20,575	21,106	27,792
SG&A expenses	16,403	15,680	15,448	15,224	15,696	15,955
Operating income	10,234	9,395	8,659	5,351	5,410	11,837
Interest expense	2,690	2,327	2,254	1,139	819	716
All other expense items	289	376	261	216	317	353
CDSOA (Byrd Amendment)	0	1,371	1,734	347	1,030	1,046
All other income items	221	10	6	2	25	1
Other expense/(income), net	2,758	1,322	775	1,006	81	22
Net income/(loss) before taxes	7,476	8,073	7,884	4,345	5,329	11,815
Depreciation/amortization	2,196	2,276	1,984	2,009	2,394	1,263
Cash flow	9,672	10,349	9,868	6,354	7,723	13,078
	Number of firms reporting					
Operating losses	2	1	1	1	1	1
Data	6	6	5	5	5	5

Table continued on next page

Table SPB-III-6--*Continued*
Spherical plain bearings: Results of operations of U.S. producers,[1] fiscal years 2000-05

	Fiscal year					
Item	**2000**	**2001**	**2002**	**2003**	**2004**	**2005**
	Ratio to net sales (*percent*)					
Cost of goods sold:						
Raw materials [2 3]	14.8	14.9	14.2	14.5	17.0	14.8
Direct labor [3]	13.2	12.3	12.4	14.2	14.3	12.5
Other factory costs [3]	49.8	50.0	52.1	52.1	51.0	50.2
Total cost of goods sold	77.8	77.2	78.7	80.8	82.3	77.5
Gross profit	22.2	22.8	21.3	19.2	17.7	22.5
SG&A expenses	13.7	14.2	13.7	14.2	13.2	12.9
Operating income	8.5	8.5	7.7	5.0	4.5	9.6
	Unit value (*dollars per bearing or bearing equivalent*)					
Net sales values	15.49	15.51	15.32	14.83	15.85	18.66
Cost of goods sold:						
Raw materials [2 3]	2.29	2.32	2.18	2.15	2.69	2.76
Direct labor [3]	2.05	1.91	1.90	2.11	2.27	2.34
Other factory costs [3]	7.72	7.76	7.99	7.73	8.08	9.36
Total cost of goods sold	12.06	11.98	12.06	11.98	13.04	14.46
Gross profit	3.43	3.53	3.27	2.84	2.81	4.20
SG&A expenses	2.11	2.21	2.09	2.10	2.09	2.41
Operating income	1.32	1.32	1.17	0.74	0.72	1.79

[1] The producers are Alinabal, Emerson, New Hampshire, RBC, RBC, SKF, and Timken. There are fewer producers reporting data from 2002 onward because Emerson ceased production in 2001.
[2] Raw materials were generally 5 to 8 percent imported and 92 to 95 percent domestic.
[3] RBC,***, only provided total cost of goods sold data (it did not provide data on the separate components). ***.

Source: Compiled from data submitted in response to Commission questionnaires.

Table SPB-III-7
Spherical plain bearings: Selected financial data of U.S. producers on a company-by-company basis, fiscal years 2000-05

	Fiscal year					
Item	**2000**	**2001**	**2002**	**2003**	**2004**	**2005**
	Quantity (*1,000 bearings or bearing equivalents*)					
Sales quantities:						
Alinabal	***	***	***	***	***	***
Emerson	***	***	***	***	***	***
New Hampshire	***	***	***	***	***	***
RBC	***	***	***	***	***	***
SKF	***	***	***	***	***	***
Timken	***	***	***	***	***	***
Total	7,757	7,104	7,382	7,239	7,508	6,619
	Value (*1,000 dollars*)					
Sales value:						
Alinabal	***	***	***	***	***	***
Emerson	***	***	***	***	***	***
New Hampshire	***	***	***	***	***	***
RBC	***	***	***	***	***	***
SKF	***	***	***	***	***	***
Timken	***	***	***	***	***	***
Total	120,166	110,211	113,122	107,320	118,975	123,486
Operating income or (loss):						
Alinabal	***	***	***	***	***	***
Emerson	***	***	***	***	***	***
New Hampshire	***	***	***	***	***	***
RBC	***	***	***	***	***	***
SKF	***	***	***	***	***	***
Timken	***	***	***	***	***	***
Total	10,234	9,395	8,659	5,351	5,410	11,837

Table continued on next page.

Table SPB-III-7--*Continued*
Spherical plain bearings: Selected financial data of U.S. producers on a company-by-company basis, fiscal years 2000-05

	Fiscal year					
Item	**2000**	**2001**	**2002**	**2003**	**2004**	**2005**
	Ratio to net sales (*percent*)					
Operating income or (loss):						
Alinabal	***	***	***	***	***	***
Emerson	***	***	***	***	***	***
New Hampshire	***	***	***	***	***	***
RBC	***	***	***	***	***	***
SKF	***	***	***	***	***	***
Timken	***	***	***	***	***	***
Average	8.5	8.5	7.7	5.0	4.5	9.6
	Unit value (*dollars per bearing or bearing equivalent*)					
Sales value:						
Alinabal	***	***	***	***	***	***
Emerson	***	***	***	***	***	***
New Hampshire	***	***	***	***	***	***
RBC	***	***	***	***	***	***
SKF	***	***	***	***	***	***
Timken	***	***	***	***	***	***
Average	15.49	15.51	15.32	14.83	15.85	18.66
Operating costs:						
Alinabal	***	***	***	***	***	***
Emerson	***	***	***	***	***	***
New Hampshire	***	***	***	***	***	***
RBC	***	***	***	***	***	***
SKF	***	***	***	***	***	***
Timken	***	***	***	***	***	***
Average	14.17	14.19	14.15	14.09	15.13	16.87

[1] Not applicable – producer was not operating this period.

Source: Compiled from data submitted in response to Commission questionnaires.

Capital Expenditures and Research and Development Expenses

Domestic SPB producers' capital expenditures and R&D expenses are presented in table SPB-III-8. The expenditures were dominated by *** ($*** annual expenditures) and *** (large expenditures in 2003 ($***) and 2005 ($***)).

Aggregate R&D expenses were attributable to ***.

Table SPB-III-8
Spherical plain bearings: U.S. producers' capital expenditures and research and development expenses, fiscal years 2000-05

	Fiscal year					
Item	**2000**	**2001**	**2002**	**2003**	**2004**	**2005**
	Value (*$1,000*)					
Capital expenditures:						
Alinabal	***	***	***	***	***	***
Emerson	***	***	***	***	***	***
New Hampshire	***	***	***	***	***	***
RBC	***	***	***	***	***	***
SKF	***	***	***	***	***	***
Timken	***	***	***	***	***	***
Total	6,146	3,296	4,889	7,297	1,060	4,119
Research and development expenditures:						
Alinabal	***	***	***	***	***	***
Emerson	***	***	***	***	***	***
New Hampshire	***	***	***	***	***	***
RBC	***	***	***	***	***	***
SKF	***	***	***	***	***	***
Timken	***	***	***	***	***	***
Total	712	688	621	664	869	599

Source: Compiled from data submitted in response to Commission questionnaires.

Assets and Return on Investment

Data on domestic SPB producers' assets and their return on investment (defined as operating income divided by total assets) are presented in table SPB-III-9. Total asset values declined slowly but steadily. The return on investment mirrored the domestic SPB producers' operating income margins, declining from 2000 to 2004 and then improving in 2005.

Table SPB-III-9
Spherical plain bearings: U.S. producers' value of assets and return on investment, fiscal years 2000-05

	Fiscal year					
Item	**2000**	**2001**	**2002**	**2003**	**2004**	**2005**
	Value (*$1,000*)					
Total assets:						
Current assets:						
Cash and equivalents	***	***	***	***	***	***
Accounts receivable	***	***	***	***	***	***
Inventories	19,662	17,656	19,504	17,750	***	***
Other	***	***	***	***	***	***
Total current assets	30,674	28,614	29,839	29,157	29,968	31,478
Non-current assets:						
Original cost of property, plant, and equipment	66,022	64,332	65,071	63,051	65,324	55,824
Less accumulated depreciation	41,474	42,370	43,813	43,640	48,626	43,180
Equals book value of property, plant, and equipment	24,548	21,962	21,258	19,411	16,698	12,644
Other	12,748	11,560	11,486	12,583	11,681	12,558
Total non-current assets	37,296	33,522	32,744	31,994	28,379	25,202
Total assets	67,970	62,136	62,583	61,151	58,347	56,680
Operating income	5,267	3,011	3,167	1,030	12	4,163
	Ratio of operating income to total assets (*percent*)					
Return on investment	7.7	4.8	5.1	1.7	([1])	7.3

[1] Positive value but less than 0.05 percent.

Note: The above ***.

Source: Compiled from data submitted in response to Commission questionnaires.

PART IV: U.S. IMPORTS AND THE INDUSTRY IN FRANCE

U.S. IMPORTS

Official import statistics on SPBs are presented in table SPB-IV-1. As shown in the notes to table SPB-IV-1, official Commerce statistics for SPBs were adjusted to subtract product that has been excluded from or is not subject to the order. The only adjustment made to U.S. import statistics for SPBs was for *** (*see* tabulation below).

* * * * * * *

Commerce has not excluded any foreign manufacturers/exporters from the antidumping duty order for SPBs from France.

U.S. imports of subject SPBs, in terms of value, fell sharply from 2000 to lower levels in the 2001-03 period and then rose again in 2004 to a point 12.9 percent greater than that reported for 2000 before decreasing again in 2005 (table SPB-IV-1). The value of U.S. imports of SPBs from France in 2005 was 33.0 percent less than that for 2000. In contrast, U.S. imports of SPBs from nonsubject sources rose one and one-half times over the 2000-05 period. Substantial suppliers of SPBs to the United States included China, Germany, Japan, and Mexico; combined imports from these sources accounted for 69.5 percent of U.S. imports in 2005. As discussed earlier, U.S. imports of SPBs from Germany and Japan previously had been subject to antidumping duty orders.[1] The value of U.S. imports from Germany more than quadrupled from 2000 to 2005 while the value of U.S. imports from Japan rose irregularly by 34.7 percent. However, U.S. imports from China and Mexico, in terms of value, also rose sharply from 2000 to 2005 as did imports from all other nonsubject sources. U.S. imports from China increased their share of the total value of imports by 4.1 percentage points from 2000 to 2005 while the share of German imports increased by 14.4 percentage points and the share of imports from Mexico rose by 0.7 percentage point. The share of U.S. imports of SPBs from Japan declined by 9.5 percentage points.

Table SPB-IV-1 also presents quantity data and unit values. Subject unit values are shown in table SPB-IV-1 as declining sharply from $43.84 in 2000 to $3.74 in 2005. This trend differs from that shown in the following tabulation which was compiled from questionnaire data submitted to the Commission.

Item	2000	2001	2002	2003	2004	2005
Unit value (*per complete bearing*)						
France (subject)	$73.73	$55.01	$56.07	$62.89	$60.26	$95.27
All other sources	3.34	6.43	5.27	6.33	5.63	9.42
Average	3.52	6.95	5.82	6.93	6.35	9.93

[1] The orders covering SPBs from Germany and Japan were revoked following the Commission's negative determinations in the first five-year reviews in June 2000.

Table SPB-IV-1
Spherical plain bearings: U.S. imports, by sources, 2000-05

Source	2000	2001	2002	2003	2004	2005
Value *(1,000 dollars)*						
France (subject)	1,562	659	476	545	1,764	1,046
China	2,836	2,967	3,204	4,293	4,950	9,136
Germany	3,070	2,128	3,628	4,429	10,654	15,160
Japan	4,341	3,742	4,560	4,931	6,040	5,846
Mexico	2,287	1,276	428	215	431	6,010
All others	6,848	6,055	6,800	8,601	12,908	14,836
Subtotal (nonsubject)	19,383	16,169	18,620	22,469	34,983	50,988
Total	20,945	16,828	19,097	23,014	36,747	52,034
Quantity *(1,000 bearings)*						
France (subject)	36	35	69	31	413	280
China	1,642	2,286	2,292	3,105	4,800	9,940
Germany	507	210	382	1,156	3,912	2,727
Japan	2,930	1,790	1,613	2,987	2,748	13,015
Mexico	1,419	1,097	82	63	51	713
All others	590	578	489	3,316	5,629	4,148
Subtotal (nonsubject)	7,089	5,961	4,859	10,627	17,140	30,543
Total	7,124	5,996	4,928	10,658	17,553	30,823
Unit value *(per bearing)*						
France (subject)	$43.84	$18.88	$6.91	$17.70	$4.27	$3.74
China	1.73	1.30	1.40	1.38	1.03	0.92
Germany	6.06	10.12	9.49	3.83	2.72	5.56
Japan	1.48	2.09	2.83	1.65	2.20	0.45
Mexico	1.61	1.16	5.19	3.42	8.38	8.43
All others	11.61	10.48	13.90	2.59	2.29	3.58
Average (nonsubject)	2.73	2.71	3.83	2.11	2.04	1.67
Average	2.94	2.83	3.90	2.16	2.09	1.69

Table continued on next page.

Table SPB-IV-1--*Continued*
Spherical plain bearings: U.S. imports, by sources, 2000-05

Source	2000	2001	2002	2003	2004	2005
			Share of value *(percent)*			
France (subject)	7.5	3.9	2.5	2.4	4.8	2.0
China	13.5	17.6	16.8	18.7	13.5	17.6
Germany	14.7	12.6	19.0	19.2	29.0	29.1
Japan	20.7	22.2	23.9	21.4	16.4	11.2
Mexico	10.9	7.6	2.2	0.9	1.2	11.6
All others	32.7	36.0	35.6	37.4	35.1	28.5
Subtotal (nonsubject)	92.5	96.1	97.5	97.6	95.2	98.0
Total	100.0	100.0	100.0	100.0	100.0	100
			Share of quantity *(percent)*			
France (subject)	0.5	0.6	1.4	0.3	2.4	0.9
China	23.1	38.1	46.5	29.1	27.3	32.2
Germany	7.1	3.5	7.8	10.8	22.3	8.8
Japan	41.1	29.9	32.7	28.0	15.7	42.2
Mexico	19.9	18.3	1.7	0.6	0.3	2.3
All others	8.3	9.6	9.9	31.1	32.1	13.5
Subtotal (nonsubject)	99.5	99.4	98.6	99.7	97.6	99.1
Total	100.0	100.0	100.0	100.0	100.0	100.0

Note–Data are based on imports entered under HTS items 8483.30.8055 (rod end bearings with housing), 8483.30.8065 (plain shaft bearings with housing other than rod end bearings), and 8483.30.8070 (spherical plain shaft bearings without housing). Each of these HTS items includes both value and quantity data (which are believed to measure complete bearings). Import data do not include any subject product (including SPB parts) entered under additional numbers. (*** reported importing *** parts of SPBs from France in their questionnaire response.) Official Commerce statistics were adjusted to subtract product from the above-listed items that has been excluded from or is not subject to the order. Values are landed, duty-paid.

Source: Compiled from official Commerce statistics.

U.S. IMPORTERS' INVENTORIES

U.S. importers' inventories of SPBs from France and from all other sources are presented in table SPB-IV-2.

Table SPB-IV-2
Spherical plain bearings: U.S. importers' end-of-period inventories of imports, by sources, 2000-05[1]

Source	2000	2001	2002	2003	2004	2005
Imports from France:						
Inventories (*1,000 complete bearings*)	***	***	***	***	***	***
Ratio to imports (*percent*)	***	***	***	***	***	***
Ratio to U.S. shipments of imports (*percent*)	***	***	***	***	***	***
Imports from all other sources:						
Inventories (*1,000 complete bearings*)	***	***	***	***	***	***
Ratio to imports (*percent*)	***	***	***	***	***	***
Ratio to U.S. shipments of imports (*percent*)	***	***	***	***	***	***
Imports from all sources:						
Inventories (*1,000 complete bearings*)	241	240	207	220	250	336
Ratio to imports (*percent*)	8.6	34.3	21.4	26.0	19.8	19.5
Ratio to U.S. shipments of imports (*percent*)	8.6	33.4	20.8	26.4	20.4	20.5

[1] These data are for complete bearings and exclude parts.

Source: Compiled from data submitted in response to Commission questionnaires.

THE INDUSTRY IN FRANCE

As shown in overview table 4, only one firm (SKF Aerospace France) provided data on its manufacturing operations for SPBs in France.[2] (Schaeffler provided a response, dated May 4, 2006, for its "***" of SPBs in France that appeared to indicate that ***.)[3] Data for SKF Aerospace France are presented in table SPB-IV-3. Exports of SPBs manufactured by SKF Aerospace to the United States

[2] Likewise, only "SKF-France" or SARMA responded during the first five-year reviews. Confidential staff report INV-X-101 (May 8, 2000), p. SPB-IV-5. ***, which exports SPBs to the United States that are manufactured by ***, and ***, which exports product manufactured by ***, also provided responses to the questionnaire in these five-year reviews. The following tabulation provides the value of SPB exports to the United States by exporters:

* * * * * * *

***.

[3] *See* telephone message to counsel for Schaeffler, dated May 11, 2006, and e-mails, dated May 22, 2006 and June 6, 2006.

(including that exported directly by SKF Aerospace France and by ***) accounted for slightly more than *** of the value of U.S. imports of SPBs from France (*compare* export data in table SPB-IV-3 and ***'s foreign producer/exporter questionnaire response to data in table SPB-IV-1). Responding U.S. importers indicated that their imports of SPBs from France were manufactured by the following firms: *** ***.[4] ***, another U.S. importer, reported importing French-manufactured SPBs from multiple manufacturers (including ***) while *** reported sourcing its U.S. subject imports from ***. SKF Aerospace estimated in its questionnaire response that it accounted for *** percent of the production of SPBs in France in 2005. INA France (which is incorporated into the Schaeffler Group) is believed to produce SPBs in France but has provided an incomplete response to the foreign producer/exporter questionnaire.[5] Another possible producer, SNR, was identified during the first five-year reviews[6] but ***.[7]

Table SPB-IV-3
Spherical plain bearings: Data for the only reporting producer in France (SKF Aerospace France), 2000-05

* * * * * * *

SKF Aerospace's reported capacity to produce SPBs was constant throughout the period reviewed (table SPB-IV-3). Its production of SPBs, in contrast, fluctuated with the result that capacity utilization ranged from a low of *** percent in 2004 to a high of *** percent in 2001. SFK Aerospace reported capacity utilization of *** percent in 2005. The home market was the *** destination for SPB shipments by the firm although, as noted earlier, a portion of its home market shipments are subsequently exported to the United States by ***. SKF Aerospace reported that it ***. It further reported that it ***. There were no reported tariffs or non-tariff barriers to trade on SKF Aerospace's exports of SPBs in any countries other than the United States nor are the firm's exports subject to current investigations in any countries other than the United States that might result in tariff or non-tariff barriers to trade.

THE GLOBAL SPB MARKET

Global demand for all bearings is forecasted by the Freedonia Group to grow by 5.7 percent annually through 2007 to $36 billion, spurred by rising output of bearing-consuming products, especially in developing regions. North America and Western Europe, however, will remain the world's leading markets for these products. The United States and Japan are the world's largest producing countries, with over $10 billion in bearing shipments.[8] According to respondents, there are no major barriers to the importation of SPBs into countries other than the United States.[9]

---

[4] Additional U.S. importers, specifically ***, did not provide information on the identity of the foreign manufacturers of their U.S. imports of SPBs from France. ***.

[5] Letter from counsel for Schaeffler, May 4, 2006.

[6] Confidential staff report INV-X-101 (May 8, 2000), p. SPB-IV-5.

[7] ***. Further, *** but ***. In addition, Timken France SAS, a bearing manufacturer in France related to an interested party, does not produce SPBs. E-mail from counsel for Timken, December 19, 2005.

[8] World Bearings, study brochure, Freedonia Group, June 2003, at http://www.freedoniagroup.com, retrieved Mar. 13, 2006.

[9] SKF's response to the notice of institution, p. 8.

Worldwide demand for SPBs likely does not exceed $2.7 billion, as reflected in global trade statistics (tables SPB-IV-4 and SPB-IV-5).[10] Germany was the leading SPB export source in 2004, accounting for 24 percent of total reported exports, followed by Japan and the United States, with 17 percent and 10 percent, respectively. France was the ninth largest export source, with 4 percent of worldwide exports of SPBs in 2004. The United States was the leading SPB import market in 2004, with 15 percent ($401 million). Germany and Mexico were the second and third ranked import markets, with a combined 17 percent ($448 million) of reported SPB imports. French exports of plain shaft bearings, the value of which nearly doubled during 2000-05, were largely destined for European markets. The United States emerged as France's fifth largest export market in 2005 as such exports increased more than four-fold during the period of review (table SPB IV-6).[11]

Table SPB-IV-4
Spherical plain bearings: Global exports, by reporting country, 2000-04

Reporting country	2000	2001	2002	2003	2004
	Value ($1,000)				
Germany	389,975	429,189	445,311	518,779	630,638
Japan	364,091	349,577	366,466	388,292	460,643
USA	219,579	205,966	197,811	211,515	265,464
China	49,326	54,835	60,068	94,710	145,615
Belgium	113,269	95,971	100,476	121,520	140,470
Italy	58,538	60,802	69,779	88,229	124,132
Austria	82,625	79,868	77,526	90,142	116,132
United Kingdom	87,841	85,153	84,507	84,019	105,421
France	65,239	68,513	65,144	77,110	102,459
Brazil	44,884	41,988	44,691	52,559	72,578
All other	305,149	331,007	331,824	382,580	489,997
Reporting total	1,780,516	1,802,869	1,843,603	2,109,455	2,653,549

Note.–These data represent exports for HTS heading 8483.30 (bearing housings and spherical plain bearings), which are not directly comparable to the SPB imports subject to the scope of this review.

Source: Data from Eurostat, U.S. Bureau of the Census, Brazil's Secretariat of Foreign Trade, China Customs, Japan Customs, and the United Nations, as presented by Global Trade Atlas.

[10] Reporting countries collect import/export data for tapered roller bearings using different quantity measures (tons vs. units), precluding the development of comparable quantity and unit value data.

[11] France's export data are presented for a longer reporting period than global data, reflecting the latest official statistics provided.

Table SPB-IV-5
Spherical plain bearings: Global imports, by reporting country, 2000-04

Reporting country	2000	2001	2002	2003	2004
	Value ($1,000)				
USA	279,978	265,181	293,974	304,749	400,990
Germany	150,625	155,706	159,463	211,271	254,326
Mexico	128,464	124,682	152,809	157,810	193,875
China	41,511	54,035	99,556	104,433	139,843
France	80,355	81,724	90,202	109,516	138,796
Belgium	100,324	88,833	100,199	111,678	138,512
Italy	79,979	72,334	81,000	93,170	108,790
Canada	71,213	68,316	67,118	74,760	91,868
Hungary	35,824	41,824	42,805	57,290	81,330
Austria	44,027	51,024	46,834	60,638	73,808
All other	701,166	739,726	752,097	879,196	1,031,935
Reporting total	1,713,466	1,743,385	1,886,057	2,164,511	2,654,073

Note.–These data represent imports for HTS heading 8483.30 (bearing housings and spherical plain bearings), which are not inclusive of the certain BB imports subject to the scope of this review.

Source: Data from Eurostat, U.S. Bureau of the Census, Mexico's Secretary of Economy, China Customs, Statistics Canada, and the United Nations, as presented by Global Trade Atlas.

Table SPB-IV-6
Spherical plain bearings: French exports, by partner country, 2000-05

Partner country	2000	2001	2002	2003	2004	2005
	Value ($1,000)					
Germany	15,144	14,758	13,757	17,377	21,424	21,396
Italy	8,781	9,272	9,206	9,392	8,419	13,086
Spain	6,564	6,390	6,081	9,415	14,273	13,040
Belgium	5,907	5,097	6,529	9,491	12,024	11,272
United States	2,157	1,204	2,529	2,034	3,441	9,742
United Kingdom	6,430	7,369	6,074	7,105	8,107	7,121
Japan	17	125	191	1,630	5,229	3,954
Netherlands	619	520	480	596	1,571	2,780
Sweden	2,497	3,508	1,910	1,815	2,797	2,197
Taiwan	2	0	0	47	0	2,098
All other	7,595	10,411	7,591	10,039	13,503	14,894
World	55,713	58,654	54,348	68,941	90,788	101,580

Note.–These data represent exports for HTS heading 8483.30.90 (plain shaft bearings for machinery, excluding those for civil aircraft of subheading 8483.30.10), which are not directly comparable to the SPB imports subject to the scope of this review.

Source: Data from Eurostat, as presented by Global Trade Atlas.

PART V: PRICING AND RELATED INFORMATION

FACTORS AFFECTING PRICES

Raw Material Costs

The principal raw material in SPBs is bearing quality steel bar. Using merchant steel bar as a proxy for bearing quality steel,[1] the price of merchant steel bar rose from $*** per ton in January 2000 to $*** per ton in December 2005. As recently as September 2003, the price for merchant steel bar was still $*** per ton, with the increase having come since then.

Producers and importers were asked to what extent changes in the prices of raw material costs had affected the prices for their sales of SPBs. Five producers and 13 importers described increased raw material prices, while one producer and three importers reported no changes in raw material costs. Most suppliers who reported an increase in raw material costs indicated that the increase had come since 2002 or 2003, with raw material costs having been stable before then. These increased costs (steel, and to a lesser extent energy) were also described as being a worldwide phenomenon, with similar worldwide effects. Several suppliers commented that raw material costs had stabilized in the last year, and that they expected such costs to remain stable in the future.

Moreover, those producers and importers who did report increased raw material prices reported a variety of effects. Some reported that they could pass these costs through to customers (either in the form of surcharges or raised prices), while others stated that they could not, especially with larger OEM customers. For example, *** indicated that it had assessed a surcharge to cover raw material costs. That surcharge had been mostly accepted by its industrial consumers, but some automotive purchasers had threatened to move production offshore if forced to purchase at higher prices. It added that it was currently trying to convert its surcharges to higher list prices.[2]

More information on the effects of raw material costs on the U.S. industry is available in part III of this chapter.

Transportation Costs to the U.S. Market

Transportation costs for SPBs from France to the United States (excluding U.S. inland costs) are estimated to be 2.4 percent of the total cost for SPBs.[3]

---

[1] Pricing data for bearing quality steel bar are not available. Merchant steel bar is manufactured on equipment similar to that used to produce bearing quality steel bar, albeit with different chemistry. Data are from ***.

[2] French producers/exporters indicated that raw material costs have not yet had a significant effect on selling prices, though *** predicted future prices will reflect a cost surge in the latter half of 2005. *** did not report any changes in supply factors since January 1, 2000.

[3] These estimates are derived from official Commerce statistics and represent the transportation and other charges on imports valued on a c.i.f. basis, as compared with customs value.

U.S. Inland Transportation Costs

Producers and importers[4] generally estimated that transportation costs were one to five percent of the total delivered cost of their SPBs. Two producers and 13 importers said that their firm arranges transportation, while two producers and five importers said that their purchasers do.[5] Both producers and importers generally shipped a majority of their shipments at least 100 miles within the United States.

U.S. Price Levels

According to data from the BLS, the producer price index for intermediate goods rose 26.1 percent from January-March 2000 to October-December 2005 while the producer price index for iron and steel products rose 44.9 percent over the same period.[6]

Exchange Rates

The nominal and real values of the euro are presented in appendix F, figure F-2, with the French producer price index used for the real index. From 2000-02, the nominal and real exchange rate initially declined, but both showed increases in the years 2002-05.

PRICING PRACTICES

Pricing Methods

SPB suppliers use price lists, transaction-by-transaction negotiations, and long-term contracts when negotiating prices for SPBs. Many suppliers reported that prices for OEMs are negotiated individually while distributors purchase off price lists.[7] Price lists may also be used as a starting point for negotiations. For larger customers, suppliers reported using long-term contracts for the particular programs for which the purchaser is purchasing SPBs.[8] For larger OEMs, prices will usually be negotiated lower than those for distributors.[9]

Suppliers described a wide variety of sales terms for their sales of SPBs. One producer and three importers reported that over 50 percent of their SPB sales were under long-term (more than one year) contracts,[10] one producer and four importers reported that over 50 percent of their SPB sales were under

---

[4] The following firms submitted both an importer's and a producer's questionnaire: ***. For the purposes of this section, (except as regards presentation of pricing data), the responses of these firms have been counted both as a producer and as an importer. In almost all cases, the answers to the producer's and importer's questionnaires were substantially similar or identical as the firm referred to the other questionnaire.

[5] *** reported that both it and its purchasers may arrange transportation.

[6] The producer price indexes for each quarter was constructed by taking an average of the seasonally adjusted price index for each month of the quarter.

[7] Many examples of price lists were provided to the Commission as part of producer and importer questionnaire responses. Most were quite extensive with a long list of a variety of bearings products.

[8] Few suppliers reported regularly using discounts, although quantity, early payment, and distributor loyalty discounts were noted. For longer term contracts, discounts are more likely built in to the negotiated price. *** remarked that customers may seek discounts even after sales have been negotiated under contract.

[9] Hearing transcript, pp. 120 (Swinehart) and 123-124 (Griffith).

[10] Long-term contracts were generally 1-5 years, often did not allow price renegotiation, did not always fix quantity, and typically did not have a meet-or-release provision. However, *** reported that customers may try to

(continued...)

short-term (one year or less) contracts,[11] two producers and nine importers reported over 50 percent of their SPB sales were spot sales, and one producer (***) reported that its sales were more equally divided between long-term contracts, short-term contracts, and spot sales. Among French producers/exporters, most 2005 sales to U.S. customers were spot sales, with none on short-term contracts. *** reported 34 percent of sales through long-term contracts (duration of up to 10 years), fixing quantity and price with an escalation formula but without a meet-or-release provision.

When asked how frequently they purchase certain bearings, 11 SPB purchasers answered daily, nine answered weekly, and four answered monthly. Twenty-four SPB purchasers did not expect this pattern to change in the next two years.

SPB purchasers typically contact between one and five suppliers before purchasing. When asked if purchases typically involve negotiations (and if so, if these negotiations involve quoting competing prices), 21 SPB purchasers responded that their purchases did typically involve negotiations, while four said that they did not. However, few if any purchasers reported discussing competitors' prices. Negotiations typically involved price, design, quantity ordered, long-term agreements, and/or materials availability, among other factors.

Twenty SPB purchasers reported that they did not vary their purchases of SPBs from a particular supplier based on the price offered by that supplier, but five did. However, one of those who did, ***, explained that it would prefer a long-term (approximately three year) supply agreement with a close working relationship.

When asked if they had changed suppliers in the last five years, 16 SPB purchasers answered no while nine answered yes. Those who had changed suppliers cited availability (supplier capacity) and price, but several, including ***, stated that changing suppliers is an infrequent occurrence for them because of qualification issues.

Purchasers were asked if they were aware of any new suppliers in the market in the last five years. Twenty SPB purchasers said no, but five said yes, citing various suppliers from North America, Europe, China, and Japan. When asked if they anticipated any new suppliers in the future, 16 SPB purchasers said no and nine said yes, often citing Chinese and Indian suppliers.

Purchasers were asked to identify price leaders and describe how these leaders led. Fifteen SPB purchasers named Timken as a price leader, six named SKF, and four named NTN, with NSK and INA also receiving multiple mentions. Purchasers reported that leaders led by providing a quality product and having a large market share. According to some purchasers, these qualities have allowed the price leaders to increase prices annually.[12]

Producers and importers were also asked if any individual firms had influenced the price of SPBs in the U.S. market. Five producers and seven importers said yes, generally citing Chinese imports (sometimes through the importing company, such as ***) and the large multinational bearings producers, with importers being more likely than producers to cite Timken. However, one producer and 11 importers answered that no firm had influenced price.

When asked how frequently the price of certain bearings changes, 17 SPB purchasers responded with answers between six months and one year. Other purchasers reported longer periods when under contracts. Some purchasers reported that price changes depend on energy and raw material costs. *** reported that price changes are coming more frequently now than in 2003 and before. *** similarly

---

[10] (...continued)
renegotiate price.

[11] Short-term contracts were generally 6-12 months, generally did not allow price renegotiation, fixed either price or both price and quantity, and usually did not have a meet-or-release provision.

[12] *** reported that *** threatened to stop shipping product in order to obtain price increases. When those firms succeeded in obtaining price increases, their competitors followed with price increases.

reported that prices were typically held for the life of a program, but have changed significantly in recent years due to higher steel pricing.

Price Trends

Purchasers were asked if there had been a change in the price of SPBs since January 1, 2000, and if so, how the price of U.S.-produced SPBs has changed relative to imported SPBs. Ten SPB purchasers said that prices of U.S. and imported SPBs had changed by the same amount, with one citing "steel economics." Two said that the prices of U.S. SPBs had changed relative to the price of French SPBs. Four purchasers said that the prices of U.S. SPBs had changed relative to the price of SPBs from nonsubject countries. In response to a separate question, three said that U.S. SPB prices were higher than French SPB prices (with one saying U.S. and French prices were the same) while 12 said that U.S. prices were higher than nonsubject country SPB prices, and one said that U.S. prices were lower. Three purchasers said that the price of SPBs had not changed.

Producers and importers were asked to compare the prices of SPBs in the U.S. and non-U.S. markets. While most answered that such comparisons were difficult, those that could compare generally described U.S. prices as higher, although importer *** described international prices as the same as U.S. prices.

PRICE DATA

The Commission requested U.S. producers and importers of SPBs to provide quarterly data for the total quantity and value of SPBs that were shipped to unrelated customers in the U.S. market. Data were requested for the period January 2000-December 2005. The products for which pricing data were requested are as follows:[13]

Product 21: SA1-17B–Lubrication type spherical plain bearing with high carbon chromium bearing steel for both outer and inner rings. With lubrication hole and groove. One-piece outer ring with fractured split. Additional coating. 17 mm bore, 30 mm OD, 14 mm width.

Product 22: W2012–Lubrication type spherical plain bearing with high carbon chromium bearing steel for both outer and inner rings. With lubrication hole and groove. One-piece outer ring with fractured split. Additional coating. 100 mm bore, 190 mm OD, 105 mm width.

Product 23: 15SF24–Spherical plain bearing with single fracture. 1.5 inch bore, 2.4375 inch OD, 1.312 inch width.

Product 24: B10L–Spherical plain bearing, radial type, open. 0.6250 inch bore, 1.0625 inch OD, 0.547 inch width

Two U.S. producers (***) and one importer (***) provided usable[14] pricing data for sales of the requested products, although not all firms reported pricing for all products for all quarters. Pricing data

[13] These products are the same as the products in the first five-year reviews.

[14] *** data are substantially different in level than *** data for the same product (***).

reported by these firms accounted for 0.8 percent of U.S. producers' shipments of SPBs[15] and no U.S. shipments of subject imports from France in 2005.

Price data are presented in tables SPB-V-1 to SPB-V-3 and in figures SPB-V-1 to SPB-V-6. Prices were requested separately for shipments to distributors and OEMs. The data usually showed substantial differences between distributor and OEM price levels, and thus are presented separately.[16]

Price Trends

Prices generally rose for the SPB pricing products for which data were collected. For sales to distributors, prices of U.S. product 21 rose *** percent, prices of U.S. product 23 rose *** percent, and prices of product 24 rose *** percent over October-December 2000 to October to December 2005. For sales to end users, prices of U.S. product 23 rose *** percent and prices of product 24 rose *** percent.

Price Comparisons

Price comparisons are not available because French importers did not submit comparable pricing data for any SPB pricing product. ***[17] ***.

Table SPB-V-1
Spherical plain bearings: Weighted-average f.o.b. prices and quantities as reported by U.S. producers and importers of product 21, with margins of underselling/(overselling) for sales prices, by quarters, January 2000-December 2005

* * * * * * *

Table SPB-V-2
Spherical plain bearings: Weighted-average f.o.b. prices and quantities as reported by U.S. producers and importers of product 23, with margins of underselling/(overselling) for sales prices, by quarters, January 2000-December 2005

* * * * * * *

Table SPB-V-3
Spherical plain bearings: Weighted-average f.o.b. prices and quantities as reported by U.S. producers and importers of product 24, with margins of underselling/(overselling) for sales prices, by quarters, January 2000-December 2005

* * * * * * *

---

[15] Pricing data were a slightly higher 0.9 percent of U.S. producers' shipments of SPBs in 2004. In the first five-year reviews, pricing data were 1.2 percent of U.S. producers' shipments of SPBs. Catalogues and price lists submitted with some questionnaires indicate that there are a wide variety of SPBs, so high coverage of all shipments may not be possible with a limited number of products. By value, the pricing data represent 0.5 percent of U.S. shipments of U.S. product in 2005.

[16] In general, prices supplied by individual producers or importers were in the same range with prices supplied by other producers or importers. However, this was not always the case. In some products, different prices by different producers or importers result in brief and large moves up or down that are due to one producer or importer not supplying data in that quarter, and the price thus reflects only the other producers' or importers' prices.

[17] ***.

Figure SPB-V-1
Spherical plain bearings: Weighted-average prices for sales to distributors, as reported by U.S. producers and importers of product 21, by quarters, January 2000-December 2005

* * * * * * *

Figure SPB-V-2
Spherical plain bearings: Weighted-average prices for sales to end users, as reported by U.S. producers of product 21, by quarters, January 2000-December 2005

* * * * * * *

Figure SPB-V-3
Spherical plain bearings: Weighted-average prices for sales to distributors, as reported by U.S. producers and importers of product 23, by quarters, January 2000-December 2005

* * * * * * *

Figure SPB-V-4
Spherical plain bearings: Weighted-average prices for sales to end users, as reported by U.S. producers and importers of product 23, by quarters, January 2000-December 2005

* * * * * * *

Figure SPB-V-5
Spherical plain bearings: Weighted-average prices for sales to distributors, as reported by U.S. producers and importers of product 24, by quarters, January 2000-December 2005

* * * * * * *

Figure SPB-V-6
Spherical plain bearings: Weighted-average prices for sales to end users, as reported by U.S. producers and importers of product 24, by quarters, January 2000-December 2005

* * * * * * *

APPENDIX A

FEDERAL REGISTER NOTICES AND ADEQUACY STATEMENT

INTERNATIONAL TRADE COMMISSION

[Invs. Nos. 731–TA–344, 391A, 392A, 392C, 393A, 394A, 396, and 399A (Second Review)]

Certain Bearings From China, France, Germany, Italy, Japan, Singapore, and the United Kingdom

AGENCY: United States International Trade Commission.

ACTION: Institution of five-year reviews concerning the antidumping duty orders on certain bearings from China, France, Germany, Italy, Japan, Singapore, and the United Kingdom.

SUMMARY: The Commission hereby gives notice that it has instituted reviews pursuant to section 751(c) of the Tariff Act of 1930 (19 U.S.C. 1675(c)) (the Act) to determine whether revocation of the antidumping duty orders on certain bearings from China, France, Germany, Italy, Japan, Singapore, and the United Kingdom would be likely to lead to continuation or recurrence of material injury. Pursuant to section 751(c)(2) of the Act, interested parties are requested to respond to this notice by submitting the information specified below to the Commission;[1] to be assured of consideration, the deadline for responses is July 21, 2005. Comments on the adequacy of responses may be filed with the Commission by August 16, 2005. For further information concerning the conduct of these reviews and rules of general application, consult the Commission's Rules of Practice and Procedure, part 201, subparts A through E (19 CFR part 201), and part 207, subparts A, D, E, and F (19 CFR part 207).

EFFECTIVE DATE: June 1, 2005.

FOR FURTHER INFORMATION CONTACT: Mary Messer (202–205–3193), Office of Investigations, U.S. International Trade Commission, 500 E Street SW., Washington, DC 20436. Hearing-impaired persons can obtain information on this matter by contacting the Commission's TDD terminal on 202–205–1810. Persons with mobility impairments who will need special assistance in gaining access to the Commission should contact the Office of the Secretary at 202–205–2000. General information concerning the Commission may also be obtained by accessing its internet server (*http://www.usitc.gov*). The public record for these reviews may be viewed on the Commission's electronic docket (EDIS) at *http://edis.usitc.gov.*

SUPPLEMENTARY INFORMATION:

Background. On the dates listed below, antidumping duty orders were issued on the subject imports:

Order date	Product/country	Inv. No.	FR cite
6/15/87	Tapered roller bearings/China	731–TA–344	52 FR 22667
5/15/89	Ball bearings/Germany	731–TA–391A	54 FR 20900
5/15/89	Ball bearings/France	731–TA–392A	54 FR 20902
5/15/89	Spherical plain bearings/France	731–TA–392C	54 FR 20902
5/15/89	Ball bearings/Italy	731–TA–393A	54 FR 20903
5/15/89	Ball bearings/Japan	731–TA–394A	54 FR 20904
5/15/89	Ball bearings/Singapore	731–TA–396	54 FR 20907
5/15/89	Ball bearings/United Kingdom	731–TA–399A	54 FR 20910

Following five-year reviews by Commerce and the Commission, effective July 11, 2000, Commerce issued a continuation of the antidumping duty orders on imports of certain bearings from China, France, Germany, Italy, Japan, Singapore, and the United Kingdom (65 FR 42665). The Commission is now conducting second reviews to determine whether revocation of the orders would be likely to lead to continuation or recurrence of material injury to the domestic industry within a reasonably foreseeable time. It will assess the adequacy of interested party responses to this notice of institution to determine whether to conduct full reviews or expedited reviews. The Commission's determinations in any expedited reviews will be based on the facts available, which may include information provided in response to this notice.

Definitions. The following definitions apply to these reviews:

(1) *Subject Merchandise* is the class or kind of merchandise that is within the scope of the five-year reviews, as defined by the Department of Commerce.

(2) The *Subject Countries* in these reviews are China, France, Germany, Italy, Japan, Singapore, and the United Kingdom.

(3) The *Domestic Like Product* is the domestically produced product or products which are like, or in the absence of like, most similar in characteristics and uses with, the *Subject Merchandise.* In its original determination concerning tapered roller bearings from China (Inv. No. 731–TA–344), the Commission found one *Domestic Like Product:* Tapered roller bearings and parts thereof—finished or unfinished; flange, take-up cartridge, and hanger units incorporating tapered roller bearings, and tapered roller housings (except pillow blocks) incorporating tapered rollers, with or without spindles, and whether or not for automotive use. In its original determinations concerning antifriction bearings (other than tapered roller bearings) and parts thereof from France, Germany, Italy, Japan, Singapore, and the United Kingdom (Investigations Nos. 731–TA–391–394, 396, and 399), the Commission made affirmative determinations with respect to each of the following three *Domestic Like Products:* (1) Ball bearings, (2) cylindrical roller bearings, and (3) spherical plain bearings. One Commissioner defined the *Domestic Like Product* differently. In its full five-year review determinations, the Commission made affirmative determinations with respect to each of the following three *Domestic Like Products,* consistent with Commerce's scope definitions: (1) Ball bearings, (2) spherical plain bearings, and (3) tapered roller bearings. For purposes of this notice, you should report information separately on each of the following three *Domestic Like Products:* (1) Ball bearings, (2) spherical plain bearings, and (3) tapered roller bearings.

(4) The *Domestic Industry* is the U.S. producers as a whole of the *Domestic Like Product,* or those producers whose collective output of the *Domestic Like Product* constitutes a major proportion of the total domestic production of the product. In its original determination concerning tapered roller bearings from China (Inv. No. 731–TA–344), the Commission found one *Domestic Industry* devoted to the production of the *Domestic Like Product,* as defined above. In its original determinations concerning antifriction bearings (other than tapered roller bearings) and parts

[1] No response to this request for information is required if a currently valid Office of Management and Budget (OMB) number is not displayed; the OMB number is 3117–0016/USITC No. 05–5–126, expiration date June 30, 2005. Public reporting burden for the request is estimated to average 10 hours per response. Please send comments regarding the accuracy of this burden estimate to the Office of Investigations, U.S. International Trade Commission, 500 E Street, SW., Washington, DC 20436.

thereof from France, Germany, Italy, Japan, Singapore, and the United Kingdom (Investigations Nos. 731–TA–391–394, 396, and 399), the Commission made affirmative determinations with respect to three *Domestic Industries,* each devoted to the production of one of the three *Domestic Like Products,* as defined above. One Commissioner defined the *Domestic Industry* differently. In its full five-year review determinations, the Commission made affirmative determinations with respect to three *Domestic Industries,* each devoted to the production of one of the three *Domestic Like Products,* as defined above. For purposes of this notice, you should report information on three *Domestic Industries,* each devoted to the production of one of the following three *Domestic Like Products:* (1) Ball bearings, (2) spherical plain bearings, and (3) tapered roller bearings.

(5) An *Importer* is any person or firm engaged, either directly or through a parent company or subsidiary, in importing the *Subject Merchandise* into the United States from a foreign manufacturer or through its selling agent.

Participation in the reviews and public service list. Persons, including industrial users of the *Subject Merchandise* and, if the merchandise is sold at the retail level, representative consumer organizations, wishing to participate in the reviews as parties must file an entry of appearance with the Secretary to the Commission, as provided in section 201.11(b)(4) of the Commission's rules, no later than 21 days after publication of this notice in the **Federal Register**. The Secretary will maintain a public service list containing the names and addresses of all persons, or their representatives, who are parties to the reviews.

Former Commission employees who are seeking to appear in Commission five-year reviews are reminded that they are required, pursuant to 19 CFR 201.15, to seek Commission approval if the matter in which they are seeking to appear was pending in any manner or form during their Commission employment. The Commission is seeking guidance as to whether a second transition five-year review is the ''same particular matter'' as the underlying original investigation for purposes of 19 CFR 201.15 and 18 U.S.C. 207, the post employment statute for Federal employees. Former employees may seek informal advice from Commission ethics officials with respect to this and the related issue of whether the employee's participation was ''personal and substantial.'' However, any informal consultation will not relieve former employees of the obligation to seek approval to appear from the Commission under its rule 201.15. For ethics advice, contact Carol McCue Verratti, Deputy Agency Ethics Official, at 202–205–3088.

Limited disclosure of business proprietary information (BPI) under an administrative protective order (APO) and APO service list. Pursuant to section 207.7(a) of the Commission's rules, the Secretary will make BPI submitted in these reviews available to authorized applicants under the APO issued in the reviews, provided that the application is made no later than 21 days after publication of this notice in the **Federal Register**. Authorized applicants must represent interested parties, as defined in 19 U.S.C. § 1677(9), who are parties to the reviews. A separate service list will be maintained by the Secretary for those parties authorized to receive BPI under the APO.

Certification. Pursuant to section 207.3 of the Commission's rules, any person submitting information to the Commission in connection with these reviews must certify that the information is accurate and complete to the best of the submitter's knowledge. In making the certification, the submitter will be deemed to consent, unless otherwise specified, for the Commission, its employees, and contract personnel to use the information provided in any other reviews or investigations of the same or comparable products which the Commission conducts under Title VII of the Act, or in internal audits and investigations relating to the programs and operations of the Commission pursuant to 5 U.S.C. Appendix 3.

Written submissions. Pursuant to section 207.61 of the Commission's rules, each interested party response to this notice must provide the information specified below. The deadline for filing such responses is July 21, 2005. Pursuant to section 207.62(b) of the Commission's rules, eligible parties (as specified in Commission rule 207.62(b)(1)) may also file comments concerning the adequacy of responses to the notice of institution and whether the Commission should conduct expedited or full reviews. The deadline for filing such comments is August 16, 2005. All written submissions must conform with the provisions of sections 201.8 and 207.3 of the Commission's rules and any submissions that contain BPI must also conform with the requirements of sections 201.6 and 207.7 of the Commission's rules. The Commission's rules do not authorize filing of submissions with the Secretary by facsimile or electronic means, except to the extent permitted by section 201.8 of the Commission's rules, as amended, 67 FR 68036 (November 8, 2002). Also, in accordance with sections 201.16(c) and 207.3 of the Commission's rules, each document filed by a party to the reviews must be served on all other parties to the reviews (as identified by either the public or APO service list as appropriate), and a certificate of service must accompany the document (if you are not a party to the reviews you do not need to serve your response).

Inability to provide requested information. Pursuant to section 207.61(c) of the Commission's rules, any interested party that cannot furnish the information requested by this notice in the requested form and manner shall notify the Commission at the earliest possible time, provide a full explanation of why it cannot provide the requested information, and indicate alternative forms in which it can provide equivalent information. If an interested party does not provide this notification (or the Commission finds the explanation provided in the notification inadequate) and fails to provide a complete response to this notice, the Commission may take an adverse inference against the party pursuant to section 776(b) of the Act in making its determinations in the reviews.

Information to be Provided in Response to this Notice of Institution: Please provide the requested information separately for each *Domestic Like Product,* as defined by the Commission in its review determinations, and for each of the products identified by Commerce as *Subject Merchandise.* If you are a domestic producer, union/worker group, or trade/business association; import/export *Subject Merchandise* from more than one *Subject Country*; or produce *Subject Merchandise* in more than one *Subject Country,* you may file a single response. If you do so, please ensure that your response to each question includes the information requested for each pertinent *Subject Country.* As used below, the term ''firm'' includes any related firms.

(1) The name and address of your firm or entity (including World Wide Web address if available) and name, telephone number, fax number, and E-mail address of the certifying official.

(2) A statement indicating whether your firm/entity is a U.S. producer of the *Domestic Like Product,* a U.S. union or worker group, a U.S. importer of the *Subject Merchandise,* a foreign producer or exporter of the *Subject Merchandise,* a U.S. or foreign trade or business association, or another interested party

(including an explanation). If you are a union/worker group or trade/business association, identify the firms in which your workers are employed or which are members of your association.

(3) A statement indicating whether your firm/entity is willing to participate in these reviews by providing information requested by the Commission.

(4) A statement of the likely effects of the revocation of the antidumping duty orders on the *Domestic Industries* in general and/or your firm/entity specifically. In your response, please discuss the various factors specified in section 752(a) of the Act (19 U.S.C. 1675a(a)) including the likely volume of subject imports, likely price effects of subject imports, and likely impact of imports of *Subject Merchandise* on the *Domestic Industries.*

(5) A list of all known and currently operating U.S. producers of the *Domestic Like Products*. Identify any known related parties and the nature of the relationship as defined in section 771(4)(B) of the Act (19 U.S.C. 1677(4)(B)).

(6) A list of all known and currently operating U.S. importers of the *Subject Merchandise* and producers of the *Subject Merchandise* in each *Subject Country* that currently export or have exported *Subject Merchandise* to the United States or other countries after 1998.

(7) If you are a U.S. producer of the *Domestic Like Product,* provide the following information on your firm's operations on that product during calendar year 2004 (report quantity data in number of bearings and value data in U.S. dollars, f.o.b. plant). If you are a union/worker group or trade/business association, provide the information, on an aggregate basis, for the firms in which your workers are employed/which are members of your association.

(a) Production (quantity) and, if known, an estimate of the percentage of total U.S. production of each *Domestic Like Product* accounted for by your firm's(s') production;

(b) the quantity and value of U.S. commercial shipments of each *Domestic Like Product* produced in your U.S. plant(s); and

(c) the quantity and value of U.S. internal consumption/company transfers of each *Domestic Like Product* produced in your U.S. plant(s).

(8) If you are a U.S. importer or a trade/business association of U.S. importers of the *Subject Merchandise* from the *Subject Country(ies)*, provide the following information on your firm's(s') operations on that product during calendar year 2004 (report quantity data in number of bearings and value data in U.S. dollars). If you are a trade/business association, provide the information, on an aggregate basis, for the firms which are members of your association.

(a) The quantity and value (landed, duty-paid but not including antidumping duties) of U.S. imports and, if known, an estimate of the percentage of total U.S. imports of *Subject Merchandise* from each *Subject Country* accounted for by your firm's(s') imports;

(b) the quantity and value (f.o.b. U.S. port, including antidumping duties) of U.S. commercial shipments of *Subject Merchandise* imported from each *Subject Country;* and

(c) the quantity and value (f.o.b. U.S. port, including antidumping duties) of U.S. internal consumption/company transfers of *Subject Merchandise* imported from each *Subject Country.*

(9) If you are a producer, an exporter, or a trade/business association of producers or exporters of the *Subject Merchandise* in the *Subject Country(ies),* provide the following information on your firm's(s') operations on that product during calendar year 2004 (report quantity data in number of bearings and value data in U.S. dollars, landed and duty-paid at the U.S. port but not including antidumping duties). If you are a trade/business association, provide the information, on an aggregate basis, for the firms which are members of your association.

(a) Production (quantity) and, if known, an estimate of the percentage of total production of *Subject Merchandise* in each *Subject Country* accounted for by your firm's(s') production; and

(b) the quantity and value of your firm's(s') exports to the United States of *Subject Merchandise* and, if known, an estimate of the percentage of total exports to the United States of *Subject Merchandise* from each *Subject Country* accounted for by your firm's(s') exports.

(10) Identify significant changes, if any, in the supply and demand conditions or business cycle for each *Domestic Like Product* that have occurred in the United States or in the market for the *Subject Merchandise* in each *Subject Country* after 1998, and significant changes, if any, that are likely to occur within a reasonably foreseeable time. Supply conditions to consider include technology; production methods; development efforts; ability to increase production (including the shift of production facilities used for other products and the use, cost, or availability of major inputs into production); and factors related to the ability to shift supply among different national markets (including barriers to importation in foreign markets or changes in market demand abroad). Demand conditions to consider include end uses and applications; the existence and availability of substitute products; and the level of competition among each *Domestic Like Product* produced in the United States, *Subject Merchandise* produced in each *Subject Country,* and such merchandise from other countries.

(11) (Optional) A statement of whether you agree with the above definitions of the *Domestic Like Products* and *Domestic Industries;* if you disagree with either or both of these definitions, please explain why and provide alternative definitions.

Authority: These reviews are being conducted under authority of title VII of the Tariff Act of 1930; this notice is published pursuant to section 207.61 of the Commission's rules.

By order of the Commission.

Issued: May 23, 2005.

Marilyn R. Abbott,

Secretary to the Commission.

[FR Doc. 05–10885 Filed 5–31–05; 8:45 am]

BILLING CODE 7020–02–P

INTERNATIONAL TRADE COMMISSION

[Inv. Nos. 731–TA–344, 391A, 392A, 392C, 393A, 394A, 396, and 399A (Second Review)]

Certain Bearings From China, France, Germany, Italy, Japan, Singapore, and the United Kingdom

AGENCY: United States International Trade Commission.

ACTION: Notice of Commission determinations to conduct full five-year reviews concerning the antidumping duty orders on certain bearings from China, France, Germany, Italy, Japan, Singapore, and the United Kingdom.

SUMMARY: The Commission hereby gives notice that it will proceed with full reviews pursuant to section 751(c)(5) of the Tariff Act of 1930 (19 U.S.C. 1675(c)(5)) to determine whether revocation of the antidumping duty orders on certain bearings from China, France, Germany, Italy, Japan, Singapore, and the United Kingdom would be likely to lead to continuation or recurrence of material injury within a reasonably foreseeable time. A schedule for the reviews will be established and announced at a later date. For further information concerning the conduct of these reviews and rules of general application, consult the Commission's Rules of Practice and Procedure, part 201, subparts A through E (19 CFR part 201), and part 207, subparts A, D, E, and F (19 CFR part 207).

EFFECTIVE DATE: September 7, 2005.

FOR FURTHER INFORMATION CONTACT: Debra Baker (202–205–3180), Office of Investigations, U.S. International Trade Commission, 500 E Street SW., Washington, DC 20436. Hearing-impaired persons can obtain information on this matter by contacting the Commission's TDD terminal on 202–205–1810. Persons with mobility impairments who will need special assistance in gaining access to the Commission should contact the Office of the Secretary at 202–205–2000. General information concerning the Commission may also be obtained by accessing its Internet server (*http://www.usitc.gov*). The public record for these reviews may be viewed on the Commission's electronic docket (EDIS) at *http://edis.usitc.gov*.

SUPPLEMENTARY INFORMATION: On September 7, 2005, the Commission determined that it should proceed to full reviews in the subject five-year reviews pursuant to section 751(c)(5) of

the Act.[1] The Commission found that both the domestic and respondent interested party group responses to its notice of institution (70 FR 31531, June 1, 2005) were adequate.[2] A record of the Commissioners' votes, the Commission's statement on adequacy, and any individual Commissioner's statements will be available from the Office of the Secretary and at the Commission's Web site.

Authority: These reviews are being conducted under authority of title VII of the Tariff Act of 1930; this notice is published pursuant to § 207.62 of the Commission's rules.

By order of the Commission.

Issued: September 9, 2005.

Marilyn R. Abbott,

Secretary to the Commission.

[FR Doc. 05–18338 Filed 9–14–05; 8:45 am]

BILLING CODE 7020–02–P

DEPARTMENT OF COMMERCE

International Trade Administration

(A–427–801, A–428–801, A–475–801, A–412–801)

Antifriction Bearings and Parts Thereof from France, Germany, Italy, and the United Kingdom; Five–Year Sunset Reviews of Antidumping Duty Orders; Final Results

AGENCY: Import Administration, International Trade Administration, Department of Commerce.

SUMMARY: On June 1, 2005, the Department of Commerce (the Department) initiated a sunset review of the antidumping duty orders on antifriction bearings and parts thereof from France, Germany, Italy and the United Kingdom pursuant to section 751(c) of the Tariff Act of 1930, as amended (the Act). On the basis of the notice of intent to participate and adequate substantive responses filed on behalf of the domestic interested parties and inadequate responses from respondent interested parties, the Department conducted expedited sunset reviews. As a result of these sunset reviews, the Department finds that revocation of the antidumping duty orders would likely lead to continuation or recurrence of dumping at the levels listed below in the section entitled ''Final Results of Reviews.''

EFFECTIVE DATE: October 5, 2005.

FOR FURTHER INFORMATION CONTACT: Zev Primor or Fred W. Aziz, Office 5, AD/CVD Operations, Import Administration, International Trade Administration, U.S. Department of Commerce, 14th Street and Constitution Avenue, NW, Washington, DC 20230; telephone: (202) 482–4114 or (202) 482–4023.

SUPPLEMENTARY INFORMATION:

Background

On June 1, 2005, the Department initiated sunset reviews of the antidumping duty orders on antifriction bearings and parts thereof from France, Germany, Italy, and the United Kingdom pursuant to section 751(c) of the Act. *See Initiation of Five–Year (''Sunset'') Reviews*, 70 FR 31423 (June 1, 2005). The Department received Notices of Intent to Participate from the Timken Company, Pacamor Kubar Bearings, RBC Bearings, and NSK Corporation (NSK USA) (collectively, ''the domestic interested parties'') within the deadline specified in 19 CFR 351.218(d)(1)(i) of the Department's regulations (''Sunset Regulations''). The domestic interested parties claimed interested–party status under section 771(9)(C) of the Act as producers of a domestic like product in the United States. We received complete substantive responses from the domestic interested parties within the 30–day deadline specified in 19 CFR 351.218(d)(3)(i).

We did not receive substantive responses from any respondent interested parties in the sunset reviews of the antidumping duty orders on antifriction bearings and parts thereof from France, Germany, or Italy. As a result, pursuant to section 751(c)(3)(B) of the Act and 19 CFR 351.218(e)(1)(ii)(C)(2), the Department conducted expedited sunset reviews of these orders.

For the sunset review of the antidumping duty order on antifriction bearings and parts thereof from the United Kingdom, the Department received a substantive response from respondent NSK Europe Ltd. and NSK Bearings Ltd. (collectively, NSK UK). The Department found that NSK UK did not meet the adequacy threshold pursuant to section 351.218(e)(1)(ii)(A) of the Sunset Regulations. For more information, see the Adequacy Determination Memorandum from the Sunset Team to Laurie Parkhill, dated July 21, 2005. As a result, pursuant to section 751(c)(3)(B) of the Act and 19

CFR 351.218(e)(1)(ii)(C)(2), the Department conducted an expedited sunset review of this order.

Scope of the Orders

Ball Bearings and Parts Thereof

The products covered by these orders are ball bearings and parts thereof (BBs). These products include all bearings that employ balls as the rolling element. Imports of these products are classified under the following categories: antifriction balls, ball bearings with integral shafts, ball bearings (including radial ball bearings) and parts thereof, and housed or mounted ball bearing units and parts thereof.

Imports of these products are classified under the following *Harmonized Tariff Schedule of the United States* (HTSUS) subheadings: 3926.90.45, 4016.93.00, 4016.93.10, 4016.93.50, 6909.19.5010, 8431.20.00, 8431.39.0010, 8482.10.10, 8482.10.50, 8482.80.00, 8482.91.00, 8482.99.05, 8482.99.2580, 8482.99.35, 8482.99.6595, 8483.20.40, 8483.20.80, 8483.50.8040, 8483.50.90, 8483.90.20, 8483.90.30, 8483.90.70, 8708.50.50, 8708.60.50, 8708.60.80, 8708.70.6060, 8708.70.8050, 8708.93.30, 8708.93.5000, 8708.93.6000, 8708.93.75, 8708.99.06, 8708.99.31, 8708.99.4960, 8708.99.50, 8708.99.5800, 8708.99.8080, 8803.10.00, 8803.20.00, 8803.30.00, 8803.90.30, and 8803.90.90.

Although the HTSUS subheadings above are provided for convenience and customs purposes, written descriptions of the scope of these orders remain dispositive.

Spherical Plain Bearings, Mounted or Unmounted, and Parts Thereof (France only):

These products include all spherical plain bearings (SPBs) that employ a spherically shaped sliding element and include spherical plain rod ends. Imports of these products are classified under the following HTSUS subheadings: 3926.90.45, 4016.93.00, 4016.93.00, 4016.93.10, 4016.93.50, 6909.50,10, 8483.30.80, 8483.90.30, 8485.90.00, 8708.93.5000, 8708.99.50, 8803.10.00, 8803.10.00, 8803.20.00, 8803.30.00, and 8803.90.90. The HTSUS subheadings are provided for convenience and customs purposes. The written description of the scope of this order is dispositive.

The size or precision grade of a bearing does not influence whether the bearing is covered by one of the orders. These orders cover all the subject bearings and parts thereof (inner race, outer race, cage, rollers, balls, seals, shields, etc.) outlined above with certain limitations. With regard to finished parts, all such parts are included in the scope of the these orders. For unfinished parts, such parts are included if (1) they have been heat–treated, or (2) heat treatment is not required to be performed on the part. Thus, the only unfinished parts that are not covered by these orders are those that will be subject to heat treatment after importation. The ultimate application of a bearing also does not influence whether the bearing is covered by the orders. Bearings designed for highly specialized applications are not excluded. Any of the subject bearings, regardless of whether they may ultimately be utilized in aircraft, automobiles, or other equipment, are within the scope of these orders.

For a listing of scope determinations which pertain to the orders, see the Scope Determination Memorandum (Scope Memorandum) from the Antifriction Bearings Team to Laurie Parkhill, dated April 15, 2005. The Scope Memorandum is on file in the Central Records Unit (CRU), Main Commerce Building, Room B–099, in the General Issues record (A–100–001) for the 03/04 reviews.

This sunset review covers imports of all producers and exporters of ball bearings, except for Paul Müller, for which the order was revoked. *See Antifriction Bearings and Parts Thereof From: France, Germany, Italy, Japan, Singapore, and the United Kingdom: Final Results of Antidumping Duty Administrative Reviews, Rescission of Administrative Reviews in Part, and Determination To Revoke Order in Part*, 69 FR 55574 (September 15, 2004).

Analysis of Comments Received

All issues raised in these cases are addressed in the ''Issues and Decision Memorandum'' from Barbara E. Tillman, Acting Deputy Assistant Secretary for Import Administration, to Joseph A. Spetrini, Acting Assistant Secretary for Import Administration, dated September 29, 2005 (Decision Memorandum), which is hereby adopted by this notice. The issues discussed in the Decision Memorandum include the likelihood of continuation or recurrence of dumping and the magnitude of the margin likely to prevail if the orders were revoked. Parties can find a complete discussion of all issues raised in these sunset reviews and the corresponding recommendations in this public memorandum, which is on file in the CRU, Room B–099 of the main Department building.

In addition, a complete version of the Decision Memorandum can be accessed directly on the Web at http://ia.ita.doc.gov. The paper copy and electronic version of the Decision Memorandum are identical in content.

Final Results of Reviews

We determine that revocation of the antidumping duty orders on antifriction bearings and parts thereof from France, Germany, Italy, and the United Kingdom would likely lead to continuation or recurrence of dumping at the following percentage weighted–average margins:

Manufacturers/exporters/producers	Weighted–average margin (percent)
France (BBs).	
SKF France	66.42
SNR Roulements	56.50
INA France	66.18
All Others	65.13
France (SPBs).	
SKF France	39.00
All Others	39.00
Germany (BBs).	
SKF Germany	132.25
FAG Germany	70.41
INA	31.29
All Others	68.89
Italy (BBs).	
SKF Italy	69.99
FAG Italy	68.29
All Others	155.57
United Kingdom.	
SKF	61.14
NSK/RHP	44.02
All Others	54.27

This notice also serves as the only reminder to parties subject to administrative protective orders (APO) of their responsibility concerning the return or destruction of proprietary information disclosed under APO in accordance with 19 CFR 351.305 of the Department's regulations. Timely notification of the return or destruction of APO materials or conversion to judicial protective order is hereby requested. Failure to comply with the regulations and terms of an APO is a violation which is subject to sanction.

We are issuing and publishing these results and notice in accordance with sections 751(c), 752, and 777(i)(1) of the Act.

Dated: September 29, 2005.

Barbara E. Tillman,

Acting Assistant Secretary for Import Administration.

[FR Doc. E5–5457 Filed 10–5–05; 8:45 am]

BILLING CODE: 3510–DS–P

DEPARTMENT OF COMMERCE

International Trade Administration

[A–570–601]

Tapered Roller Bearings from the People's Republic of China: Notice of Final Results of Expedited Sunset Review of Antidumping Duty Order

AGENCY: Import Administration, International Trade Administration, Department of Commerce.

SUMMARY: On June 1, 2005, the Department of Commerce (''the Department'') initiated the sunset review of the antidumping duty order on tapered roller bearings from the People's Republic of China (''China'') pursuant to section 751(c) of the Tariff Act of 1930, as amended (''the Act''). On the basis of a Notice of Intent to Participate, adequate substantive responses filed on behalf of domestic interested parties, and lack of response from respondent interested parties, the Department conducted an expedited (120-day) sunset review. As a result of this sunset review, the Department finds that revocation of the antidumping duty order would be likely to lead to continuation or recurrence of dumping. The dumping margins likely to prevail if the order were revoked are identified in the *Final Results of Review* section of this notice.

DATES: October 6, 2005.

FOR FURTHER INFORMATION: Maureen Flannery, AD/CVD Operations, Office 8, International Trade Administration, U.S. Department of Commerce, 14th Street & Constitution Avenue, NW., Washington, DC 20230; telephone: (202) 482–3020.

SUPPLEMENTARY INFORMATION:

Background

On June 1, 2005, the Department published the notice of initiation of the sunset review of the antidumping duty order on tapered roller bearings from China. *See Initiation of Five-Year (''Sunset'') Reviews*, 70 FR 31423 (June 1, 2005). On June 16, 2005, the Department received a joint Notice of Intent to Participate from RBC Bearings and The Timken Company (collectively ''domestic interested parties'') within the deadline specified in section 351.218(d)(1)(i) of the Department's regulations. The domestic interested parties claimed interested party status under section 771(9)(C) of the Act, as manufacturers, producers, or wholesalers in the United States of a domestic like product. On July 1, 2005, the Department received a complete substantive response from the domestic interested parties within the deadline specified in section 351.218(d)(3)(i) of the Department's regulations. The Department did not receive a response from any respondent interested party to this proceeding. As a result, pursuant to section 751(c)(3)(B) of the Act and section 351.218(e)(1)(ii)(C)(2) of the Department's regulations, the Department conducted an expedited review of this order.

Scope of the Order

Merchandise covered by this order is tapered roller bearings from China; flange, take up cartridge, and hanger units incorporating tapered roller bearings; and tapered roller housings (except pillow blocks) incorporating tapered rollers, with or without spindles, whether or not for automotive use. This merchandise is currently classifiable under the Harmonized Tariff Schedule of the United States (''HTSUS'') item numbers 8482.20.00, 8482.91.00.50, 8482.99.30, 8483.20.40, 8483.20.80, 8483.30.80, 8483.90.20, 8483.90.30, 8483.90.80, 8708.99.80.15, and 8708.99.80.80. Although the HTSUS item numbers are provided for convenience and customs purposes, the written description of the scope of the order is dispositive.

Analysis of Comments Received

All issues raised in this review are addressed in the ''Issues and Decision Memorandum'' (''Decision Memo'') from Barbara E. Tillman, Acting Deputy Assistant Secretary for Import Administration, to Joseph A. Spetrini, Acting Assistant Secretary for Import Administration, dated September 29, 2005, which is hereby adopted by this notice. The issues discussed in the Decision Memo include the likelihood of continuation or recurrence of dumping and the magnitude of the margins likely to prevail if the order were revoked. Parties can find a complete discussion of all issues raised in this review and the corresponding recommendations in this public memorandum which is on file in room B–099 of the main Commerce building.

In addition, a complete version of the Decision Memo can be accessed directly on the Web at *http://ia.ita.doc.gov/frn/index.html*, under the heading ''October 2005.'' The paper copy and electronic version of the Decision Memo are identical in content.

Final Results of Review

We determine that revocation of the antidumping duty order on tapered roller bearings from China would likely lead to continuation or recurrence of dumping at the following weighted-average percentage margins:

Manufacturers/Exporters/Producers	Weighted average margin (percent)
Zheijiang Changshan Changhe Bearing Co.	0.00
China National Machinery Import & Export Corp.	0.03
Zheijiang Wanxiang Group	0.03
Zheijiang Machinery Import & Export Corp.	0.11
Luoyang Bearing Corporation	3.20
Premier Bearing & Equipment, Ltd.	5.43
Liaoning Mec Group, Ltd.	9.72
China National Machinery and Equipment Import & Export Corp.	29.40
China-wide Rate	29.40

This notice also serves as the only reminder to parties subject to administrative protective order (''APO'') of their responsibility concerning the return or destruction of proprietary information disclosed under APO in accordance with section 351.305 of the Department's regulations. Timely notification of the return or destruction of APO materials or conversion to judicial protective order is hereby requested. Failure to comply with the regulations and terms of an APO is a violation which is subject to sanction.

We are issuing and publishing these results and notice in accordance with sections 751(c), 752, and 777(i)(1) of the Act.

Dated: September 29, 2005.

Barbara E. Tillman,

Acting Assistant Secretary for Import Administration.

[FR Doc. E5–5514 Filed 10–5–05; 8:45 am]

BILLING CODE 3510–DS–P

INTERNATIONAL TRADE COMMISSION

[Investigation Nos. 731–TA–344, 391–A, 392–A and C, 393–A, 394–A, 396, and 399–A (Second Review)]

Certain Bearings From China, France, Germany, Italy, Japan, Singapore, and the United Kingdom

AGENCY: United States International Trade Commission.

ACTION: Scheduling of full five-year reviews concerning the antidumping duty order investigations on certain bearings from China, France, Germany, Italy, Japan, Singapore, and the United Kingdom.

SUMMARY: The Commission hereby gives notice of the scheduling of full reviews pursuant to section 751(c)(5) of the Tariff Act of 1930 (19 U.S.C. 1675(c)(5)) (the Act) to determine whether revocation of the antidumping duty orders on certain bearings from China, France, Germany, Italy, Japan, Singapore, and the United Kingdom would be likely to lead to continuation or recurrence of material injury within a reasonably foreseeable time. The Commission has determined to exercise its authority to extend the review period by up to 90 days pursuant to 19 U.S.C. 1675(c)(5)(B). For further information concerning the conduct of these reviews and rules of general application, consult the Commission's Rules of Practice and Procedure, part 201, subparts A through E (19 CFR part 201), and part 207, subparts A, D, E, and F (19 CFR part 207).

EFFECTIVE DATE: October 12, 2005.

FOR FURTHER INFORMATION CONTACT: Debra Baker (202–205–3180), Office of Investigations, U.S. International Trade Commission, 500 E Street SW., Washington, DC 20436. Hearing-impaired persons can obtain information on this matter by contacting the Commission's TDD terminal on 202–205–1810. Persons with mobility impairments who will need special assistance in gaining access to the Commission should contact the Office of the Secretary at 202–205–2000. General information concerning the Commission may also be obtained by accessing its Internet server (*http://www.usitc.gov*). The public record for these reviews may be viewed on the Commission's electronic docket (EDIS) at *http://edis.usitc.gov.*

SUPPLEMENTARY INFORMATION:

Background. On September 7, 2005, the Commission determined that responses to its notice of institution of the subject five-year reviews were such that full reviews pursuant to section 751(c)(5) of the Act should proceed (70 F.R. 54568, September 15, 2005). A record of the Commissioners' votes, the Commission's statement on adequacy, and any individual Commissioner's statements are available from the Office of the Secretary and at the Commission's web site.

Participation in the reviews and public service list. Persons, including industrial users of the subject merchandise and, if the merchandise is sold at the retail level, representative consumer organizations, wishing to participate in these reviews as parties must file an entry of appearance with the Secretary to the Commission, as provided in section 201.11 of the Commission's rules, by 45 days after publication of this notice. A party that

filed a notice of appearance following publication of the Commission's notice of institution of the reviews need not file an additional notice of appearance. The Secretary will maintain a public service list containing the names and addresses of all persons, or their representatives, who are parties to the reviews.

Limited disclosure of business proprietary information (BPI) under an administrative protective order (APO) and BPI service list. Pursuant to section 207.7(a) of the Commission's rules, the Secretary will make BPI gathered in these reviews available to authorized applicants under the APO issued in the reviews, provided that the application is made by 45 days after publication of this notice. Authorized applicants must represent interested parties, as defined by 19 U.S.C. 1677(9), who are parties to the reviews. A party granted access to BPI following publication of the Commission's notice of institution of the reviews need not reapply for such access. A separate service list will be maintained by the Secretary for those parties authorized to receive BPI under the APO.

Staff report. The prehearing staff report in the reviews will be placed in the nonpublic record on April 3, 2006, and a public version will be issued thereafter, pursuant to section 207.64 of the Commission's rules.

Hearing. The Commission will hold a hearing in connection with the reviews beginning at 9:30 a.m. on April 25, 2006, at the International Trade Commission Building. Requests to appear at the hearing should be filed in writing with the Secretary to the Commission on or before April 14, 2006. A nonparty who has testimony that may aid the Commission's deliberations may request permission to present a short statement at the hearing. All parties and nonparties desiring to appear at the hearing and make oral presentations should attend a prehearing conference to be held at 9:30 a.m. on April 18, 2006, at the U.S. International Trade Commission Building. Oral testimony and written materials to be submitted at the public hearing are governed by sections 201.6(b)(2), 201.13(f), 207.24, and 207.66 of the Commission's rules. Parties must submit any request to present a portion of their hearing testimony *in camera* no later than 7 business days prior to the date of the hearing.

Written submissions. Each party to the reviews may submit a prehearing brief to the Commission. Prehearing briefs must conform with the provisions of section 207.65 of the Commission's rules; the deadline for filing is April 12, 2006. Parties may also file written testimony in connection with their presentation at the hearing, as provided in section 207.24 of the Commission's rules, and posthearing briefs, which must conform with the provisions of section 207.67 of the Commission's rules. The deadline for filing posthearing briefs is May 4, 2006; witness testimony must be filed no later than three days before the hearing. In addition, any person who has not entered an appearance as a party to the reviews may submit a written statement of information pertinent to the subject of the reviews on or before May 4, 2006. On May 30, 2006, the Commission will make available to parties all information on which they have not had an opportunity to comment. Parties may submit final comments on this information on or before June 1, 2006, but such final comments must not contain new factual information and must otherwise comply with section 207.68 of the Commission's rules. All written submissions must conform with the provisions of section 201.8 of the Commission's rules; any submissions that contain BPI must also conform with the requirements of sections 201.6, 207.3, and 207.7 of the Commission's rules. The Commission's rules do not authorize filing of submissions with the Secretary by facsimile or electronic means, except to the extent permitted by section 201.8 of the Commission's rules, as amended, 67 FR 68036 (November 8, 2002). Even where electronic filing of a document is permitted, certain documents must also be filed in paper form, as specified in II (C) of the Commission's Handbook on Electronic Filing Procedures, 67 FR 68168, 68173 (November 8, 2002).

Additional written submissions to the Commission, including requests pursuant to section 201.12 of the Commission's rules, shall not be accepted unless good cause is shown for accepting such submissions, or unless the submission is pursuant to a specific request by a Commissioner or Commission staff.

In accordance with sections 201.16(c) and 207.3 of the Commission's rules, each document filed by a party to the reviews must be served on all other parties to the reviews (as identified by either the public or BPI service list), and a certificate of service must be timely filed. The Secretary will not accept a document for filing without a certificate of service.

Authority: These reviews are being conducted under authority of title VII of the Tariff Act of 1930; this notice is published pursuant to section 207.62 of the Commission's rules.

By order of the Commission.

Issued: October 13, 2005.

Marilyn R. Abbott,

Secretary to the Commission.

[FR Doc. 05–20838 Filed 10–17–05; 8:45 am]

BILLING CODE 7020–02–P

I

INTERNATIONAL TRADE COMMISSION

[Investigation Nos. 731–TA–344, 391–A, 392–A and C, 393–A, 394–A, 396, and 399–A (Second Review)]

Certain Bearings From China, France, Germany, Italy, Japan, Singapore, and the United Kingdom

AGENCY: United States International Trade Commission.

ACTION: Revised schedule for the subject investigations.

EFFECTIVE DATE: December 9, 2005.

FOR FURTHER INFORMATION CONTACT: Debra Baker (202–205–3180), Office of Investigations, U.S. International Trade Commission, 500 E Street, SW., Washington, DC 20436. Hearing-impaired persons can obtain information on this matter by contacting the Commission's TDD terminal on 202–205–1810. Persons with mobility impairments who will need special assistance in gaining access to the Commission should contact the Office of the Secretary at 202–205–2000. General information concerning the Commission may also be obtained by accessing its Internet server (*http://www.usitc.gov*). The public record for these investigations may be viewed on the Commission's electronic docket (EDIS) at *http://edis.usitc.gov*.

SUPPLEMENTARY INFORMATION: On October 12, 2005, the Commission established a schedule for the conduct of the final phase of the subject investigations (70 FR 60556, October 18, 2005). Subsequently, the Commission received a request from an interested party to change the scheduled date for the public hearing. The Commission, therefore, is revising its schedule.

The Commission's new schedule for the investigations is as follows: requests to appear at the hearing must be filed with the Secretary to the Commission not later than April 20, 2006; the prehearing conference will be held at the U.S. International Trade Commission Building at 9:30 a.m. on April 25, 2006; the prehearing staff report will be placed in the nonpublic record on April 7, 2006; the deadline for filing prehearing briefs is April 21, 2006; the hearing will be held at the U.S. International Trade Commission Building at 9:30 a.m. on May 2, 2006; the deadline for filing posthearing briefs is May 11, 2006; the Commission will make its final release of information on June 6, 2006; and final party comments are due on June 8, 2006.

For further information concerning these investigations see the

Commission's notice cited above and the Commission's Rules of Practice and Procedure, part 201, subparts A through E (19 CFR part 201), and part 207, subparts A and C (19 CFR part 207).

Authority: These investigations are being conducted under authority of title VII of the Tariff Act of 1930; this notice is published pursuant to section 207.21 of the Commission's rules.

By order of the Commission.

Issued: December 13, 2005.

Marilyn R. Abbott,

Secretary to the Commission.

[FR Doc. E5–7511 Filed 12–19–05; 8:45 am]

BILLING CODE 7020–02–P

DEPARTMENT OF COMMERCE

International Trade Administration

[A–588–804, A–559–801]

Ball Bearings and Parts Thereof from Japan and Singapore; Five-year Sunset Reviews of Antidumping Duty Orders; Final Results

AGENCY: Import Administration, International Trade Administration, Department of Commerce.

SUMMARY: On June 1, 2005, the Department of Commerce (the Department) initiated sunset reviews of the antidumping duty orders on ball bearings from Japan and Singapore. See *Initiation of Five-year (Sunset) Reviews*, 70 FR 31423 (June 1, 2005). On the basis of a notice of intent to participate and adequate substantive responses filed on behalf of the interested parties, the Department conducted full (240-day) sunset reviews pursuant to section 751(c) of the Tariff Act of 1930, as amended (the Act), and 19 CFR 351.218(e)(2)(i). As a result of these sunset reviews, the Department finds that revocation of the antidumping duty orders would likely lead to continuation or recurrence of dumping at the levels listed below in the section entitled ''Final Results of Reviews.'' Based on our analysis of the comments we received, we find that it is appropriate to report a more recently calculated margin to the International Trade Commission for certain respondents.

EFFECTIVE DATE: May 4, 2006.

FOR FURTHER INFORMATION CONTACT: Zev Primor or Fred Aziz, Office 5, AD/CVD Operations, Import Administration, International Trade Administration, U.S. Department of Commerce, 14th Street & Constitution Avenue, NW., Washington, DC, 20230; telephone: 202–482–4114 or (202) 482–4023, respectively.

SUPPLEMENTARY INFORMATION:

Background

On June 1, 2005, the Department published the notice of initiation of the second sunset reviews of the antidumping duty orders on ball bearings from Japan and Singapore. See *Initiation of Five-year (''Sunset'') Reviews*, 70 FR 31423 (June 1, 2005). On December 28, 2005, the Department published the preliminary results of the full sunset reviews of the antidumping duty orders on ball bearings from Japan and Singapore. See *Ball Bearings and Parts Thereof From Japan and Singapore; Five-year Sunset Reviews of Antidumping Duty Orders; Preliminary Results*, 70 FR 76754 (December 28,

2005).[1] In our preliminary results, we found that revocation of the orders orders would likely lead to continuation or recurrence of dumping.

On January 27, 2006, the Department received case briefs from the following parties: *Japan* - Koyo Seiko Co., Ltd., and Koyo Corporation of USA (collectively, Koyo), NTN Corporation and American NTN Bearing Manufacture Corporation (collectively, NTN), and NSK Corp. and NSK Ltd. (collectively, NSK); *Singapore* - NMB Singapore Ltd. and Pelmec Industries (Pte.) Ltd. (collectively, NMB/Pelmec). On February 1, 2006, the Department received a rebuttal brief from the Timken Company, Pacamor Kubar Bearings, and RBC Bearings (collectively, the domestic interested parties).

Scope of the Order

The products covered by these orders are ball bearings and parts thereof. These products include all bearings that employ balls as the rolling element. Imports of these products are classified under the following categories: antifriction balls, ball bearings with integral shafts, ball bearings (including radial ball bearings) and parts thereof, and housed or mounted ball bearing units and parts thereof.

Imports of these products are classified under the following *Harmonized Tariff Schedule of the United States* (HTSUS) subheadings: 3926.90.45, 4016.93.00, 4016.93.10, 4016.93.50, 6909.19.5010, 8431.20.00, 8431.39.0010, 8482.10.10, 8482.10.50, 8482.80.00, 8482.91.00, 8482.99.05, 8482.99.2580, 8482.99.35, 8482.99.6595, 8483.20.40, 8483.20.80, 8483.50.8040, 8483.50.90, 8483.90.20, 8483.90.30, 8483.90.70, 8708.50.50, 8708.60.50, 8708.60.80, 8708.70.6060, 8708.70.8050, 8708.93.30, 8708.93.5000, 8708.93.6000, 8708.93.75, 8708.99.06, 8708.99.31, 8708.99.4960, 8708.99.50, 8708.99.5800, 8708.99.8080, 8803.10.00, 8803.20.00, 8803.30.00, 8803.90.30, and 8803.90.90.

Although the HTSUS subheadings above are provided for convenience and customs purposes, written descriptions of the scopes of these orders remain dispositive.

Analysis of Comments Received

All issues raised in these sunset reviews are addressed in the ''Issues and Decision Memorandum'' from Stephen J. Claeys, Deputy Assistant Secretary for Import Administration, to David M. Spooner, Assistant Secretary for Import Administration, dated April 27, 2006 (Decision Memo), which is hereby adopted by this notice. The issues discussed in the Decision Memo include the likelihood of continuation or recurrence of dumping, the magnitude of the margins likely to prevail if the antidumping duty orders were revoked, and support of the domestic industry. Parties can find a complete discussion of all issues raised in these sunset reviews and the corresponding recommendations in this public memorandum, which is on file in room B–099 of the main Department building.

In addition, a complete version of the Decision Memo can be accessed directly on the Web at http://ia.ita.doc.gov/frn. The paper copy and electronic version of the Decision Memo are identical in content.

Final Results of Review

We determine that revocation of the antidumping duty orders on ball bearings from Japan and Singapore would be likely to lead to continuation or recurrence of dumping at the following weighted–average margins:

Manufacturers/Exporters/Producers	Weighted–Average Margin (Percent)
Japan.	
Koyo Seiko Co., Ltd.	12.78
Minebea Co., Ltd.	106.61
Nachi–Fujikoshi Corp.	48.69
NSK Ltd.	8.28
NTN Corp.	5.93
All Other Japanese Manufacturers/Exporters/Producers	45.83
Singapore.	
NMB/Pelmec	25.08
All Other Singaporean Manufacturers/Exporters/Producers	25.08

Notification Regarding Administrative Protective Order

This notice also serves as the only reminder to parties subject to administrative protective order (APO) of their responsibility concerning the return or destruction of proprietary information disclosed under APO in accordance with 19 CFR 351.305 of the Department's regulations. Timely notification of the return or destruction of APO materials or conversion to judicial protective order is hereby requested. Failure to comply with the regulations and terms of an APO is a violation which is subject to sanction.

We are issuing and publishing these results and notice in accordance with sections 751(c), 752, and 777(i)(1) of the Act.

Dated: April 27, 2006.

David M. Spooner,

Assistant Secretary for Import Administration.

[FR Doc. E6–6763 Filed 5–3–06; 8:45 am]

BILLING CODE 3510–DS–S

[1] For a full discussion of the history of these orders prior to the preliminary results of these sunset reviews, see the December 28, 2005, decision memorandum accompanying the preliminary results of sunset reviews.

INTERNATIONAL TRADE COMMISSION

[Investigation Nos. 731–TA–344, 391–A, 392–A and C, 393–A, 394–A, 396, and 399–A (Second Review)]

Certain Bearings From China, France, Germany, Italy, Japan, Singapore, and the United Kingdom

AGENCY: United States International Trade Commission.

ACTION: Revised schedule for the subject five-year reviews.

DATES: *Effective Date:* May 4, 2006.

FOR FURTHER INFORMATION CONTACT: Debra Baker (202–205–3180), Office of Investigations, U.S. International Trade Commission, 500 E Street SW., Washington, DC 20436. Hearing-impaired persons can obtain information on this matter by contacting the Commission's TDD terminal on 202–205–1810. Persons with mobility impairments who will need special assistance in gaining access to the Commission should contact the Office of the Secretary at 202–205–2000. General information concerning the Commission may also be obtained by accessing its Internet server (*http://www.usitc.gov*). The public record for these reviews may be viewed on the Commission's electronic docket (EDIS) at *http://edis.usitc.gov.*

SUPPLEMENTARY INFORMATION: On October 12, 2005, the Commission established its schedule for the conduct of the subject five-year reviews (70 FR

60556, October 18, 2005) and subsequently revised its schedule (70 FR 75482, December 20, 2005). The Commission hereby gives notice that it is further revising the schedule for its final determinations in the subject five-year reviews.

The Commission's schedule is revised as follows: The posthearing briefs are due May 15, 2006; the closing of the record and final release of information is July 24, 2006; and final comments on this information are due on or before July 27, 2006.

For further information concerning these review investigations see the Commission's notices cited above and the Commission's Rules of Practice and Procedure, part 201, subparts A through E (19 CFR part 201), and part 207, subparts A and C (19 CFR part 207).

Authority: These five-year reviews are being conducted under authority of title VII of the Tariff Act of 1930; this notice is published pursuant to section 207.21 of the Commission's rules.

By order of the Commission.

Issued: May 5, 2006.

Marilyn R. Abbott,

Secretary to the Commission.

[FR Doc. E6–7152 Filed 5–10–06; 8:45 am]

BILLING CODE 7020–02–P

EXPLANATION OF COMMISSION DETERMINATION ON ADEQUACY
in
Certain Bearings from China, France, Germany, Italy, Japan, Singapore, and the United Kingdom
Inv. Nos. 731-TA-344, 391A, 392A, 392C, 393A, 394A, 396, and 399A (Second Review)

On September 7, 2005, the Commission unanimously determined that it should proceed to full reviews in the subject five-year reviews pursuant to section 751(c)(5) of the Tariff Act of 1930, as amended, 19 U.S.C. § 1675(c)(5).[1]

Tapered Roller Bearings from China, Inv. No. 731-TA-344 (Second Review)

The Commission determined that the domestic interested party group response to the notice of institution was adequate with respect to this review. The Commission received adequate responses from four domestic producers of tapered roller bearings ("TRBs"), and from two labor unions whose members are employed in the domestic production of TRBs. Because the Commission received adequate responses from domestic producers accounting for a majority of U.S. production of TRBs, the Commission determined that the domestic interested party group response was adequate.[2]

The Commission received an adequate joint response with company-specific data from an association representing foreign producers and exporters of TRBs from China, and 15 foreign producers and exporters of TRBs from China. The Commission also received an adequate response from a Chinese producer of TRBs and an importer of TRBs from China (The Timken Co.). Because the Commission received an adequate response representing a substantial

---

[1] Vice Chairman Deanna Tanner Okun and Commissioner Shara L. Aranoff did not participate in these adequacy determinations.

[2] The labor unions that responded to the notice of institution were unable to estimate the percentage of domestic production accounted for by domestic producers at which its members were employed.

proportion of production and exports of TRBs from China, the Commission determined that the respondent interested party group response from China was adequate. Accordingly, the Commission determined to proceed to a full review in *Tapered Roller Bearings from China.*

Spherical Plain Bearings from France, Inv. No. 731-TA-392C (Second Review)

The Commission determined that the domestic interested party group response to the notice of institution was adequate with respect to this review. The Commission received adequate responses from four domestic producers of spherical plain bearings ("SPBs"), and from two labor unions whose members are employed in the domestic production of SPBs. Because the Commission received adequate responses from domestic producers accounting for a substantial proportion of U.S. production of SPBs, the Commission determined that the domestic interested party group response was adequate.[3]

The Commission received an adequate response from SKF Aerospace France, a producer and exporter of SPBs from France. Because the Commission received an adequate response representing a substantial proportion of production and exports of SPBs from France, the Commission determined that the respondent interested party group response from France was adequate.[4] Accordingly, the Commission determined to proceed to a full review in *Spherical Plain Bearings from France.*

---

[3] The labor unions that responded to the notice of institution were unable to estimate the percentage of domestic production accounted for by domestic producers at which its members were employed.

[4] Commissioners Hillman and Pearson determined that the respondent interested party group response with respect to SPBs from France was inadequate. They joined their colleagues in voting for a full review.

The Commission received adequate responses, in individual and joint filings, from 15 domestic producers of ball bearings, and two labor unions whose members are employed in the domestic production of ball bearings. Because the Commission received adequate responses from domestic producers accounting for a majority of domestic production of ball bearings, the Commission determined that the domestic interested party group response was adequate.[5]

In the review concerning subject ball bearings from France, the Commission received an adequate joint response with company-specific information from two producers and exporters of subject ball bearings from France, SKF France S.A. and SKF Aerospace France, as well as from an importer of the subject bearings, SKF USA Inc. The Commission also received an adequate response from the The Timken Co., a producer of subject ball bearings from France. Because the Commission received an adequate response representing a substantial percentage of production, exports, and imports of ball bearings from France, the Commission determined that the respondent interested party group response from France was adequate. Accordingly, the Commission determined to proceed to a full review in *Ball Bearings from France*.

In the review concerning subject ball bearings from Germany, the Commission received an adequate joint response with company-specific information from SKF GmbH, a producer and exporter of subject ball bearings from Germany, and from SKF USA Inc., an importer of the subject bearings. The Commission also received an adequate joint response with company-

[5] The labor unions that responded to the notice of institution were unable to estimate the percentage of domestic production accounted for by domestic producers at which its members were employed.

specific information from the INA Companies, which include a producer and exporter, as well as an importer, of the subject ball bearings from Germany. The Commission received an adequate response from the The Timken Co., a producer of subject ball bearings from Germany. Because the Commission received an adequate response representing a substantial percentage of production, exports, and imports of ball bearings from Germany, the Commission determined that the respondent interested party group response from Germany was adequate.[6] Accordingly, the Commission determined to proceed to a full review in *Ball Bearings from Germany*.

In the review concerning subject ball bearings from Italy, the Commission received an adequate joint response with company-specific information from SKF Industrie S.p.A., a producer and exporter of subject ball bearings from Italy, and from SKF USA Inc., an importer of the subject bearings. The Commission also received an adequate joint response with company-specific information from the INA Companies, which include an exporter and an importer of the subject ball bearings from Italy. Because the Commission received an adequate response representing all or nearly all production, exports, and imports of ball bearings from Italy, the Commission determined that the respondent interested party group response from Italy was adequate. Accordingly, the Commission determined to proceed to a full review in *Ball Bearings from Italy*.

In the review concerning subject ball bearings from Japan, the Commission received adequate responses, in individual and joint filings, from four producers and exporters of subject ball bearing from Japan, and from eight importers of the subject bearings. Because the

[6] Commissioner Hillman determined that the respondent interested party group response with respect to ball bearings from Germany was inadequate. She joined her colleagues in voting for a full review.

Commission received an adequate response representing a substantial percentage of production and exports of subject ball bearings from Japan, and a majority of imports of the subject bearings, the Commission determined that the respondent interested party group response from Japan was adequate. Accordingly, the Commission determined to proceed to a full review in *Ball Bearings from Japan*.

In the review concerning subject ball bearings from Singapore, the Commission received an adequate joint response with company-specific information from NMB Singapore Ltd. and Pelmec Industries (Pte.) Ltd., two producers and exporters of the subject bearings, as well as from NMB Technologies Corp., an importer of the subject bearings. Because the Commission received an adequate response representing all or nearly all production, exports, and imports of subject ball bearings from Singapore, the Commission determined that the respondent interested party group response from Singapore was adequate. Accordingly, the Commission determined to proceed to a full review in *Ball Bearings from Singapore*.

In the review concerning subject ball bearings from the United Kingdom, the Commission received an adequate joint response with company-specific information from the INA Companies, which include a producer and exporter of the subject bearings, and an importer of the subject bearings. The Commission also received an adequate joint response with company-specific information from NSK Europe Ltd., a producer and exporter of the subject bearings, and NSK Corp., an importer of the subject bearings. The Commission received adequate responses from SKF Aeroengine Bearings UK and The Timken Co., both producers and exporters of the subject ball bearings. Because the Commission received an adequate response representing a substantial proportion of production, exports, and imports of subject ball

bearings from the United Kingdom, the Commission determined that the respondent interested party group response from the United Kingdom was adequate. Accordingly, the Commission determined to proceed to a full review in *Ball Bearings from the United Kingdom*.

A record of the Commissioners' votes is available from the Office of the Secretary and the Commission's web site (http://www.usitc.gov).

APPENDIX B

HEARING WITNESSES

CALENDAR OF PUBLIC HEARING

Those listed below appeared as witnesses at the United States International Trade Commission's hearing:

Subject:	Certain Bearings from China, France, Germany, Italy, Japan, Singapore, and the United Kingdom
Inv. Nos.:	731-TA-344, 391-A, 392-A and C, 393-A, 394-A, 396, and 399-A (Second Review)
Date and Time:	May 2, 2006 - 9:30 a.m.

Sessions were held in connection with these reviews in the Main Hearing Room, 500 E Street (room 101), SW, Washington, D.C.

OPENING REMARKS:

In Support of Continuation of Orders (**Terence P. Stewart**, Stewart and Stewart)
In Support of Revocation of Orders (**Matthew P. Jaffe**, Crowell & Moring LLP)

In Support of the Continuation of the Antidumping Duty Orders:

Stewart and Stewart
Washington, D.C.
on behalf of

Pacamor Kubar Bearings ("PKB")
The Timken Company ("Timken")
United Steel, Paper and Forestry, Rubber, Manufacturing, Energy, Allied Industrial and Service Workers International Union, AFL-CIO-CLC ("USC")
International Union, United Automobile, Aerospace and Agricultural Implement Workers of America ("UAW")

In Support of the Continuation of
<u>the Antidumping Duty Orders (continued):</u>

Augustine Sperrazza, Jr., Chief Executive Officer, PKB

W.J. Timken, Jr., Chairman, Timken

James W. Griffith, President and Chief Executive Officer, Timken

Robert Swinehart, President, Emerson Power Transmission Corporation

Thomas Conway, International Vice President, USW

Steve Beckman, Director, Governmental and International Affairs, UAW

Seth T. Kaplan, Vice President, Charles River Associates

Terence P. Stewart	)
Eric P. Salonen	)
Beth Argenti	) – OF COUNSEL
Patrick J. McDonough	)
Sarah V. Stewart	)

In Opposition to the Continuation of
<u>the Antidumping Duty Orders:</u>

<u>ANTIFRICTION BEARINGS:</u>

Crowell & Moring LLP
Washington, D.C.
<u>on behalf of</u>

Japan Bearing Industrial Association ("JBIA")
NSK Corporation
NSK Ltd.
NSK Europe Ltd.

Tom Rouse, President and Chief Operating Officer, NSK Corporation

David Hooser, National Account Manager, NSK Corporation

Kenneth R. Button, Vice President, Economic Consulting Services, LLC

Jim Dougan, Senior Economist, Economic Consulting Services, LLC

Matthew P. Jaffe)
Robert A. Lipstein) – OF COUNSEL
Carrie Fletcher)

Grunfeld, Desiderio, Lebowitz, Silverman & Klestadt LLP
Washington, D.C.
<u>on behalf of</u>

The Schaeffler Group

Steven L. Crow, General Counsel, Schaeffler Group USA, Inc.

In Opposition to the Continuation of
the Antidumping Duty Orders (continued):

ANTIFRICTION BEARINGS (continued):

Dieter Kuetemeier, Vice President-General Manager, North American Distribution, Schaeffler Group USA, Inc.

Charles L. Anderson, Principal, Capital Trade, Inc.

Daniel W. Klett, Principal, Capital Trade, Inc.

Max F. Schutzman)
) – OF COUNSEL
William F. Marshall)

O'Melveny & Myers LLP
Washington, D.C.
on behalf of

Nachi-Fujikoshi Corporation
Nachi America, Inc.
Nachi Technology, Inc.

Dan Nebesio, Vice President, Operations, Sales, and Marketing, Nachi Technology

Kevin J. Cuddy, International Trade Consultant, O'Melveny & Myers LLP

Greyson Bryan) – OF COUNSEL

In Opposition to the Continuation of
the Antidumping Duty Orders (continued):

ANTIFRICTION BEARINGS (continued):

Steptoe & Johnson LLP
Washington, D.C.
on behalf of

SKF USA Inc.
SKF GmbH
SKF France, S.A.
SKF Aerospace France
SKF Industries S.p.A.
SKF Aeroengine Bearings UK
Shanghai SKF Automobile Bearings
Beijing Nankou SKF Railway Bearing

Bo Bergqvist, Vice President, Finance, SKF USA Inc.

Charles L. Anderson, Principal, Capital Trade, Inc.

Daniel W. Klett, Principal, Capital Trade, Inc.

Herbert C. Shelley) – OF COUNSEL

White & Case LLP
Washington, D.C.
on behalf of

NMB Singapore Ltd.
Pelmec Industries (Pte.) Ltd.
NMB Technologies Corp. ("NMBTC")
New Hampshire Ball Bearings, Inc.

Masahiro Tsukagoshi, Vice President, Finance, NMB USA, Inc.

Roger Daun, Financial Controller, NMBTC

Frank H. Morgan) – OF COUNSEL

In Opposition to the Continuation of
the Antidumping Duty Orders (continued):

ANTIFRICTION BEARINGS (continued):

Sidley Austin LLP
Washington, D.C.
on behalf of

JTEKT Corporation
Koyo Corporation of U.S.A. ("KCU")
Caterpillar Inc.

Thomas Peacock, Trade Legal Manager, KCU

Paul Beargie, Director, Operations, KCU

Graham Fullerton, Director, Automotive Sales, KCU

Katsuhiro Takuwa, Manager, Planning &
Management Department for Overseas
Bearing Operations, JTEKT Corporation

Neil R. Ellis)
) – OF COUNSEL
Neil C. Pratt)

Baker & McKenzie LLP
Washington, D.C.
on behalf of

NTN Corporation
NTN Bearing Corporation of America
NTN-BCA Corporation
NTN Driveshaft Incorporated
American NTN Bearing Manufacturing Corporation
NTN Bower Corporation

Peter Eich, President, NTN Bearing Corporation
of America

Donald J. Unger) – OF COUNSEL

In Opposition to the Continuation of
the Antidumping Duty Orders (continued):

TAPERED ROLLER BEARINGS:

Wilmer Cutler Pickering Hale and Dorr LLP (WilmerHale)
Washington, D.C.
on behalf of

The China Chamber of Commerce for Import and Export of Machinery and Electronic Products (CCCME) and its member companies participating in these reviews

Hao Wei, Secretary General, CCCME

Cai Ming, Counsel for Legal Affairs, CCCME

Yan Libing, In-House Counsel, China General Technology (Group) Holding, Limited, (parent company of China National Machinery Import and Export Corp.)

Liu Zhizhi, In-House Counsel, China General Technology (Group) Holding, Limited, (parent company of China National Machinery Import and Export Corp.)

Tao Junbin, General Manager, Yantai CMC Bearing Company, Ltd.

Mark Liu, President, YCB International, Inc.

Bill Zhang, Marketing Manager, YCB International, Inc.

Edgar Ding, Chairman of the Board, TSB Bearings Group Co. Ltd.

Dierdre Maloney, Economist, WilmerHale

John Greenwald)
) – OF COUNSEL
Lynn Fischer Fox)

In Opposition to the Continuation of
the Antidumping Duty Orders (continued):

PURCHASERS:

Crowell & Moring LLP
Washington, D.C.
on behalf of

Delphi Corporation

Glenn R. Holder, Global Commodity Manager,
Delphi Global Supply Management

Matthew P. Jaffe) – OF COUNSEL

Grunfeld, Desiderio, Lebowitz, Silverman & Klestadt LLP
New York, NY
on behalf of

The Schaeffler Group

James Broz, Purchasing Manager, Milltronics
Manufacturing Company

Catharine Matthews, Commercial Manager,
SMW Automotive Corporation

Max F. Schutzman)
) – OF COUNSEL
William F. Marshall)

In Opposition to the Continuation of
<u>the Antidumping Duty Orders (continued):</u>

<u>PURCHASERS (continued):</u>

Sidley Austin LLP
Washington, D.C.
<u>on behalf of</u>

Caterpillar Inc. ("Caterpillar")

Gregory W. Horack, Buyer, Caterpillar

Johna Purcell, Corporate Attorney, Caterpillar

Neil R. Ellis)
) – OF COUNSEL
Maria DiGiulian)

Eaton Corporation
Cleveland, OH

Linda Tefft, Manager, Procurement, Truck Components

Timothy E. Boyle) – OF COUNSEL

Deere & Company ("John Deere")
Moline, IL

Paul Dedoncker, Supply Manager, Bearings

John W. Rauber, Jr., Director, International Affairs

<u>REBUTTAL/CLOSING REMARKS:</u>

In Support of Continuation of Orders (**Terence P. Stewart**, Stewart and Stewart)
In Support of Revocation of Orders (**Robert A. Lipstein** and **Matthew P. Jaffe**, Crowell & Moring LLP; and **John D. Greenwald**, Wilmer Cutler Pickering Hale and Dorr LLP)

APPENDIX C

SUMMARY DATA

Table C-1
Tapered roller bearings: Summary data concerning the U.S. market, 2000-05

* * * * * * *

Table C-2
Ball bearings: Summary data concerning the U.S. market, 2000-05

(Quantity=1,000 bearings, value=1,000 dollars, unit values, unit labor costs, and unit expenses are per bearing; period changes=percent, except where noted)

	Reported data						Period changes					
Item	2000	2001	2002	2003	2004	2005	2000-05	2000-01	2001-02	2002-03	2003-04	2004-05
U.S. consumption quantity:												
Amount	1,004,543	887,942	880,725	785,825	843,875	816,005	-18.8	-11.6	-0.8	-10.8	7.4	-3.3
Producers' share (1)	29.8	28.0	26.7	26.1	22.6	21.3	-8.5	-1.8	-1.2	-0.7	-3.5	-1.2
Importers' share (1):												
France (subject)	0.2	0.2	0.2	0.2	0.3	0.2	0.0	0.0	-0.0	0.0	0.0	-0.0
Germany (subject)	0.5	0.5	0.5	0.3	0.3	0.4	-0.1	-0.0	-0.0	-0.1	-0.0	0.2
Italy (subject)	0.2	0.3	0.3	0.4	0.3	0.2	0.0	0.1	0.0	0.1	-0.1	-0.1
Japan (subject)	6.6	5.9	5.4	5.5	5.6	6.6	-0.0	-0.7	-0.5	0.0	0.1	0.9
Singapore (subject)	7.4	7.1	5.6	3.9	2.2	0.9	-6.5	-0.3	-1.5	-1.7	-1.7	-1.3
United Kingdom (subject)	0.3	0.1	0.1	0.0	0.1	0.0	-0.2	-0.2	-0.0	-0.0	0.0	-0.0
Subtotal (subject sources)	15.1	14.1	12.1	10.4	8.7	8.4	-6.7	-1.0	-2.0	-1.7	-1.7	-0.3
Total nonsubject sources	55.1	57.9	61.1	63.5	68.7	70.3	15.2	2.8	3.2	2.4	5.2	1.6
Total imports	70.2	72.0	73.3	73.9	77.4	78.7	8.5	1.8	1.2	0.7	3.5	1.2
U.S. consumption value:												
Amount	2,905,077	2,581,543	2,593,399	2,478,544	2,592,238	2,742,792	-5.6	-11.1	0.5	-4.4	4.6	5.8
Producers' share (1)	67.5	67.8	67.9	67.4	63.7	63.2	-4.3	0.3	0.0	-0.5	-3.7	-0.6
Importers' share (1):												
France (subject)	0.9	1.0	0.9	0.9	1.0	0.9	-0.1	0.1	-0.1	0.0	0.1	-0.1
Germany (subject)	1.3	1.3	1.2	1.4	1.7	1.9	0.6	0.0	-0.2	0.2	0.4	0.2
Italy (subject)	0.8	0.7	1.2	1.3	1.3	0.7	-0.0	-0.0	0.5	0.1	-0.1	-0.5
Japan (subject)	9.6	9.0	7.9	7.7	8.4	9.2	-0.3	-0.6	-1.1	-0.2	0.7	0.8
Singapore (subject)	1.2	1.0	0.8	0.5	0.3	0.1	-1.1	-0.2	-0.2	-0.3	-0.2	-0.1
United Kingdom (subject)	0.4	0.4	0.3	0.3	0.4	0.4	0.0	0.0	-0.1	0.0	0.1	0.0
Subtotal (subject sources)	14.1	13.5	12.3	12.2	13.1	13.3	-0.8	-0.7	-1.2	-0.1	0.9	0.2
Total nonsubject sources	18.4	18.7	19.8	20.4	23.2	23.6	5.2	0.3	1.1	0.6	2.8	0.4
Total imports	32.5	32.2	32.1	32.6	36.3	36.8	4.3	-0.3	-0.0	0.5	3.7	0.6
U.S. imports from:												
France (subject):												
Quantity	2,026	2,198	1,912	1,881	2,110	1,669	-17.6	8.5	-13.0	-1.6	12.2	-20.9
Value	27,008	25,788	22,549	22,029	25,014	23,807	-11.9	-4.5	-12.6	-2.3	13.6	-4.8
Unit value	$12.66	$10.64	$11.03	$10.81	$10.49	$11.38	-10.1	-15.9	3.7	-2.0	-3.0	8.5
Ending inventory quantity	***	***	***	***	***	***	***	***	***	***	***	***
Germany (subject):												
Quantity	5,086	4,124	4,067	2,524	2,419	3,668	-27.9	-18.9	-1.4	-37.9	-4.1	51.6
Value	36,814	33,978	30,174	33,779	45,071	51,816	40.8	-7.7	-11.2	11.9	33.4	15.0
Unit value	$3.90	$4.80	$4.43	$6.46	$7.19	$6.56	68.4	23.2	-7.7	46.0	11.2	-8.7
Ending inventory quantity	***	***	***	***	***	***	***	***	***	***	***	***
Italy (subject):												
Quantity	2,074	2,817	2,954	3,519	2,773	1,916	-7.6	35.8	4.9	19.1	-21.2	-30.9
Value	21,813	18,559	32,185	33,417	33,321	20,556	-5.8	-14.9	73.4	3.8	-0.3	-38.3
Unit value	$9.10	$5.35	$9.80	$8.84	$11.85	$10.44	14.6	-41.2	83.0	-9.9	34.1	-11.9
Ending inventory quantity	***	***	***	***	***	***	***	***	***	***	***	***
Japan (subject):												
Quantity	66,050	52,514	47,885	42,999	47,423	53,456	-19.1	-20.5	-8.8	-10.2	10.3	12.7
Value	277,538	231,115	204,350	191,413	218,125	253,389	-8.7	-16.7	-11.6	-6.3	14.0	16.2
Unit value	$3.30	$3.56	$3.28	$3.49	$3.64	$3.75	13.6	7.9	-7.7	6.2	4.4	2.9
Ending inventory quantity	16,719	21,695	19,150	16,704	14,523	14,662	-12.3	29.8	-11.7	-12.8	-13.1	1.0
Singapore (subject):												
Quantity	74,010	62,935	49,424	30,797	18,333	7,485	-89.9	-15.0	-21.5	-37.7	-40.5	-59.2
Value	35,033	26,994	21,291	12,362	6,681	3,473	-90.1	-22.9	-21.1	-41.9	-46.0	-48.0
Unit value	$0.47	$0.43	$0.43	$0.47	$0.57	$0.90	89.5	-8.7	-0.2	9.2	20.9	57.8
Ending inventory quantity	***	***	***	***	***	***	***	***	***	***	***	***
United Kingdom (subject):												
Quantity	2,731	783	441	320	440	298	-89.1	-71.3	-43.6	-27.5	37.6	-32.4
Value	11,768	10,817	8,074	8,219	10,487	11,284	-4.1	-8.1	-25.4	1.8	27.6	7.6
Unit value	$2.32	$3.93	$4.87	$4.37	$4.08	$4.28	84.6	69.6	24.0	-10.2	-6.7	4.8
Ending inventory quantity	***	***	***	***	***	***	***	***	***	***	***	***
Subtotal (subject):												
Quantity	151,978	125,370	106,683	82,041	73,499	68,492	-54.9	-17.5	-14.9	-23.1	-10.4	-6.8
Value	409,973	347,252	318,622	301,219	338,699	364,325	-11.1	-15.3	-8.2	-5.5	12.4	7.6
Unit value	$2.16	$2.26	$2.39	$2.94	$3.59	$4.01	86.0	4.6	6.1	22.8	22.1	11.7
Ending inventory quantity	21,804	27,649	24,339	23,823	18,820	18,905	-13.3	26.8	-12.0	-2.1	-21.0	0.5
Total nonsubject sources:												
Quantity	553,312	514,317	538,501	498,979	579,959	573,486	3.6	-7.0	4.7	-7.3	16.2	-1.1
Value	534,592	483,191	514,569	506,499	601,536	646,354	20.9	-9.6	6.5	-1.6	18.8	7.5
Unit value	$0.91	$0.88	$0.89	$0.93	$0.94	$1.04	13.6	-4.0	0.9	4.7	1.8	10.1
Ending inventory quantity	42,423	90,439	32,130	66,611	148,847	245,940	479.7	113.2	-64.5	107.3	123.5	65.2
All sources:												
Quantity	705,290	639,687	645,184	581,020	653,458	641,978	-9.0	-9.3	0.9	-9.9	12.5	-1.8
Value	944,565	830,443	833,192	807,718	940,234	1,010,680	7.0	-12.1	0.3	-3.1	16.4	7.5
Unit value	$1.19	$1.15	$1.14	$1.22	$1.26	$1.37	15.7	-2.9	-1.2	7.2	2.9	9.2
Ending inventory quantity	64,227	118,088	56,469	90,434	167,668	264,846	312.4	83.9	-52.2	60.1	85.4	58.0

Table continued on next page.

Table C-2--Continued
Ball bearings: Summary data concerning the U.S. market, 2000-05

(Quantity=1,000 bearings, value=1,000 dollars, unit values, unit labor costs, and unit expenses are per bearing; period changes=percent, except where noted)

	Reported data						Period changes					
Item	2000	2001	2002	2003	2004	2005	2000-05	2000-01	2001-02	2002-03	2003-04	2004-05
U.S. producers':												
Average capacity quantity . . .	448,826	426,262	421,743	396,329	354,689	338,388	-24.6	-5.0	-1.1	-6.0	-10.5	-4.6
Production quantity	328,200	260,793	256,278	242,468	226,236	203,819	-37.9	-20.5	-1.7	-5.4	-6.7	-9.9
Capacity utilization (1)	73.1	61.2	60.8	61.2	63.8	60.2	-12.9	-11.9	-0.4	0.4	2.6	-3.6
U.S. shipments:												
Quantity	299,253	248,255	235,541	204,805	190,417	174,027	-41.8	-17.0	-5.1	-13.0	-7.0	-8.6
Value	1,960,512	1,751,100	1,760,207	1,670,826	1,652,004	1,732,112	-11.7	-10.7	0.5	-5.1	-1.1	4.8
Unit value	$6.10	$6.63	$6.95	$7.66	$8.15	$9.40	54.2	8.7	5.0	10.2	6.3	15.3
Export shipments:												
Quantity	24,966	19,394	20,687	37,421	38,811	31,262	25.2	-22.3	6.7	80.9	3.7	-19.5
Value	246,938	210,737	200,527	213,145	240,268	248,645	0.7	-14.7	-4.8	6.3	12.7	3.5
Unit value	$7.14	$7.89	$7.21	$4.08	$4.34	$5.52	-22.7	10.5	-8.7	-43.4	6.3	27.3
Ending inventory quantity	35,676	28,923	29,091	29,476	26,639	25,316	-29.0	-18.9	0.6	1.3	-9.6	-5.0
Inventories/total shipments (1)	11.0	10.8	11.4	12.2	11.6	12.3	1.3	-0.2	0.5	0.8	-0.5	0.7
Production workers	10,885	9,994	9,390	9,012	8,480	8,424	-22.6	-8.2	-6.0	-4.0	-5.9	-0.7
Hours worked (1,000s)	21,247	19,696	18,683	17,562	16,678	16,780	-21.0	-7.3	-5.1	-6.0	-5.0	0.6
Wages paid ($1,000s)	386,529	362,390	368,757	356,244	342,468	351,831	-9.0	-6.2	1.8	-3.4	-3.9	2.7
Hourly wages	$18.19	$18.40	$19.74	$20.28	$20.53	$20.97	15.3	1.1	7.3	2.8	1.2	2.1
Productivity (bearings per hou	17.2	14.6	15.2	15.4	15.2	13.5	-22.0	-15.1	3.9	1.0	-1.0	-11.5
Unit labor costs	$1.07	$1.28	$1.33	$1.35	$1.39	$1.60	48.9	19.0	3.7	2.1	2.7	15.0
Net sales:												
Quantity	338,110	279,081	263,135	252,197	230,651	205,970	-39.1	-17.5	-5.7	-4.2	-8.5	-10.7
Value	2,160,191	1,929,613	1,912,983	1,848,649	1,810,191	1,901,786	-12.0	-10.7	-0.9	-3.4	-2.1	5.1
Unit value	$5.92	$6.47	$6.80	$6.85	$7.31	$8.64	46.0	9.3	5.0	0.7	6.8	18.2
Cost of goods sold (COGS) . .	1,801,836	1,661,244	1,636,934	1,628,358	1,623,345	1,683,172	-6.6	-7.8	-1.5	-0.5	-0.3	3.7
Gross profit or (loss)	358,355	268,369	276,049	220,291	186,846	218,614	-39.0	-25.1	2.9	-20.2	-15.2	17.0
SG&A expenses	226,386	211,244	215,185	205,527	195,546	211,270	-6.7	-6.7	1.9	-4.5	-4.9	8.0
Operating income or (loss) . . .	131,969	57,125	60,864	14,764	(8,700)	7,344	-94.4	-56.7	6.5	-75.7	(2)	(2)
Capital expenditures	107,706	133,884	79,757	83,238	65,339	77,215	-28.3	24.3	-40.4	4.4	-21.5	18.2
Unit COGS	$4.97	$5.60	$5.84	$6.06	$6.61	$7.70	55.0	12.7	4.4	3.7	9.1	16.5
Unit SG&A expenses	$0.63	$0.72	$0.78	$0.78	$0.80	$0.98	54.2	13.9	8.1	-0.5	3.6	21.5
Unit operating income or (loss	$0.32	$0.16	$0.18	$0.01	($0.10)	($0.03)	(2)	-51.3	13.2	-93.2	(2)	66.6
COGS/sales (1)	83.4	86.1	85.6	88.1	89.7	88.5	5.1	2.7	-0.5	2.5	1.6	-1.2
Operating income or (loss)/ sales (1)	6.1	3.0	3.2	0.8	(0.5)	0.4	-5.7	-3.1	0.2	-2.4	-1.3	0.9

(1) "Reported data" are in percent and "period changes" are in percentage points.
(2) Undefined.

Note.--Financial data are reported on a fiscal year basis and may not necessarily be comparable to data reported on a calendar year basis. Because of rounding, figures may not add to the totals shown. Unit values (based on complete bearings) and shares are calculated from the unrounded figures; values include parts.

Source: Compiled from data submitted in response to Commission questionnaires and from official Commerce statistics.

Table C-3
Spherical plain bearings: Summary data concerning the U.S. market, 2000-05

(Quantity=1,000 bearings, value=1,000 dollars, unit values, unit labor costs, and unit expenses are per bearing; period changes=percent, except where noted)

	Reported data						Period changes					
Item	2000	2001	2002	2003	2004	2005	2000-05	2000-01	2001-02	2002-03	2003-04	2004-05
U.S. consumption quantity:												
Amount	14,452	12,842	11,963	17,639	24,873	37,130	156.9	-11.1	-6.8	47.4	41.0	49.3
Producers' share (1)	50.7	53.3	58.8	39.6	29.4	17.0	-33.7	2.6	5.5	-19.2	-10.1	-12.4
Importers' share (1):												
France	0.2	0.3	0.6	0.2	1.7	0.8	0.5	0.0	0.3	-0.4	1.5	-0.9
Total nonsubject sources	49.0	46.4	40.6	60.2	68.9	82.3	33.2	-2.6	-5.8	19.6	8.7	13.4
Total imports	49.3	46.7	41.2	60.4	70.6	83.0	33.7	-2.6	-5.5	19.2	10.1	12.4
U.S. consumption value:												
Amount	123,562	119,721	119,918	121,995	151,175	166,205	34.5	-3.1	0.2	1.7	23.9	9.9
Producers' share (1)	83.0	85.9	84.1	81.1	75.7	68.7	-14.4	2.9	-1.9	-2.9	-5.4	-7.0
Importers' share (1):												
France	1.3	0.6	0.4	0.4	1.2	0.6	-0.6	-0.7	-0.2	0.0	0.7	-0.5
Total nonsubject sources	15.7	13.5	15.5	18.4	23.1	30.7	15.0	-2.2	2.0	2.9	4.7	7.5
Total imports	17.0	14.1	15.9	18.9	24.3	31.3	14.4	-2.9	1.9	2.9	5.4	7.0
U.S. imports from:												
France (subject):												
Quantity	36	35	69	31	413	280	684.3	-2.2	97.6	-55.3	1241.5	-32.3
Value	1,562	659	476	545	1,764	1,046	-33.0	-57.8	-27.7	14.5	223.3	-40.7
Unit value	$43.84	$18.88	$6.91	$17.70	$4.27	$3.74	-91.5	-56.9	-63.4	156.3	-75.9	-12.4
Ending inventory quantity	***	***	***	***	***	***	***	***	***	***	***	***
Total nonsubject sources:												
Quantity	7,089	5,961	4,859	10,627	17,140	30,543	330.9	-15.9	-18.5	118.7	61.3	78.2
Value	19,383	16,169	18,620	22,469	34,983	50,988	163.1	-16.6	15.2	20.7	55.7	45.8
Unit value	$2.73	$2.71	$3.83	$2.11	$2.04	$1.67	-38.9	-0.8	41.3	-44.8	-3.5	-18.2
Ending inventory quantity	***	***	***	***	***	***	***	***	***	***	***	***
All sources:												
Quantity	7,124	5,996	4,928	10,658	17,553	30,823	332.6	-15.8	-17.8	116.3	64.7	75.6
Value	20,945	16,828	19,097	23,014	36,747	52,034	148.4	-19.7	13.5	20.5	59.7	41.6
Unit value	$2.94	$2.83	$3.90	$2.16	$2.09	$1.69	-42.6	-4.0	38.1	-44.6	-3.0	-19.4
Ending inventory quantity	241	240	207	220	250	336	39.5	-0.3	-13.7	6.3	13.4	34.4
U.S. producers':												
Average capacity quantity	11,159	10,857	10,606	10,689	11,003	10,285	-7.8	-2.7	-2.3	0.8	2.9	-6.5
Production quantity	7,519	7,343	7,316	7,240	7,792	6,644	-11.6	-2.3	-0.4	-1.0	7.6	-14.7
Capacity utilization (1)	67.4	67.6	69.0	67.7	70.8	64.6	-2.8	0.3	1.3	-1.2	3.1	-6.2
U.S. shipments:												
Quantity	7,328	6,846	7,035	6,981	7,320	6,307	-13.9	-6.6	2.8	-0.8	4.9	-13.8
Value	102,617	102,893	100,821	98,981	114,428	114,171	11.3	0.3	-2.0	-1.8	15.6	-0.2
Unit value	$13.92	$14.92	$14.24	$14.10	$15.54	$18.01	29.4	7.1	-4.5	-1.0	10.2	15.9
Export shipments:												
Quantity	***	***	***	***	***	***	***	***	***	***	***	***
Value	***	***	***	***	***	***	***	***	***	***	***	***
Unit value	***	***	***	***	***	***	***	***	***	***	***	***
Ending inventory quantity	1,878	2,027	1,843	1,834	1,999	1,968	4.8	7.9	-9.1	-0.5	9.0	-1.6
Inventories/total shipments	***	***	***	***	***	***	***	***	***	***	***	***
Production workers	***	***	***	***	***	***	***	***	***	***	***	***
Hours worked (1,000s)	***	***	***	***	***	***	***	***	***	***	***	***
Wages paid ($1,000s)	***	***	***	***	***	***	***	***	***	***	***	***
Hourly wages	***	***	***	***	***	***	***	***	***	***	***	***
Productivity (bearings per h	***	***	***	***	***	***	***	***	***	***	***	***
Unit labor costs	***	***	***	***	***	***	***	***	***	***	***	***
Net sales:												
Quantity	7,757	7,104	7,382	7,239	7,508	6,619	-14.7	-8.4	3.9	-1.9	3.7	-11.8
Value	120,166	110,211	113,122	107,320	118,975	123,486	2.8	-8.3	2.6	-5.1	10.9	3.8
Unit value	$15.49	$15.51	$15.32	$14.83	$15.85	$18.66	20.4	0.1	-1.2	-3.3	6.9	17.7
Cost of goods sold (COGS)	93,529	85,136	89,015	86,745	97,869	95,694	2.3	-9.0	4.6	-2.6	12.8	-2.2
Gross profit or (loss)	26,637	25,075	24,107	20,575	21,106	27,792	4.3	-5.9	-3.9	-14.7	2.6	31.7
SG&A expenses	16,403	15,680	15,448	15,224	15,696	15,955	-2.7	-4.4	-1.5	-1.5	3.1	1.7
Operating income or (loss)	10,234	9,395	8,659	5,351	5,410	11,837	15.7	-8.2	-7.8	-38.2	1.1	118.8
Capital expenditures	6,146	3,296	4,889	7,297	1,060	4,119	-33.0	-46.4	48.3	49.3	-85.5	288.6
Unit COGS	$12.06	$11.98	$12.06	$11.98	$13.04	$14.46	19.9	-0.6	0.6	-0.6	8.8	10.9
Unit SG&A expenses	$2.11	$2.21	$2.09	$2.10	$2.09	$2.41	14.0	4.4	-5.2	0.5	-0.6	15.3
Unit operating income or (lo	$1.32	$1.32	$1.17	$0.74	$0.72	$1.79	35.5	0.2	-11.3	-37.0	-2.5	148.2
COGS/sales (1)	77.8	77.2	78.7	80.8	82.3	77.5	-0.3	-0.6	1.4	2.1	1.4	-4.8
Operating income or (loss)/ sales (1)	8.5	8.5	7.7	5.0	4.5	9.6	1.1	0.0	-0.9	-2.7	-0.4	5.0

(1) "Reported data" are in percent and "period changes" are in percentage points.

Note.--Financial data are reported on a fiscal year basis and may not necessarily be comparable to data reported on a calendar year basis. Because of roundi figures may not add to the totals shown. Unit values (based on complete bearings) and shares are calculated from the unrounded figures; values include parts

Source: Compiled from data submitted in response to Commission questionnaires and from official Commerce statistics.

APPENDIX D

COMMENTS ON THE SIGNIFICANCE OF THE EXISTING ANTIDUMPING DUTY ORDERS AND THE LIKELY EFFECTS OF REVOCATION

U.S. PRODUCERS' COMMENTS

The Commission requested U.S. producers to describe any anticipated changes in their operations or organization relating to the production of certain bearings in the future if the existing antidumping duty orders were revoked. (Question II-4)

The following firms responded "No": ***.

***

N/A

***

No response.

***

TRBs – "No. None."

BBs – "No. *** would not expect any of its business projections or investment plans to change or be altered if the antidumping duty orders for BBs from various countries were revoked."

SPBs – N/A

***

TRBs – "Not applicable."

BBs – "Yes. We do not have business plans that address this issue but as stated in II-19 believe that revoking would substantially disrupt the market thus impact our employment and investment in P.P. & E."

SPBs – "Would not be a significant event."

***

TRBs and **SPBs** – N/A

BBs – "No. Although revocation of the order would not lead to any significant changes in ***'s operations and organization, its continued imposition would continue to inhibit ***'s ability to compete fairly with *** and thus its long-term ability to meet its customers' needs. Specifically, in those instances when customers (often the AM or smaller OEM customers) require certain bearing models in limited quantities or to technical specifications that may not be produced on the equipment of ***'s manufacturing division, *** to complement its domestic production. This practice is consistent with the general trend in the BB industry to rationalize global production. To the extent that the antidumping order restricts ***'s ability to compete fairly with other domestic producers that are not subject to the AD order and to complement its domestic production, it serves to distort the efficient functioning of the market place and to encourage

bearing-consuming industries located in the United States to shift production to other countries in which they can obtain their bearings without trade related restrictions."

***

TRBs and **SPBs** – No response.

BBs – "Yes. We would lose more business than we have already lost to China. We have lost about ***%/year for the past few years because of China."

***

TRBs and **SPBs** – N/A

BBs – "No. *** would not expect any of its business projections or investment plans to change or be altered if the antidumping duty orders for BBs from various countries were revoked."

***

TRBs and **SPBs** – N/A

BBs – "Yes. Ongoing revenue and margin erosion due to impact of bearings imported from lower labor cost regions could be expected to accelerate."

***

TRBs – "Yes. We expect there will be more products imported and it will definitely take some of our market share we are currently serving."

BBs – "Evaluating the possibility of closure of ***."

SPBs – N/A

***

TRBs – "*** estimates that by the end of 2008, revocation of the orders could result in lost revenue of as much as $*** and result in a loss of some *** jobs and the equivalent of *** bearing plants being closed. Set forth below is a table we used to determine effects for ***. We used average costs and average sales to arrive at average revenues produced ***.

* * * * * * *

We believe *** are particularly vulnerable to increased imports from China. These *** make TRBs that are of the size and dimension that overlap substantially with the product we see coming in from China.

It is important to note that dumped imports from China need not increase so much as to displace the output of ***. Once capacity utilization falls below a certain level, the cost of running a line becomes prohibitive and the line is shut down, which carries with it the loss of all revenue associated with output from that line."

BBs and **SPBs** – "Should the subject ball bearing and spherical plain bearing orders be revoked, we would anticipate curtailment of production ***, with outright closure ***. Continued dumping and import pricing pressure over the life of the orders has eroded the full relief that was intended and has contributed to unsustainable losses at several of the company's ball bearing facilities, for example: ***. This contraction of the company's ball bearing operations during a time period in which the orders have been in place is telling of the magnitude of the injury that will ensue if the orders are removed. The vulnerability of the domestic ball bearing industry has also been exacerbated by surges in low-priced imports from China (with close to a $40 million increase between 2003 and 2004 alone.)

Since 2000, we have already had to reduce our prices for ball bearings and spherical plain bearings between *** percent. For ***'s sales of ***. If the orders are revoked, we would expect, among other things, a decline in our prices of an additional *** percent as we fight to maintain market share. This would cause large portions of our production to become unprofitable as well as prohibit reinvestment.

On Ball Bearings in Particular:

We expect that we would continue to lose our high volume part number business for farm equipment. This business, which includes ***. Since 2000, ball bearing sales at *** have declined due to continuing dumping and pricing pressures from subject foreign producers such as SKF, INA/FAG, Koyo, and NTN. See attached certified statement of ***. This price competition has been exacerbated with increases in low-priced imports from China. Id.

The magnitude of ***'s lost sales volume at *** customer accounts such as *** will be amplified if the orders are revoked, as these customers are currently seeking out additional low-priced suppliers such as INA/FAG and SKF for both critical and non-critical applications. See attached certified statement of ***. Importantly, in the last six months, INA/FAG, a German manufacturer, has been aggressively pursuing ***. Id. Without the antidumping orders on ball bearings, there will be nothing to stop INA/FAG from seeking market share with further price aggression. Id.

These examples illustrate the significant price competition in the domestic ball bearing market – with the orders in place. Without the pricing disciplines of the orders, *** would need to further reduce production at ***. See attached certified statement of ***.

Another *** in danger for the same reasons is ***. Close to *** of ***'s sales of *** ball bearings go through distributors, which exposes *** of ***'s business to intense price competition. See attached certified statement of ***.

In addition to competition in the aftermarket, ***'s prices for *** ball bearings are under pressure at its OEM accounts as well. For example, at *** is competing for business with major foreign and domestic suppliers of bearings such as Nachi, SKF, NSK and INA/FAG, and Barden. See certified statement of ***. Price competition is particularly acute at this account since ***, but typically only awards the business to the lowest-priced supplier. Id. If the orders are revoked, *** expects that $*** in sales are at risk for its *** product line at its OEM accounts, and another $*** in sales are at risk in the aftermarket. See certified statement of ***.

In sum, if the orders are revoked, an increase in dumped imports would exacerbate already declining sales, and also force prices down to unsustainable levels. Together, this will cause our

revenues to plummet and will restrict the company's ability to maintain its existing ball bearings operations in the United States.

The above expectations are based on the fact that prior to the orders, import surges of dumpedball bearings from the subject countries and others forced 30 factories in U.S. to close, with a loss of 14,000 jobs. While the company does not have any written plans to address the adverse effects of revocation of the orders, management is considering alternatives such *** in order to effectively compete.

On Spherical Plain Bearings in Particular:

For SPBs in particular, we expect that removal of the order would have significant adverse effects on our operations, with ***. As it is, ***'s SPB sales have been declining by volume and value since 2000, when the orders on SPBs from Japan and Germany were revoked. Since 2000, we have *** to remain competitive vis-à-vis imports, including ***.

It is worth noting that Japanese and German respondents contended during the first sunset review that revocation of the orders on imports of SPBs from those countries was unlikely to result in significant increases in import volumes. In fact, imports from each country have increased substantially during the review period. In the case of Japan, import volumes have increased from 2.9 million units in 2000 to more than 13 million units in 2005 while the value of imports has increased some 34 percent during the same period. (When compared to 1998, the last full year of the Commission's period of review in the first sunset review, imports from Japan in 2005 were nearly 50 percent higher by value.) Imports of SPBs from Germany have increased even more dramatically since the order was revoked, from $3.07 million in 2000 to $15.159 million in 2005."

***

TRBs and **SPBs** – No response.

BBs – "Yes. Our business strategy has been to increase revenues to a point, ***. To do this we needed to make significant investments to ***.

Because of severe pricing competition from our foreign competitors, we have experienced a continuing erosion in sales of *** ball bearings that prompted us to accelerate our plans with regard to this shift in business focus. We therefore made the improvements and *** discussed above. The success of these plans, however, is contingent upon the orders staying in place as they have provided much-needed pricing and import relief, even though continued dumping over the years has diminished ***'s ability to realize the full magnitude of the relief the orders were intended to provide. The funds *** has received under CDSOA have helped offset the fact that the company is still under tremendous pricing pressure from foreign competitors. These funds have helped *** to begin courting these more profitable accounts and, combined with the relief from the antidumping duty orders, have enabled *** to survive.

Having experienced bankruptcy because of the original dumping of the subject bearings, we are all too familiar with the consequences that will result if the orders are removed and dumping intensifies. *** is at least several years away from penetrating *** discussed above. Without the orders, *** will have to either severely curtail its business plans or cease operations altogether."

The Commission requested U.S. producers to describe the significance of the existing antidumping duty orders on their production capacity, production, U.S. shipments, inventories, purchases, and employment. (Question II-19)

***

No response.

***

N/A

***

No response.

***

TRBs – "The ADD order covering imports of TRBs from China does not affect ***'s production capacity, production, U.S. shipments, inventories, purchases, employment, revenues, costs, profits, cash flow, capital expenditures, research and development expenditures, or asset values."

BBs – "The ADD orders covering imports of BBs from France, Germany, Italy, Japan, Singapore and the United Kingdom does not affect ***'s production capacity, production, U.S. shipments, inventories, purchases, employment, revenues, costs, profits, cash flow, capital expenditures, research and development expenditures, or asset values."

SPBs – N/A

***

TRBs – "We do not manufacture tapered roller bearings, but buy them to incorporate in ***."

BBs – "We firmly believe that if the anti-dumping order is lifted that the U.S. market would be flooded with dumped bearings from subject countries. The magnitude of dumping duty dollars collected today is proof of these companies willingness to sell at artificially low prices to capture U.S. market share.

The manufacture of bearings is a very capital-intensive industry. Given that companies in subject countries have already facilitized to manufacture these products any additional sales volumes that they make and sell above their variable cost contributes to their profits. Therefore they have an obvious incentive to dump product in the U.S. market.

Although we manufacture bearing types other than just "certain bearings" if we lost significant volumes of "certain bearings" it would effect our competitiveness in the other bearing types. Many costs such as engineering, administration, and sales and marketing are shared over multiple product types. If volumes of "certain bearings" are reduced and these costs cannot be cut

proportionately one then becomes non competitive in other product lines and eventually unable to remain a viable manufacturer."

SPBs – We***."

***

TRBs and **SPBs** – N/A

BBs – "The AD order on BBs has not been a major consideration underlying ***'s production capacity, production, home market shipments, inventories, purchases, employment, revenues, costs, profits, cash-flow, capital expenditures, R&D expenditures or assets value. Production and sales decisions are based on the supply and demand conditions in individual BB markets worldwide. Over the last few decades, ***. As a result, although ***'s BB production capacity and production quantities have decreased, the total value of ***'s shipments has remained steady as *** increased the per-unit-value of the BBs that it produces and sells. In turn, ***'s production now accounts for over *** percent (by value) of the bearing products sold by *** in the United States. In other words, as domestic and worldwide demand has increased for *** BBs, so has ***'s production and sales.

The nature of the bearings industry lends itself to the development of long-term relationships between *** and its customers. In *** markets, the large majority of ***'s customers require that they certify *** producing that customer's bearings prior to shipment. The certification process can take a year or longer, as certain prerequisites must be satisfied. For example, customers generally require that *** allow them to inspect its factories, production lines and end products. In addition, customers must approve bearing designs and performance, and perform testing and trial runs. These certification requirements limit ***'s ability to ***. Moreover, customers are hesitant to change suppliers as the certification process requires a significant investment of time and resources.

In addition, in the intervening years since the imposition of the AD order, *** has increased its production of customized bearings (i.e., bearings developed and produced to individual customer specifications and for specific applications), such that customized bearings now account for *** percent of ***'s U.S. production. The development of customized BB models is a lengthy process, involving significant engineering and human resources. Due to the difficulty and time involved in the certification process, particularly in the design and development process of customized BB models, BB producers forge close relationships with their customers that neither party will readily abandon. Finally, once a bearing supplier is selected by a customer through the "bid process" to supply a particular bearing model, it becomes the primary supplier of that product to that customer. Incumbent suppliers in turn are generally given the first option to bid on future product developments for a given application. As a result of the certification process and the growth of demand for customized bearings, *** has developed long-standing, strong relationships with its customers, entirely unrelated to the U.S. AD order on BBs, relationships neither party will easily forsake.

*** before the order was in place. Thus, although the AD order may have been one factor encouraging ***. As described above, *** has focused over the last five years on producing and selling customized bearings. In turn, ***'s production capacity and production quantities have decreased over that period, but the total value of ***'s shipments has remained steady as *** increased the per-unit-value of the BBs that it produces and sells. Currently, given factors such as *** regardless of the AD order. ***'s BB business has been, and will continue to be, governed by customer demands and economic conditions, not the AD order."

***

TRBs and **SPBs** – N/A

BBs – "Minor significance; *** (ball bearings)."

***

TRBs and **BBs** – "As *** bearings we noticed bearing companies from the affected countries created some new production capacity in the U.S. This enlarged the available market for our product sales into the late 1990's when bearings imported from China have hurt domestic bearing production."

SPBs – N/A

***

TRBs and **SPBs** – N/A

BBs – "The ADD orders coverings imports of BBs from France, Germany, Italy, Japan, Singapore and the United Kingdom does not effect ***'s production capacity, production, U.S. shipments, inventories, purchases, employment, revenues, costs, profits, cash flow, capital expenditures, research and development expenditures, or asset values."

***

TRBs – "The existence of the antidumping orders does not have significant impact on U.S. production of TRBs."

BBs – "The *** make their production, shipment, inventory, purchase, and employment decisions primarily based on market factors that are independent of the existing antidumping duty orders covering imports from certain bearings from the subject countries. These factors include the increase in demand of bearings as a result of the increased demand for specialized, sophisticated, and differentiated product design, e.g., the aerospace industry; customers' preference for just-in-time deliveries; and adherence to NAFTA and similar rules. However, the antidumping duty orders have been harmful to the U.S. ball bearing industry

because they have inhibited the ability of companies in the U.S. to import to compliment. As a result, *** is less competitive with respect to customers who require that *** provide them with a full range of their bearing needs. Thus, there would be a negative impact on ***'s U.S. production when *** loses sales for this reason."

SPBs – No response.

***

"No significance."

***

TRBs – No response.

BBs – "We have started our BBs *** production in *** and increased production based on our customers' requirement through *** when our production reached peak capacity. In *** production started phasing out and currently we are producing only at ***% of peak capacity. The main reason is that our U.S. customers have lost their competitiveness in this market and have shifted their production to other countries such as China, Indonesia, Taiwan & etc. Now we are losing our customers who have commitments to have their parts assembled in the U.S."

SPBs – N/A

***

TRBs and **SPBs** – N/A

BBs– "Overall production levels, as well as the value per unit of *** ball bearing product segment have eroded steadily during the period of analyses. Imported bearings and bearing components have contributed to this erosion. While difficult to quantify, it is likely that antidumping orders have favorably impacted the pace of our business decline."

***

"Existing orders have no impact on our business."

***

TRBs and **SPBs** – N/A

BBs – "Prior to the onset of injurious dumping of ball bearings in the mid eighties, ***'s average selling price for *** bearings was $*** each. Surges of dumped imports forced our prices down to $*** each, seriously eroding our profitability. In fact, this period of dumping forced our Company to ***. Following imposition of the orders, the Company's average selling price recovered to pre-order levels. The pricing and

import relief allowed the Company to ***. Continued dumping over the life of the orders, however, has kept tremendous pricing pressure on the Company, which has precluded us from increasing our capacity utilization and has impeded our profitability. But for the orders, however, the Company ***."

***

TRBs and **SPBs** – No response.

BBs – "I have no idea."

***

TRBs and **SPBs** – "Does not apply."

BBs – "No effect on our *** bearing segment."

***

TRBs and **SPBs** – "Not applicable."

BBs – "The antidumping duty orders on ball bearings from France, Germany, Italy and the United Kingdom currently have no impact on the U.S. production of ball bearings. Since the imposition of the antidumping order, ***. While in the early years of the antidumping order (when dumping margins were high), trade flows and sourcing decisions may have been affected by the orders themselves, this has not been the case for several years, for a number of reasons. First, other economic factors, such as relative labor rates, proximity to markets, rationalization of production, and customer preference or requirements for local production, are far more important determinants of where to manufacture ball bearings than potential antidumping duties. The U.S. is an especially attractive manufacturing location for products sold to automotive and aerospace markets, because of local content requirements, and product traceability requirements for reasons of product liability. Moreover, compared to most of Europe, the U.S. has relatively low labor and energy costs.

*** manufacturing configuration has evolved to the point that imports of product from the covered countries are limited primarily to custom products that cannot be manufactured elsewhere. This change reflects the long-term shifts to emerging countries for commodity bearings, and local production for custom product that is sold in volume."

***

TRBs and **SPBs** – No response.

BBs – "Yes. The AD order on BBs prevents *** from complementing our U.S. production with a broader range of BBs from imported sources. Prior to AD duty imposition, *** estimates that ***% of our sales consisted of imported bearings. The inability to offer a broader

product line to our customers has impacted ***'s sales and, in turn, our U.S. production of BBs."

***

TRBs – "The antidumping order on TRBs from China has had beneficial effects, including restraining the volume and value of subject imports and imposing much-needed pricing disciplines. As a result, *** has been able to improve profitability and make necessary investments in its TRB operations. *See* Question II-2 (listing investments/improvements in operations between 2000 and 2005). For 2006, Timken already has plans to invest $***. *** also has plans to invest $***. These types of investments would not be possible without the pricing and import relief of the subject order on TRBs from China.

While imports of TRBs from China have increased over the life of the order, there can be little doubt that the subject antidumping order has prevented surges of dumped product at a much greater magnitude. This is best illustrated by a comparison of imports of TRBs by value from China and Japan since the first sunset review (when the order on TRBs from Japan was revoked).

Comparison of Imports of TRBs from China and Japan ($1,000)							
	1999	**2000**	**2001**	**2002**	**2003**	**2004**	**2005**
China (subject)*	37,549	29,783	25,224	33,381	32,897	45,720	70,471
Japan (non-subject since 2000)	66,633	62,349	55,123	74,182	117,568	157,205	198,275

*** recognizes, of course, that three Chinese producer-exporters are not subject to the order, having been revoked. *** is unaware of any public information concerning these producer-exporters' exports.

The above chart shows that once the antidumping duty order on TRBs from Japan was revoked, imports soon thereafter began increasing by value at a much faster pace than imports from China, which remain subject to the discipline of the order. In that regard, it is worth recalling that during the first sunset review, Koyo, NTN, and NSK (the JBIA companies) asserted that "even if the orders are revoked, Japanese companies will not be able to supply a substantial portion of their customers from Japan and will continue to expand investment and production in the United States." *Foreign Producers' Pre-hearing Br.* at p. 14 (public version) (March 10, 2000.). Once the order was revoked, however, imports significantly increased.

There is every reason to believe the same behavior would result if the order on TRBs from China

was revoked, as all of the major multinational TRB producers have established operations in China and are poised to respond to revocation of the order on TRBs from China with increased imports. None of these major producers were investigated and assigned their own rate in the underlying original investigation or administrative reviews of the order on TRBs from China; thus, if they want to export to the U.S. they are subject to the high "all others" rate of 60.95 percent. If the order was revoked, however, these companies (who already have long-established relationships with distributors and OEMs in the U.S.), would have every incentive to increase their exports of TRBs to the U.S. at dumped prices in order to gain market share. Some of these producers have even announced recent expansions in TRB capacity in China:

1. Koyo announced that Koyo Automotive Parts (Wuxi) Co. Ltd. was established in China in January of 2005 for the manufacture of TRBs. *See* Koyo Website (Company History) *available at* http://koyo-seiko.co.jp/english

2. SKF Automotive Bearing Co.,Ltd (SKF ABC), which already has a TRB grinding and assembly line, announced in April of 2005 that it will be adding capacity to include a new channel for hub bearing units. *See* SKF Website, News Releases (Apr. 5, 2005). SKF also has a joint venture in China called "Beijing Nankou SKF Railway Bearings Co. Ltd.," which produces tapered bearing units. *Id.*

The foregoing, of course, is in addition to the numerous Chinese-owned producers that also remain subject to the order and would look to increase their production and shipments to the U.S. market if the order is revoked. In that regard, subject Chinese producers have been adding capacity and increasing production since 2000. For example, Peer Bearing announced that at its Changshan tapered roller bearing plant in China "production capacity has been expanded rapidly in the last few years to meet strong customer demand." See http://www.peerbearing.com/pdf/press_releases-ads-awards.pdf. In the first sunset review, the Commission found that subject producers of TRBs had excess capacity available and would be likely to direct a significant portion of that capacity to the U.S. market if the order was revoked. *See* USITC Pub. 3309 at 22, 26-27. As those same subject producers have increased capacity since the first sunset review, it is even more likely that they will respond to revocation with significant increases in dumped imports into the U.S. market.

Moreover, according to information from the China Bearing Industry Association, there are approximately 3,000 producers of antifriction bearings including tapered roller bearings in China, many of which would likely increase exports to the U.S. if the order was revoked and they were no longer subject to the high "all others rate."

When all of the above factors are considered as a whole, the significance of the antidumping duty order on TRBs from China is underscored because it has prevented the addition of new capacity by the multinationals, the subject producers, and new producers from surging into the U.S. market. However, it also means that if the order is revoked, there is even more capacity than in the first sunset review that is likely to be directed to the U.S. market."

BBs and **SPBs** –

"I. ***'s Production, Shipments, Employment, etc. Before the BB and SPB Orders Were Imposed

In order to remain competitive before the order, we were forced to ***. On other items, we stopped production altogether. Moreover, in the case of ***, for example, we were unable to justify investment because of depressed prices. Pricing pressure from imports so reduced our profitability that we were forced to ***.

Pre-order declines in production, shipments and employment are well documented in the Commission's 1989 affirmative material injury determination (USITC Pub. 2185):

1. Ball bearings (pages 45-48): from 1985 to 1987 production declined, capacity declined, shipments declined, employment declined.

2. Spherical plain bearings (pages 57-58): from 1985 to 1987, production declined, capacity utilization declined, shipments declined.

II. ***'s Production, Shipments, Employment etc. After the Orders on BBs and SPBs Were Imposed

After the orders were imposed, ***'s revenues and profitability dramatically improved. For example, gross profit on sales of ball bearings improved from ***. This improvement in profitability was attributable in part to improved prices. For example, after the orders were imposed, prices for ball bearings and spherical plain bearings increased overall by approximately ***% (some higher), and we regained sales volume.

For certain bellwether ball bearing products, prices improved as follows:

1. ***.

***'s sales improved following the orders as well. For example, ***'s sales of ball bearings in 1989 increased by nearly ***%. The orders also resulted in a *** percent increase in ***'s domestic shipments in 1989 and an increase in wages paid to production workers.

Capital expenditures for machinery, equipment and fixtures related to the production of ball bearings increased nearly *** percent between 1988 and 1990. Once the orders were imposed, we were able to invest more than $*** into the company between 1988 and 1991. This massive investment was designed to reduce costs, improve quality and increase capacity.

For example:

1. The pricing relief provided by the subject orders enabled the company to invest $***. Specifically, the investment ***. Capacity increased from *** million units per year to *** units per year.

2. The orders also allowed us to invest $***. Production capacity expanded from *** units per year to *** units per year. The improved processing methods from this capital investment allowed us to operate with lower inventories. There were additional investments in connection with the production of ***. Over ten years, our total investment ***.

3. We invested $*** due in large part to import competition, including competition from subject imports that continued to be sold at dumped prices and increased volumes of low-priced imports from China.

4. We invested $***.

The above-described massive increase in investment by *** was mirrored by other domestic bearings producers and recognized in a study performed for the Department of Defense:

Total Bearing Industry Capital Investments ($ million)

1986	1987	1988	1989	1990	1991
Plant	15.2	11.6	18.9	18.8	41.2
Equipment	65.9	73.2	94.4	145.4	155.5
Other	10.0	17.9	28.2	27.2	31.6
Total	92.0	102.0	141.5	191.4	228.3

Source: An Assessment of the Economic Status of the Antifriction Bearing Industry, Donna J. Peterson, Gerald T. Kelley, Myron G. Myers, Table A6, page A-14.

The investments made by domestic producers following the imposition of the orders greatly expanded production capacity. Regular precision ball bearing capacity increased nearly 50 percent from 1987 to 1991. See Department of Commerce, Office of Industrial Resource Administration, National Security Assessment of the Antifriction Bearing Industry (February 1993) (OIRA Report) at 12. In the 30-100mm category, capacity in the U.S. increased 74%. OIRA Report at 13.

Finally, the orders also allowed *** to drastically reduce its reliance on ***.

III. ***'s Production, Shipments, Employment etc. Today

While *** has continued to make investments in its ball bearing operations throughout the life of the orders, the level of investment has been curtailed as a result of uninterrupted dumping by the subject producers. Since 2000, for example, ***'s capital expenditures related to ball bearings have declined. See Table III-10. Thus, although the orders have provided pricing and import relief, the full effects of the relief have been eroded over time. As explained more fully in the answers to Questions II-4 and II-20, ***'s BB and SPB operations have continued to come under substantial pricing pressure from the subject producers even with the orders in place. This has contributed to ***. Moreover, the initial increase of *** percent in ***'s prices following the

initial imposition of the orders, as discussed above, has since been reversed due to low-priced competition from subject producers as well as producers in China and elsewhere. Since 2003, there has been close to a $40 million increase by value in imports of ball bearings from China, which has had the effect of keeping prices depressed.

Despite the fact that the full benefits of the orders have been diminished as a result of continued dumping, there is no doubt that *** would be far worse off today without the pricing disciplines and import relief that the orders have provided.

ADDITIONAL COMMENTS ON Spherical Plain Bearings

The subject antidumping order on SPBs from France, and the orders on SPBs from Japan and Germany prior to revocation in 2000, helped curtail unfairly priced imports from continuing to flood the U.S. market. The effects of those orders on our revenues, costs, profits, cash flow, capital expenditures, research and development expenditures, and asset values has been significant, and were reported in great detail to the Commission in December 1994, in the context of its investigation on the effects of the antidumping orders. The effect was also reported in Commerce's Section 232 national security investigation.

Since the Commission's negative determinations and revocation of the antidumping orders on SPBs from Germany and Japan in 2000, the U.S. market has seen a significant increase in imports combined with significant declines in the average unit values of SPBs formerly subject to antidumping orders. In the case of Japan, import volumes have increased from 2.9 million units in 2000 to more than 13 million units in 2005 while the value of imports has increased some 34 percent during the same period. (When compared to 1998, the last full year of the Commission's period of review in the first sunset review, imports from Japan in 2005 were nearly 50 percent higher by value.) Imports of SPBs from Germany have increased even more dramatically since the order was revoked, from $3.07 million in 2000 to $15.159 million in 2005. Coincident with the increases in imports of SPBs from Germany and Japan following revocation of the orders in 2000, our sales of SPBs declined by almost 30 percent. The continuation of the order on SPBs from France has helped mitigate the magnitude of these declines."

***

"The existing antidumping duty orders have had no significant effect on ***'s production capacity, production, shipments or inventories, etc."

***

TRBs – N/A

BBs and **SPBs** – "The existing antidumping duty orders on european bearing imports have had a favorable impact on *** production capacity, production, US Shipments, inventories, purchase, employment, revenues, costs, profits, cash flow, capital expenditures, R&D expenditures and asset values in so far as they have limited/deterred european bearing imports which in some cases compete directly against existing product offerings. They've had no impact on *** in so far as they relate to bearings imported from ***."

The Commission asked U.S. producers whether they anticipated changes in their production capacity, production, U.S. shipments, inventories, purchases, or employment relating to the production of certain bearings if the antidumping duty orders were revoked. (Question II-20)

The following firms responded "No": ***.

***

No response.

***

N/A

***

No response.

***

TRBs and **SPBs** – N/A

BBs – "As explained above, the AD order on BBs has had no significant effect on capacity, production, U.S. shipments, exports, inventories, etc. Instead, customer demand continues to be the primary impetus driving such developments. For example, ***'s production capacity has changed over the last five years from a mix of high volume, standard models and lower volume, high-end custom models to almost exclusively the latter. This change occurred not as a result of the AD order, but because of ***'s decision to focus on producing and selling the higher performance customized BBs sought by its customers. Because consumer demands drive ***'s business decisions and because *** does not anticipate that those demands will change if the AD order on BBs is revoked, ***'s production and marketing strategies are not likely to change. Over the last five years, *** invested significant capital and other resources to *** intend to make additional substantial investments in ***'s facilities over the next few years. These investments are consistent with ***'s ongoing commitment to expand its ability to supply the U.S. market from its local production facilities. *** has made these additional investments despite the AD order, and despite the uneven playing field created by the Byrd Amendment, whereby certain U.S. BB producers are able to expand their operations (even those operations located abroad), with monies paid by other U.S. BB importers and producers in antidumping duties."

***

TRBs – "Yes. *** has grave concerns about what will happen to its tapered bearing business if the antidumping duty order is revoked because of the effects that increased dumping would have. These concerns flow from continued dumping throughout the life of the order. Likewise, there is still excess global capacity for tapered roller bearings, particularly in China. These factors have put downward pressure on ***'s profitability.

Current marketing and pricing pressures from competitors would only be exacerbated by a revocation of the order. Our projections would be that we would be faced with immediate price pressures of at least ***%. Importantly, increases in imports from China into the aftermarket

would also have adverse price effects for standard products sold into both OEM and aftermarket as OEM customers would demand that their prices for the same products be reduced commensurate with price reductions in the aftermarket. Further, what might be called "commodity" applications/uses would become targets for Chinese imports in both OEM as well as aftermarket. There are some applications in the marketplace where we would lose any remaining business we currently enjoy, namely the *** market. This was once a US dominated application that is now supplied almost entirely by Chinese manufacturers.

Ultimately, demand for U.S. made product would be reduced. Production capacity would be reduced or even idled as demand for our product lessens. This would require us to reduce employment levels in the U.S. since shipments would get reduced. Even though we have pricing agreements with our customers, *** have escape-type clauses whereby if any "substantial" price discounts are offered by competitors, and we cannot meet them, our customers have the right to switch bearing suppliers. These clauses make *** extremely vulnerable to the lower prices of dumped imports from China that would come to the U.S. if the order is revoked.

The projected effects of the lost sales are profoundly disturbing. *** estimates that it would lose substantial sales and suffer substantial price erosion should the antidumping duty order on TRB's imported from China is revoked. With the projected decline in sales, *** would likely undergo downsizing of its operations. *** would subsequently have to reduce its capacity, production, inventories and purchase amounts equivalent to balance with a loss in sales revenue. Profits would likely disappear or become negligible which in turn would severely limit the amount of capital investments we could make. Also, spending for Research & Development would be adversely affected as well. Over time, these actions will paralyze our efforts to maintain a cost competitive U.S. base of manufacturing.

BBs and **SPBs** – "Yes. Substantial dumping has continued since the original investigation despite the existence of the orders on BBs and SPBs. This has prevented *** from recognizing the full relief the orders on BBs and SPBs were intended to provide. However, the orders have provided some rationalization of prices in the U.S. market such that *** has been able to pursue needed investments. If the orders are revoked, substantial adverse effects on all of the company's key indicators would result (*e.g.*, declines in sales and production, erosion of profitability, curtailment of investment). This is particularly significant as increased levels of Chinese imports of BBs have exacerbated the domestic industry's vulnerability to pricing pressure in recent years.

In the first sunset review of the orders on BBs and SPBs, the Commission found that there was excess capacity in the subject countries, that they were all export-oriented, and that four of the six subject countries were among the top five nations in the world for total bearing production. Not surprisingly, many of the subject foreign producers have demonstrated their ability to rapidly expand their sales to the U.S. and gain U.S. market share even with the orders in place. This continued presence in the U.S. market also means that the subject producers are in a position to shift large volumes of bearings to the U.S. market if the orders are removed based on continued relationships with customers and distributors. This further increases the likelihood that revocation of the orders would result in high volumes of low-priced imports as the subject foreign producers capitalize on the opportunity to gain additional U.S. market share. Moreover, U.S. prices -- although depressed due to pressure from continued dumping and increases in low-priced imports from China -- remain substantially higher than prices in other markets. This creates an incentive for foreign producers to shift sales to the U.S. if the orders are removed. All of these factors support the conclusion that revocation of the orders would result in a resurgence of high volume, low priced imports in the reasonably foreseeable future.

The following addresses the product - specific consequences of revoking the orders on BBs and SPBs. These expectations are supported in part by our experience with the effects of intense dumping in the years leading up to the orders, as well as the results of continued dumping on the company's operations and profitability throughout the life of the orders.

Ball Bearings

- We expect that revocation of the orders on ball bearings will result in the continued erosion of our high-volume ball bearing business for ***. This is the base volume for ***. Without this high volume business, costs on *** ball bearings and other *** products will increase substantially as reduced sales volume will preclude us from absorbing fixed overhead. We would also anticipate having to lower our prices an additional *** percent with the hopes of maintaining market share. All together, reduced volume, higher costs, and lower prices will mean that we would need to eliminate production capacity, including reducing fixed assets and employment; possibly leading to the outright closure of ***. *See also* Producer Q. Attachment II-4 and accompanying certified statements for additional discussion.

- Revocation of the orders on ball bearings would also adversely impact profitability and sales volume with regard to *** ball bearings manufactured at ***. Similar to ***, we would expect that revocation of the orders would result in price declines of *** percent. *** would likely not be able to cover its costs with such drastic price reductions, resulting in a significant loss of market share. This would cause under-utilization of our fixed assets and employment base. *See also* Producer Q. Attachment II-4 and accompanying certified statements for additional discussion.

- As shown in other parts of this questionnaire response, there are declines in many key financial indicators in the context of ***'s ball bearings operations. For example, Table II-10a shows that ***'s shipments of ball bearings have declined by both volume and value since 2000. Production capacity, production, the number of PRWs, and capital investments have all also declined as reflected in Tables II-10a and III-10. Further erosion of prices due to revocation of the orders will hasten and deepen the magnitude of the declines already being experienced.

  In the three years leading up the orders, production of ball bearings declined, capacity declined, shipments declined, and employment declined. All of these factors supported the Commission's determination that the domestic industry, including *** at that time, was materially injured by reason of unfairly priced imports. Since the orders were imposed, dumping has continued, at very high levels in some instances. We therefore have every reason to expect that if the orders were revoked, dumping would intensify to the same or greater levels as those found during the original investigation, and the adverse effects would be no less significant.

  Indeed, since the Commission's negative determinations and revocation of the antidumping orders on CRBs from Germany and Japan and TRBs from Japan in 2000, there has been a significant increase in U.S. imports of these products. The producers that were subject to the orders on CRBs from Japan and Germany and TRBs from Japan are the same producers subject to the orders on BBs; namely, SKF, INA, FAG, NTN, NSK, Nachi, and Koyo. What is likely to happen upon revocation of the orders on ball bearings, therefore, is poignantly illustrated by what happened once the orders on CRBs and TRBs were revoked.

In the case of CRBs from Germany, import volumes have increased from 2.1 million units in 2000 to 10.6 million units in 2005 while the value has increased 103 percent during the same period (from $26.9 million to $54.7 million). At the same time, average unit values decreased from $13.04 per unit in 2000 to $5.16 per unit in 2005. Imports of CRBs from Japan have also increased from 13.3 million units in 2000 to 24.8 million units in 2005. While the value of imports from Japan is slightly lower than in 2000, it is between 4 – 15 % higher than in any year between 1997 and 1999 (the period prior to revocation of the orders that was examined by the Commission in the first sunset review). Notably, the average unit value of CRBs from Japan has declined from $3.64 per unit in 2000, to $1.70 per unit in 2005.

The same case can be made with regard to TRBs from Japan. There, imports of TRBs from Japan increased from $62.3 million in 2000 to $198.2 million in 2005 – an increase in value of nearly 220 percent since the order was revoked.

There is no reason to believe that the very same producers that responded to revocation of the orders on CRBs and TRBs by significantly increasing their exports to the U.S. would not respond to revocation of the orders on ball bearings in an equivalent manner; causing severe declines in Timken's sales and profitability.

Spherical plain bearings

- Since 2000, sales of SPBs have declined by volume and value and production has been curtailed. These declines coincide with revocation of the orders on SPBs from Japan and Germany. Increases in low-priced imports from these countries following revocation have put pressure on ***'s prices, resulting in some of the declines described. If the sole remaining order on SPBs is revoked, we would expect even more acute declines in sales and production, a significant reduction to our workforce, and serious consideration of exiting the business altogether. *See also* Producer Q. Attachment III-4 (BBs and SPBs).

- Like the ball bearing industry, the SPB industry in the U.S., including ***'s operations, experienced declines in production, capacity utilization and shipments prior to the imposition of the orders. If the subject order is revoked, we would expect to see dumping continue at levels equal to or greater than those found in the original investigation resulting in similar if not worse conditions as those experienced prior to the imposition of the orders on SPBs.

  In sum, the collective impact of revocation of the subject orders on BBs and SPBs will likely result in a resurgence of high volume, low priced imports that would cause prices to fall at least between *** percent, and significant declines in volume. Per unit costs would also increase (as capacity utilization would fall due to decreased volume). Significant workforce reductions of between *** jobs would be inevitable and the closure of one or more facilities would be likely. To put this into the context of likely revenue losses, assuming revocation of the orders on BBs leads to the kinds of price declines and volume displacement discussed here and elsewhere, ***. Currently, output ***. OEM sales, however, would be at much greater risk. We estimate we would lose at least *** of our business, which would be between $***.

  While there are no written business plans to address how the company will proceed if the orders are revoked, management is considering various alternatives, however, including increased reliance on imported components or bearings (an approach also attempted in the 80s) and relocation of affected production facilities."

***

TRBs and SPBs – No response.

BBs – "Yes. We would go out of business."

***

TRBs – "No."

BBs – "*** would NOT anticipate that its U.S. shipments, purchases, employment, revenues, costs, profits would change in the future if the ADD orders on BBs from France, Germany, Italy, Japan, Singapore and the United Kingdom were to be revoked."

SPBs – N/A

***

TRBs and **SPBs** – N/A

BBs – "Yes. As described in II-19, it is likely that the revoking of existing antidumping orders would impact the volume and pace of competitive {unclear} of ball bearing imported from lower labor cost regions."

***

TRBs – "We do not manufacture tapered roller bearings."

BBs – "We employ approximately *** persons in the U.S. in the manufacture of ball bearings product. If the anti dumping orders are allowed to sunset we would expect a reduction in sales and thus employment, but it is very difficult to determine the actual magnitude. It would also cause us to reduce employment in engineering, sales, and distribution."

SPBs – "We ***."

***

TRBs and **SPBs** – N/A

BBs – "The revocation of anti-dumping duty orders on Ball Bearings imported from France, Germany and the United Kingdom could significantly impair pricing and undermine existing customer relationships. This, in turn, could potentially negatively impact all elements of current Bearing operations. No such negative changes would occur if the orders on ball bearings from Singapore and Japan were revoked."

***

TRBs and **SPBs** – No response.

BBs – "Production capacity would remain the same, although capacity utilization would further decline to a level where, as previously discussed, the Company could not survive. We are in the process of ***, so that we can increase our capacity utilization to ***% from current ***%. Removal of the anti dumping orders would most certainly reverse these plans and force us to cease operations."

***

TRBS and SPBs – N/A

BBs – "No. *** would NOT anticipate that its U.S. shipments, purchases, employment, revenues, costs, profits would change in the future if the ADD orders on imports of BBs from France, Germany, Italy, Japan, Singapore and the United Kingdom were to be revoked."

***

TRBs – "Yes. As described in II-19, it would be easy to predict the same could happen in TRBs from China, where they could be more aggressive to promote their export sales to the U.S. if antidumping order were to be revoked. We will have to cope with the market situation in future."

BBs – "Yes. Our market has already been changed to a great extent and we might see it worsen."

SPBs – No response.

***

TRBs and **SPBs** – No response.

BBs – "Yes. If AD duties were revoked, it is likely to have a positive effect on our sales as we could better complement our U.S. production with a broader range of BBs utilizing our worldwide manufacturing capability. This would free up U.S. production machinery that could be used to make new bearings or add to the current U.S. manufacturing volumes of existing bearings resulting in increased sales."

U. S. IMPORTERS' COMMENTS

The Commission requested U.S. importers to describe any anticipated changes in their operations or organization relating to the importation of certain bearings if the existing antidumping duty orders remained in place. (Question II-5)

The following firms responded "No": ***

****

N/A

****

TRBs – "No."

BBs and **SPBs** – "No. N/A"

****

No response.

****

TRBs – No response.

BBs – "No. *** does not anticipate any changes relating to the importation of certain bearings in the future if the AD Order were to remain in place."

SPBs – No response.

****

TRBs – N/A

BBs – "No. *** does not anticipate any changes relating to its imports of ball bearings (BBs) should the antidumping (AD) order remain in place. The AD order has little impact on its import (or other purchasing) decisions. Instead, *** makes all of its BB purchases pursuant to its "***" process for making business decisions. Employing this process, *** examines each of these *** criteria when making purchasing decisions. Over the range of these *** criteria, *** chooses its individual suppliers of BBs based on their relative strengths. Once *** determines its supplier of a particular BB product by applying these criteria, it is difficult to switch, whether or not an AD order is in place, because *** has invested time, energy and resources into certifying the existing supplier. Because ***'s equipment in which BBs are incorporated are sophisticated products, and its customers expect consistent high performance from those products, *** demands precise components from its suppliers, including bearings. Thus, *** also works closely with its suppliers through a rigorous and lengthy process of testing and approving standard BBs or developing customized BBs, and it offers incumbent suppliers the first option to bid on future product development. In other words, to change a supplier for any design or type of BB would require a significant investment by both *** and the new supplier. All of these factors have led to the

development of long-standing, strong relationships with its suppliers that *** will not easily forsake, whether or not the AD order remains in place."

SPBs – N/A

***

"*** operations may decrease if *** purchases its bearings from sources covered under the AD Order, because the AD Order restricts ***'s ability to compete. AD Duties increase the cost of bearings *** purchases, regardless of the end use of the bearing. As bearing costs increase, *** prices increase in order to recover costs. This cost is transferred to the end-user. Should the end-user refuse to continue to pay higher prices with ***, that user may turn to *** competitors for a better price. With decreased demand, and decreased sales, *** operations decrease including its workforce."

***

TRBs – "Yes. Duty imposed makes product more expensive and shipping companies can buy cheaper overseas hence reduction in volumes."

BBs – "Yes."

SPBs – "No."

***

TRBs and **SPBs** – "No. Not applicable."

BBs – "Yes. *** has no intention of changing its current operations. However, as long as the AD orders remain in place, we believe that the level of imports from non-subject countries will continue to increase. If the level of imports from non-subject countries continues to rise, we may have to make changes to our operations to deal with the increased competition."

***.

TRBs and **BBs** – N/A

SPBs – "Yes. Due to manufacturers price increases, we will be forced to seek new suppliers. Add on antidumping becomes too highly priced."

***

See response of ***.

***

TRBs – N/A

BBs – "No. *** imports bearings from Japan and third countries in order to ***. As a result, the continued imposition of the antidumping duty order on BBs from Japan would inhibit ***'s ability to *** and thus its ability to meet its customers' needs. In turn, this would only serve to encourage more bearing-consuming industries located in the United States to shift production to other countries in which they can obtain their bearings without trade-related restrictions."

SPBs – N/A

***

TRBs and **SPBs** – "No. Do not buy."

BBs – "No."

***

TRBs – "Yes. We stopped bearings business since ***, and the last shipment got in USA in ***."

BBs – "No."

SPBs – "No."

***

TRBs – "No."

BBs – "Yes. ***, strongly opposes the continuation of the antidumping duty orders for certain ball bearings from France, Germany, Italy, Japan, Singapore and the United Kingdom. Since 2000, there has been a major structural change in the global production, marketing and sales of BBs. This global restructuring has been driven by three major phenomenon:

(1) Those customers located in the subject countries that demand standard BBs and certain custom BBs for less technical applications have shifted significant portions of their manufacturing capabilities to lower-cost, non-subject countries;

(2) China's industrial base (and, to a lesser extent, the industrial base of other non-subject countries) has grown considerably; and

(3) the production capacity and capabilities of BB producers located in the non-subject countries has grown in tandem with the first two phenomena, and thus intensified global BB competition, because the costs to produce standard BBs and less-technical custom BBs is much lower in the non-subject countries than it is in the subject countries (and the United States).

As a result of these phenomena, BB manufacturers located in the subject countries and the United States have had to reduce and rationalize their worldwide production capabilities in order to remain competitive. First, as noted above, BB production capacity in non-subject countries (particularly

China) has grown considerably since 2000, because the production costs for non-subject countries are much lower that the production costs for subject countries and the United States. This growth has focused largely on standard BBs and less-technical custom BBs, because the quality benchmarks required for these BB types is lower than the quality benchmarks required for more-technical custom BBs. Thus, to remain globally competitive, multinational BB producers located in the subject countries and the United States have over the last five years shifted a significant portion of their production capacity for high-volume, standardized BBs from the subject countries and the United States to non-subject countries. This shift has permitted subject-country and U.S. producers to use their non-subject country production of such BBs to regain their ability to compete in the sale of standard and less-technical BBs in the subject-country and U.S. markets (where they continue to serve remaining OEM and aftermarket demand for these types of product) as well as in non-subject-country markets (where they serve new and expanding industrial infrastructures).

While production capacity for high-volume, standard BBs has shrunk in the subject countries and the United States, production capacity for high-value, custom BBs has grown (albeit proportionally smaller than the capacity levels normally associated with standard BB production). In the high-value, custom BB market, competitive attributes like quality, engineering design and application support, logistics, supply chain lead-time, and supply chain risk drive customer demand for high-value, custom BBs. There thus exists hurdles in the high-value, custom BB marketplace that are more easily addressed if a BB company manufactures locally as opposed to overseas. Therefore, multinational BB producers located in the subject countries have worked over the last five years to retool their subject-country manufacturing facilities to produce high-value, custom BBs for sale to OEMs located in their home markets (specifically, Asia for OEM customers located in Japan or Singapore; the EU for OEM customers located in France, Germany, Italy and the United Kingdom; and the United States for OEM customers located in North America).

The BB industry that has emerged from this global restructuring is much stronger than it was five years ago, especially in the United States. BB plants located in industrialized nations like the United States, Japan and the EU now focus mostly on high end products and services (including niche products), while those located in developing nations like China focus mostly on standard products. As a result, the market forces that now drive the global BB industry have caused BB exports from the subject countries to the United States to shrink dramatically. These same market forces will ensure that exports from the subject countries will NEVER return to pre-2000 levels. The U.S. Government thus should revoke the ADD orders on BBs from France, Germany, Italy, Japan, Singapore and the United Kingdom, because the revocation would not lead to the continuation or recurrence of material injury to the U.S. BB industry."

SPBs – N/A

***

"***."

***

TRBs – N/A. "No. We are not handling."

BBs – "No."

SPBs – "No. No importation from subject country."

***

TRBs and **SPBs** – "No. Not applicable."

BBs – "Yes. *** believes that as a result of the AD orders, the level of non-subject BB imports has increased. Thus, if the AD orders remain in place *** may have to make changes to its U.S. operations to deal with the competition from non-subject imports."

***

TRBs and **BBs** – "No."

SPBs – "Yes. *** anticipates that it would begin to source ***."

The Commission requested U.S. importers to describe any anticipated changes in their operations or organization relating to the importation of certain bearings if the existing antidumping duty orders were revoked. (Question II-6)

The following firms responded "No": ***

***

N/A

***

TRBs – "No."

BBs and **SPBs** – "No. N/A"

***

No response.

***

TRBs and **SPBs** – "No. Do not buy."

BBs – "No."

***

TRBs and **SPBs** – "No."

BBs – "Yes. Procurement Dept. sourcing of BB takes into consideration total cost of product and obtains BB as indicated by overall business objectives. US Automotive market is major driver of lower costs."

***

TRBs – "No."

BBs – "We don't import ball bearings."

SPBs – "We don't import spherical plain bearings."

***

TRBs – "No. We stopped in bearings business ***."

BBs – "No."

SPBs – "No."

***

***.

***

"Should the AD Order be revoked, *** is not forced to raise its prices. With lower prices, and high quality standard of service, *** would have a greater demand for its products. Greater demand equates to more business and an increase in *** operations. An increase in *** operations in turn includes an increase in *** workforce and higher profits."

***

TRBs and **BBs** – "Yes. Making us more cost competitive with option to expand the market to ***. We would revise our plans."

SPBs – "No."

***

"***."

***

TRBs – N/A. "No. We are not handling."

BBs – "No."

SPBs – "No. No importation from subject country."

***

"No. As detailed more fully below in response to Question II-11, *** makes its sourcing decisions for bearings on the basis of factors related to ***'s long-term business outlook, as opposed to the existence of antidumping duty orders. Thus, our operations and organization would not likely be affected by the revocation of these orders. However, our operations and those of our suppliers would be more efficient without the cost of complying with the antidumping duty requirements."

***

TRBs – N/A

BBs – "No. "Although revocation of the order would not lead to any significant changes in ***'s operations or organization, it would, for the reasons given in response to Q. II-5, permit *** to better complement its U.S. production and service the needs of its customers."

SPBs – N/A

***

TRBs – "Yes. Would buy $*** more."

BBs – "Yes. Would buy $*** more."

SPBs – "No."

***

TRBs – "Yes. Like BBs even though China is not subject to anti-dumping duty, we are losing our BBs market. If anti-dumping order were to be revoked, we can easily forecast that in the future Chinese TRBs imports will be increased."

BBs – "Even though Chinese BBs are not subject to anti-dumping order, our customers (bearing manufacturers) seem to be losing their share of the market and so are we."

SPBs – N/A

***

TRBs – "Yes. It would allow us to order from factories that previously had a high anti-dumping rate."

BBs and **SPBs** – "No."

***

TRBs and **SPBs** – "No."

BBs – "Yes. Finished bearings could impact our sales of bearing components. We might have to lower our sales forecast. Investment plans of our customers would be affected."

***

TRBs – N/A

BBs – "No. As stated above in response to Question II-5, *** does not readily change suppliers whether an AD order is in place or not. Instead, *** develops long-standing, strong relationships with its suppliers, and incorporates those relationships into its production and business plans. *** will not forsake those relationships, or the efficiencies they have generated, regardless of whether the BB AD order remains in place or not."

SPBs – N/A

***

"***'s response to the U.S. producer questionnaire."

The Commission requested U.S. importers to describe the significance of the existing antidumping duty orders covering imports of certain bearings in terms of their effect on their firms' imports, U.S. shipments of imports, and inventories. (Question II-11)

The following firms responded "No" or "None": ***.

***

"No. No effect with the exception of antidumping duty expenditure."

***

"No. ADD has made us less competitive in the US market and affects our sales of these products."

***

N/A

***

N/A

***

TRBs – "None."

BBs – "Changed to US based source to minimize liability."

SPBs – "None."

***

TRBs – "We have our vendor bring the bearings through Customs themselves and we buy them landed in the States. This way our vendor is responsible for any antidumping issues, if they are applicable."

BBs and **SPBs** – N/A

***

"No. When we purchase now we make sure we are not the importer of record in China."

***

"No. Our *** designs require specifically designed bearings. We locate sources that can provide designed capability and purchase from those sources."

***

TRBs and **BBs** – No response.

SPBs – "None. Just pay higher duty rates."

***

TRBs – N/A

BBs and **SPBs** – "No impact identified."

***

TRBs – N/A

BBs and **SPBs** – "*** imports customs *** bearings to support customers and *** requirements. Antidumping duties do not impact our decisions to import these bearings as price is not the only consideration. We must also consider quality, delivery and source qualifications. *** bearings are subject to payment of duties."

***

TRBs and **SPBs** – N/A

BBs – "To our knowledge, there is no US firm which produces these items, so the competitive impact , for us, is negligible."

***

"No significance."

***

"The existence of the AD Order has two negative effects on *** imports and inventory: 1) the AD Order increases prices on bearings; and 2) the AD Order restricts the pool of *** suppliers. Due to the higher costs associated with the duties charged under the AD Order, *** is forced to increase its bearing prices, which decreases imports when demand decreases and customers turn to *** competitors. The AD Order further restricts an already limited pool of suppliers for *** bearings, if the cost to procure the bearing is so high, that *** is unable to recover the cost of the bearings. The limited pool of suppliers lessens ***'s imports and *** will be unable to meet its customers' demands. The AD duties increase the price of bearings imported from ***, by approximately ***%."

***

***.

***

TRBs and **SPBs** – "We are importing from non anti dumping sources."

BBs – "We are trying to import from non anti dumping sources."

***

TRBs – "It is significantly to risky not knowing the specific rate for import costs."

BBs and **SPBs** – "None imported."

***

"No significance."

***

"No significance."

***

"The existing antidumping duty orders have had no significant effect on ***'s imports, shipments or inventories."

***

"No effect."

***

"The orders are significant, without such orders, dumped products would be sold for prices even below that available by manufacturing in low cost countries. This would result in economic ramifications for U.S. bearing manufacturers."

***

TRBs and **SPBs** – N/A

BBs – "No. OEM business was reduced, and main business is now aftermarket."

***

TRBs and **BBs** – "No. See previous comments. Duty hurts local sales in a shipping market segment."

SPBs – "No."

***

TRBs – N/A

BBs – "The AD order has had little effect on ***'s import decisions. *** bases its purchasing decisions for BBs, and other inputs, on its *** business decision-making process. Therefore, *** examines each of these *** criteria when making purchasing decisions. Over the range of these *** criteria, *** chooses its individual suppliers of BBs based on their relative strengths. For example, it purchases from *** because this supplier's bearings exhibit the highest quality in terms of tolerance and surface finish, which are important physical characteristics for the bearings *** uses. Also, *** consistently meet ***'s on-time delivery schedules. *** purchases some bearing products from ***, on the other hand, because of its engineering support and wide range of products. Such engineering support gives *** a significant advantage in working with *** to develop new products. In addition, *** can more easily inspect the plants of U.S., as opposed to foreign, suppliers to ensure that they satisfy its certification requirements. *** increases its imports from foreign suppliers who are able to meet its stringent quality and timeliness requirements when U.S. producers cannot do so."

SPBs – N/A

***

"Do not import from subject sources."

***

TRBs and **SPBs** – N/A

BBs – "Our imports are approaching zero."

***

TRBs and **SPBs** – N/A

BBs – "The average antidumping duty deposit rate for *** in the reviews in which *** has participated has been ***%, which is equivalent to *** in an investigation."

***

"No significance."

***

"***."

***

"The antidumping duty orders have had no impact on ***'s imports, U.S. shipments, and inventories."

***

"No significance."

***

TRBs – "N/A. We do not have any business transaction."

BBs – "Anti-dumping duty orders is not significant problem as US market for our certain bearings is limited."

SPBs – "No importation from subject country."

***.

TRBs and **BBs** – No response.

SPBs – "No. Anti-dumping appears to be in place on product that is not available in the USA, and, or product that is sold at above local market conditions in the USA. Operating primarily in a specialized industry such as ***, we are very aware of worldwide pricing. Antidumping has restricted the importation of certain product, forcing a lack of competition in certain areas, within the USA."

***

"*** stopped importing bearings in *** for reasons unrelated to the anti-dumping duties. The overall effect of the duties is to increase the cost of these products, which in turn increases the costs of products using bearings which *** sells."

***

TRBs and **SPBs** – N/A

BBs – "No change."

***

TRBs and **BBs** – "It limits our ability to import product from any supplier and makes it difficult to be competitive with domestic manufacturers who will not sell their product to us."

SPBs – N/A

***

TRBs – No response.

BBs – "Imports of ***bearings from *** have decreased *** from ***. A number of factors have caused this decline including the rise of low priced imports from China which pays no duty. This type of unfair competition has made it difficult to sell *** bearings into the market."

SPBs – No response.

***

"No significant change to our procurement function. Most of the product of certain bearings imported are because of the ***. We normally try to source product standards or domestic companies first because of *** and our supplier approval system."

***

TRBs and **SPBs** – N/A

BBs – "No Significant Effect has been observed in our operation during the period of question."

***

TRBs – "The ADD order covering imports of TRBs from China does not affect ***'s imports, U.S. shipments of imports, and inventories."

BBs – "The ADD orders covering imports of BBs from France, Germany, Italy, Japan, Singapore and the United Kingdom does not affect ***'s imports, U.S. shipments of imports, and inventories."

SPBs – "Not applicable."

***

"No effect."

***

"The existing antidumping duty orders covering imports of certain bearings increases our costs of doing business."

***

"Same."

***

TRBs and **SPBs** – "Not applicable."

BBs – "*** imports ***. We have not been able to nor have we considered other import options for ball bearing products. The duties that have been applied did require that we eliminate *** and obliged us to ***. Furthermore, the duties did have an adverse impact on our competitiveness in the marketplace, especially in light of the increase in non-subject imports of BBs."

***

TRBs and **SPBs** – "Not applicable."

BBs – "The AD order on BBs prevents *** from complementing our U.S. production with a broader range of BBs from imported sources. Prior to AD duty imposition, *** estimates that ***% of our sales consisted of imported bearings. The inability to offer a broader product line to our customers has impacted ***'s sales and, in turn, our U.S. production of BBs."

***

TRBs – N/A

BBs – "***'s imports of ball bearings have not changed as a result of the antidumping duties on ball bearings. ***'s inventories of ball bearings are also unchanged, but *** does view it as necessary to attempt to pass on to its customers through its U.S. shipments the increased cost that results from having to pay these antidumping duties."

SPBs – "*** has historically sourced a key spherical plain bearing import from France and would prefer to continue to source the bearing there, because of the time-proven certainty of the quality and supply of, and stock labor to produce the bearing. In contrast, choosing a new source for the bearing is risky. Nonetheless, *** anticipates that it will begin to source the bearing from Italy if the antidumping order continues, because the duty savings would outweigh the risk."

***

TRBs and **SPBs** – No response.

BBs – "*** imports. The only impact is the additional duty. *** must purchase the named bearings from its *** because that is its only approved source for the bearings."

***

TRBs and **BBs** – N/A

SPBs – "The existing anti-dumping duty order has had no impact on our imports."

***

"The existing antidumping duty orders are not significant to *** in terms of our imports, U.S. shipments of imports, and inventories."

***

TRBs and **SPBs** – No response.

BBs – "We are significantly reducing our shipments of ball bearings from countries subject to anti-dumping on account of the filing requirements which are very cumbersome and costly. Our revenues stand in no relation to these costs."

***

"***'s imports are ***. Imported product is used to support ***'s broad line. If the Orders are revoked and underpricing continues and surges, as expected, then *** would need to source accordingly in order to compete as best as possible."

***

TRBs and **SPBs** – "Not applicable."

BBs – "The antidumping order had a short term effect of significantly raising prices in the US marketplace but after 2-3 years, normal market conditions took over, with pricing dictated by competition from major producers in the USA, EU and Japan. However, our level of imports, US shipments and inventories did not change significantly. The antidumping order increased import costs and therefore affected our financial performance as competitive conditions in the U.S. market did not allow us to raise prices to levels that allowed recovery of all increased costs. The dumping order has resulted in some consumers of major branded bearings paying more for bearings than in other countries. In that regard, the dumping order helped accelerate the introduction into the market of products from Eastern Europe & Asian countries not affected by the order, particularly from China, in recent years. In order to remain competitive, *** parent company has been compelled to source some ball bearings from the lowest cost producers in order to remain competitive. In addition, the antidumping order created a gray market where companies not authorized and some authorized to sell brands like *** brought in the product through OEM's and other sources and sold them at ***% below market price, undercutting ***'s prices for the same bearings. *** believes that the Commerce Department's recent change in practice, resulting in assessment of duties at "All Other" rates for imports of gray market goods, has helped somewhat in curtailing the gray market imports. The foregoing response applies to ball bearings imported from France, Germany and the UK."

***

TRBs and **BBs** – N/A

SPBs – "Duty reduces margin."

***

"The existing antidumping duty orders have little significance for ***. First, the antidumping duties have decreased over time through the administrative review process, such that they are manageable. In addition, *** relies on domestic sources for the vast majority of its need for subject merchandise, because domestic sourcing is crucial for its U.S. operations, and is becoming more crucial as it increases its domestic operations. Further, ***'s policy is to work with the most competitive bearings producer, on the basis of the quality and price for the product, as opposed to exogenous factors such as dumping duties. Finally, domestic and foreign bearings producers alike have globalized their operations i.e., bearings producers are able to supply locally in several markets throughout the world. This development in the industry has occurred notwithstanding the antidumping duty orders. However, the antidumping duty orders have required significant investments in time and legal and other management expenses; these artificial costs undermine the increased efficiency associated with the globalization of production for bearings."

***

TRBs – "The antidumping duty orders were in place when we started business so we have not seen any difference. In addition, taper roller bearings amounts to less than ***% of our total business so if there is any impact it will be very minor."

BBs – "No impact."

SPBs – "No impact."

***

TRBs – "1) We have paid anti-dumping duty about $*** in 2005, which causes our firm a big lose. 2) To keep our bearing business, we have to get Customs Bond, which we are required $*** collateral for our new bond. Otherwise, we won't be able to do bearing business. 3) We believe that anti-dumping on TRBs does not benefit both US customers and Chinese manufacturers."

BBs and **SPBs** – No response.

***

TRBs and **SPBs** – "Do not know.."

BBs – "Our *** supplier moved production of one part from a plant of theirs in *** to a plant of theirs already in ***."

***

TRBs and **SPBs** – "Not applicable."

BBs – "The bearings subject to antidumping duties are not manufactured by any other company within the United States so the level of imports and inventories would continue to follow consumer

demand. Ultimately, because no other source exists domestically for these bearings the additional costs related to antidumping have been passed on to the U.S. Consumers."

***

TRBs – N/A

BBs – "The AD order on BBs has not been a major consideration underlying ***'s imports or inventories of BBs. Rather, the decisions to import or maintain inventory of BB models are based on the supply and demand condition in BB markets worldwide. For example, in those instances where it was either not economically feasible to met customer demand for a particular BB model locally, or where U.S. demand for BBs outstripped local production, *** imported bearings from Japan and third countries. As a result, the volume of BB imports from ***. Meanwhile, ***."

SPBs – N/A

***

TRBs – N/A

BBs – "(Japan). The duties have caused us to import less product."

SPBs – "France – Do not import. China – No anti-dumping."

***

"Antidumping duty has no significance on the decision to import."

SPBs – "No. No significant effect."

***

TRBs and **SPBs** – No response.

BBs – "We are unsure of impact due to the interchangeability of these parts."

***

TRBs – N/A

BBs and **SPBs** – "*** imports both types of bearings from *** to be used in *** in the United States. For example, ***. No commercial alternative is available. Therefore, the anti-dumping duty cannot

successfully change behavior to re-source bearings from domestic suppliers. The anti-dumping duty is merely a punitive tax."

***

TRBs and **SPBs** – "No. No significant effect."

BBs – "No. The antidumping duty orders on ball bearings from France, Germany, Italy and the United Kingdom currently have no impact on the U.S. importation of ball bearings. Since the imposition of the antidumping order, *** has installed substantial ball bearings production capacity in the U.S. This production capacity is devoted almost entirely to the U.S./North American market. While in the early years of the antidumping order (when dumping margins were high), trade flows and sourcing decisions may have been affected by the orders themselves, this has not been th case for several years, for a number of reasons. First, dumping margins on ball bearings from Germany, Italy and the U.K. (countries in which ***) has been very low. Second, other economic factors, such as relative labor rates, proximity to markets, rationalization of production, and customer preference or requirements for local production, are far more important determinants of where to manufacture ball bearings than potential antidumping duties. The U.S. is an especially attractive manufacturing location for products sold to automotive and aerospace markets, because of local content requirements, and product traceability requirements for reasons of product liability. Moreover, compared to most of Europe, the U.S. has relatively low labor and energy costs.

*** manufacturing configuration has evolved to the point that imports of product from the covered countries are limited primarily to custom products that cannot be manufactured elsewhere. This change reflects the long-term shifts to emerging countries for commodity bearings, and local production for custom product that is sold in volume."

The Commission requested U.S. importers to describe any anticipated changes in their imports, U.S. shipments of imports, or inventories of certain bearings in the future if the existing antidumping duty orders were revoked. (Question II-12)

The following firms responded "No" or "None": ***.

***

"Yes. We would increase our overseas purchases."

***

N/A

***

"No significance."

***

"It would most likely be a quick impact. The product interchange (standard dimensions) dumped product could replace U.S. manufactured or legally imported products quickly."

***

TRBs – "No. We stop bearing business since ***."

BBs – "No."

SPBs – "No."

***

***.

***

TRBs – "We might import more from said countries as their landed cost would become more economical."

BBs and **SPBs** – "We might import more from said countries as their landed cost would become more economical for us."

***

TRBs – N/A

BBs – "As discussed above, the AD order does not influence ***'s BB importing decisions. *** bases its purchasing decisions for BBs, and other inputs, on its *** business decision-making process. Therefore, *** examines each of these *** criteria when making purchasing decisions.

Over the range of these *** criteria, *** chooses its individual suppliers of BBs based on their relative strengths. For example, it purchases from *** because this supplier's bearings exhibit the highest quality in terms of tolerance and surface finish which are important physical characteristics for the bearings *** uses. Also, *** consistently meet ***'s on-time delivery schedules. *** purchases some bearing products from ***, on the other hand, because of its engineering support and wide range of products. Such engineering support gives *** a significant advantage in working with *** to develop new products. In addition, *** can more easily inspect the plants of U.S., as opposed to foreign, suppliers to ensure that they satisfy its certification requirements. *** increases its imports from foreign suppliers who are able to meet its stringent quality and timeliness requirements when U.S. producers cannot do so."

SPBs – N/A

***

"The revocation of the AD Order removes a barrier to trade, because the absence of the Order opens the pool of bearing suppliers and decreases bearing prices. *** will then have the flexibility to consider a wider array of bearing suppliers than from its regular sources. This increases competition, not only in the bearing market, but for *** individually. If *** is able to expand its sourcing at competitive prices, it is able to satisfy customer demand, and increase its sales. The more competitive the bearing sales, the more sales *** makes. As a result, *** is able to turn a profit. With a steady flow of profits, *** will be able to procure increased amount of bearing imports."

***

"***."

***

"No. No changes."

***

TRBs and **SPBs** – "Not applicable."

BBs – "All ball bearing products sold currently come from Japan. We will not change our position based on changes to the antidumping duty."

***

"Yes. ***."

***

TRBs – "N/A. No. We do not have any business transaction."

BBs – "No. In general, there will not be any significant changes even if the antidumping duty orders were to be revoked because the demand of the certain ball bearings which we import from Japan into the US market is limited and we recognize its market is not growing."

SPBs – "N/A. No. No importation from subject country."

***

"Yes. The company may consider buying from other suppliers in China. No study have been made as to the significance of the changes."

***.

TRBs and **BBs** – No response.

SPBs – "Yes. As indicated in 15, certain product could bring in a better competitive situation within the USA. It would help reduce costs for some of our customers, allowing the {missing} to be more global competitive. *** would see an increase in product brought into the USA, but relatively minor. US manufacturing of *** product are above capacity today; therefore impact on US manufacturing would be minimal."

***

TRBs – N/A

BBs – "No. The revocation of the antidumping order on BBs from Japan is unlikely to have a significant impact on ***'s imports or inventories of BBs. Rather, customer demand in the U.S. market will be the primary impetus driving such developments, as explained in response to question II-2 above."

SPBs – N/A

***

TRBs – "Yes. We would investigate the opportunities that would arise from the removal of the duties."

BBs – "We would probably increase our imports from Japan and look to the other countries for competitive products."

SPBs – N/A

***

TRBs – "No."

BBs – "No. *** would not anticipate any change in the character of the operation if the ADD were to be revoked."

SPBs – "No."

***

TRBs and **SPBs** – N/A

BBs – "No significant change is anticipated on imports from Japan."

***

TRBs – "No."

BBs – "No. *** would NOT anticipate that its imports, U.S. shipments of imports, or inventories would change in the future if the ADD orders on BBs from France, Germany, Italy, Japan, Singapore and the United Kingdom were to be revoked."

SPBs – "Not applicable."

***

"No, we normally source standard bearings onto *** when possible. We normally source domestically because of *** and our system for supplier approval."

***

TRBs – "Yes. See II-6."

BBs and **SPBs** – "No."

***

TRBs – "No. Since taper roller bearings business is less than ***% of our total business and is only supplementary to our major product lines either way it will not affect our business plan."

BBs – "No impact."

SPBs – "No impact."

***

TRBs and **SPBs** – "No. Not applicable."

BBs – "No. Again, the bearings subject to antidumping duties are not manufactured by any other company within the United States so the level of imports and inventories would continue to follow consumer demand. Ultimately, U.S. consumers would benefit by the repeal of the antidumping order through lower pricing."

***

TRBs and **SPBs** – "Not applicable."

BBs – "If AD duties were revoked, it is likely to have a positive effect on our sales as we could better complement our U.S. production with a broader range of BBs by utilizing our worldwide manufacturing capability. This would free up U.S. production machinery that could be used to make new bearings or add to the current U.S. manufacturing volumes of existing bearings resulting in increased sales."

***

TRBs – N/A

BBs – "No. *** would not anticipate any such changes with respect to ball bearings."

SPBs – "No. *** would cancel its plans to change the source country for its French origin spherical plain bearings."

***

TRBs and **BBs** – "Yes. Potential to increase sales to shipping companies and across ***."

SPBs – N/A

***

TRBs and **SPBs** – No response.

BBs – "At this time *** is the only approved source."

U.S. PURCHASERS' COMMENTS

The Commission's questionnaires in this review requested comments from U.S. purchasers (question III-34) regarding the effects of revocation of the antidumping duty order on (1) the future activities of their firms and (2) the U.S. market as a whole. The following comments were received:

***

(1) **Activities of firm.--**"Our firm is looking at potential suppliers within the countries listed in the next year supply constricts are the major reason."

(2) **Entire U.S. market**.– "The revocation will allow component newer companies in the above countries to compete on a level playing field for customers, and allow purchaser to have a wider selection of suppliers."

***

(1) **Activities of firm.--**"Continue to annually negotiate best price possible from known, trusted, reliable suppliers."

(2) **Entire U.S. market**.– "For TRB's - prices of all tapered roller bearings will drop, may soon eliminate all other countries from bearing production, China may take control of TRB world market."

***

(1) **Activities of firm.--**"It will have little affect since product using BB becomes ***."

(2) **Entire U.S. market**.– "It will help US manufacturers compete. Now foreign competitors can ship products using BBs into the U.S. at very low duty rates depending on the end item. The U.S. manufacturer has to pay a much higher price for BBs and is at a competitive disadvantage. This is very much the case in the motor business, and would have been for us also since our main competitions produce in Japan ."

***

(1) **Activities of firm.--**"Revocation will not alter our purchasing activities as we will not be purchasing from these countries. However, it will alter our marketing. It would cause us to more actively warn our customers against potentially bogus and unqualified product being actively sold into the *** by disreputable and/or greedy distributors that will readily be purchasing these certain bearings from the markets listed."

(2) **Entire U.S. market**.– "Revocation would be detrimental to the U.S. market for the immediate as well as long-term future. The same concerns that initially prompted the antidumping duty order to originate are still valid concerns and would become problems again very quickly if the order is revoked. While there may be some industries where bearings of questionable quality and specifications are acceptable, there are others (such as aviation, medical, military, etc.) where exacting criteria must be met unequivocally. This is nothing new. The majority of the foreign

manufacturer's did not comply with these requirements prior to the antidumping duty order, and there is absolutely no reason to believe they would suddenly comply with such criteria now or in the future if the duty order is revoked. Additionally, how will you police the market to be certain that these bearings (not meeting specific criteria) aren't ending up in applications they're not meant for? This, again, was part of the original problem the helped prompt the antidumping order to begin with."

***

(1) **Activities of firm.--**"With the only affected item being the ball bearing, impact on *** will be minimal."

(2) **Entire U.S. market**.– "Should create a more competitive market better for the consumer."

***

(1) **Activities of firm.--**"To gain a competitive edge some of these countries may choose to revert to predumping pricing strategies. If this happens and if end users demand predumping pricing then distribution will tend to react by supporting end user demands. On the other hand, countries that maintain the antidumping levels that have developed may face sales decreases forcing them to reconsider. Some may revert to predumping patterns. It should be noted that other countries (not named in this action) may see revocation as a signal to increase penetration of the U.S. market through non-competitive low pricing."

(2) **Entire U.S. market**.– "In the last five years, U.S. bearing manufacturers have certainly improved their productivity and have done many of the things necessary to compete in a global bearing market. They are themselves world-wide manufacturers of bearings. The question is: will competitive pressures or the size of the U.S. bearing market mean some foreign manufacturers of bearings will sell their product into the U.S. market at levels well below established prices in the U.S. marketplace today."

***

(1) **Activities of firm.–** no comment

(2) **Entire U.S. market**.– "Lower prices, better delivery."

***

(1) **Activities of firm.--**"Dual source bearings to protect against capacity issues from one company - Timken."

(2) **Entire U.S. market**.– "Qualify more sources for the next capacity crunch."

***

(1) **Activities of firm.--**"No significant change. Will continue to seek high quality efficient suppliers regardless of location."

(2) **Entire U.S. market**.– no comment

***

(1) **Activities of firm.--**"No change."

(2) **Entire U.S. market**.– "Price competition and availability is expected to increase."

***

(1) **Activities of firm.--**"Imports of bearings would continue."

(2) **Entire U.S. market**.– "Imports of bearings would increase."

***

(1) **Activities of firm.--**"As an OEM, I would expect to see a reduction in cost and an increase."

(2) **Entire U.S. market**.– "Same as above for other O.E.M.'s and added pressure (cost) on: 1. Availability. 2. US bearing manufacturers. It would most likely increase our reliance on foreign supplier for this commodity.

***

(1) **Activities of firm.--**"Revocation of antidumping duties will likely lead to seek quotes from more sources internationally which has the potential to lower prices.."

(2) **Entire U.S. market**.– " Revocation of antidumping duties will likely lead to seek quotes from more sources internationally which has the potential to lower prices."

***

1) **Activities of firm.--**"*** will continue to source the best competent source at the lowest cost possible. However, a bearing producer will have to meet ***'s requirements of quality, delivery, and technical support. If all criteria are not met, then cost becomes less important. A bearing at 10% the market cost is not beneficial if *** experience delayed/no delivery and /or technical support is unavailable during a part failure."

(2) **Entire U.S. market**.– "The revocation of the antidumping duty would for the US bearing to reduce cost in a effort to compete with foreign competition. Forcing competition would mandate US reduction in operating cost, following the principle of only the strong survive."

***

(1) **Activities of firm.--**"If they are revoked it would have limited effect on our current purchasing practices due to our engineering requirements. We would likely experience some cost savings which would help our product be more cost effective but this would effect our industry as a whole so we would not gain a significant competitive advantage."

(2) **Entire U.S. market**.– "We don't have a position on the total US market as we can only speak our industry."

***

(1) **Activities of firm.--**"Our customer will still direct us to buy from their approved directed suppliers."

(2) **Entire U.S. market**.– "Do not know. I would guess prices would decrease somewhat due to higher/larger availability."

***

(1) **Activities of firm.--**"None anticipated."

(2) **Entire U.S. market**.– "Not enough knowledge/information of market."

***

(1) **Activities of firm.--**"No change."

(2) **Entire U.S. market**.– "Must be competitive. "

***

(1) **Activities of firm.--**"Will open more possibilities to new sources."

(2) **Entire U.S. market**.– "Will increase competition. "

***

(1) **Activities of firm.--**"2006/2008: Either way with or without the revocation of Anti Dumping Duty Order we will continue to seek alternate sources of supply as we must make sure that we have adequate global primary and secondary capacities in place as to not let the supply of Certain Bearings be the limiting factor of our future. We no longer rely on having the necessary availability and competitively priced US manufactured bearings to meet our future needs. We will strive to have more than two sources of supply for all the bearings products we use today."

(2) **Entire U.S. market**.– "2006/2008: We see little change happening to the US Market as it will be again be dominated by one major producer leaving or no incentive for new players to expand or enter the US market."

***

(1) **Activities of firm.--**"Our firm will continue to offer the highest quality bearings available. We are also price conscious. We will buy bearings at the lowest cost given at adequate level of quality."

(2) **Entire U.S. market**.– "Many firms following the same philosophy as ***. "

***

1) **Activities of firm.--**"For many reasons, revocation of the AD order on BBs from Japan will do little to change ***'s BB purchasing practices. *** does not purchase the same models of BBs, from suppliers in Japan as it does from domestic producers. Like its domestically sourced BBs, ***'s purchase of BBs from Japan are determined on the basis of the strengths of the specific supplier. In addition, *** *** each of the BB models that it uses, and it purchases more than *** models annually. *** process and *** policy make it highly unlikely that *** will change suppliers, even if the antidumping order on BBs from Japan is revoked. These buying practices have led *** to develop long-term relationships with its multiple suppliers-suppliers who have become extremely knowledgeable of ***'s BB requirements, so that the quality of the products and the service provided by the suppliers are enhanced. For all of these reasons, changing suppliers would be a lengthy and expensive process, which could disrupt ***'s supply chain. It is a process that *** would prefer to avoid, and therefore revocation to the AD order on BBs from Japan will have little effect on ***'s purchasing decisions, and to that extent, little adverse effect on the domestic industry."

(2) **Entire U.S. market**.– "Because *** and other purchases have long-term, highly individualized relationships with their suppliers, *** does not anticipate significant changes to the U.S. market should the order on BBs be revoked. *** expects that customer demand will continue to be the impetus driving any developments in the BB industry. Moreover, most of the large foreign producers now produce BBs in the United States, and supply U.S. consumers (including ***) in large part from their U.S. facilities."

***

1) **Activities of firm.--**"Since the dumping duties do not apply to assembled product, our off shore competitors are not penalized when shipping gear boxes into the U.S.A. thus, they have a competitive advantage. Eliminating the duties would benefit *** alternately, applying the duties to assembled product."

(2) **Entire U.S. market**.– "We need a domestic bearing industry. The elimination of dumping duties would damage our domestic bearing producers abilities to continue research and development, modernize plants, and maintain adequate capacities to meet market demand. Effects would be seen in 2 to 4 years. Dumping duties should be applied to all applicable products being imported, whether assembled into other products or shipped loose. If the domestic customers of the bearing industry are damaged by foreign competition using bearings that would have had duties applied if the bearings were shipped loose, then the market opportunities for domestic bearings."

***

(1) **Activities of firm.--**"Our company is Rohs compliant. I see no problem."

(2) **Entire U.S. market**.– No comment.

***

(1) **Activities of firm.--**"Antidumping order do not affect ***."

(2) **Entire U.S. market**.– "Antidumping would potentially affect market price. "

***

(1) **Activities of firm.--**"Prices likely to rise, deliveries like to extend."

(2) **Entire U.S. market**.– No comment.

***

(1) **Activities of firm.--**"With revocation of the antidumping duty orders for imports of certain bearings from France, Germany, Italy, Japan, Singapore, and the United Kingdom, probably the bearings produced in those countries would be more competitive as far as pricing. Consequently, those bearing manufacturers may be considered as potential certain bearings suppliers to our company, as long as they meet our company's quality requirements.

The revocation of the antidumping duty orders for imports of certain bearings from China probably would have little effect in our company's future activities. The Chinese bearings manufacturers have to improve significantly the quality of their products to meet our company's quality requirement, and be competitive."

(2) **Entire U.S. market**.– "The revocation of the antidumping duty orders for imports of certain bearings from France, Germany, Italy, Japan, Singapore, United Kingdom, and China would require the U.S. certain bearing manufacturers to be more competitive. Reducing the certain bearings manufacturing costs by improving productivity, investing in new equipment, training the workforce, and reducing wastes."

***

(1) **Activities of firm.--**"Decline in revenue and profit, impact on company cost structure unknown but could result in the elimination of jobs, lower end-user prices; lower revenue and profit for bearings manufacturers and distributors, possible job losses in the industrial goods industry.."

(2) **Entire U.S. market**.– "No comment."

***

(1) **Activities of firm.--**"None – Ball Bearings we purchase are not part of antidumping duty order."

(2) **Entire U.S. market**.– "Unknown. "

***

(1) **Activities of firm.--**"None at the moment. Future – will increase purchasing of these items."

(2) **Entire U.S. market**.– "None at the moment. Future – will increase purchasing of these items."

***

(1) **Activities of firm.--**"Sales and demand for bearings have increased over the past several years. Steel shortages and steel price increases have made a tremendous impact on the bearings market. The demand for bearings will remain high this year and unfortunately so will steel pricing. The last antidumping duty caused bearing prices to increase by exorbitant amounts. This forced our customers and ourselves to cancel many orders. Eventually, the market prices stabilized to reasonable amounts. But by this time a large disruption in our business had already occurred."

(2) **Entire U.S. market**.– "No comment."

***

(1) **Activities of firm.--**"Minimal changes due to custom orders and custom design. Reduce the price of some products."

(2) **Entire U.S. market**.– "None."

***

(1) **Activities of firm.--**"Revocation of antidumping duties will not change the demand of our customers."

(2) **Entire U.S. market**.– "Very little manufacturing of ball bearings take place in the U.S. Therefore, the demand in the U.S. will be met by global supply. Antidumping duties can not affect the U.S. when very little supply can be me in the U.S. "

***

(1) **Activities of firm.--**"Unknown."

(2) **Entire U.S. market**.– "Unknown."

***

(1) **Activities of firm.--**"No comment."

(2) **Entire U.S. market**.– "Dumping product can pose a serious problem for our market. There is a significant gap in prices from authorized channels vs. dumping channels. If dumping is not kept under control, it will seriously threaten the business or many distributors. It also jeopardizes the profitability of the manufacturers. However, the manufacturers should be able to control the gray market."

***

(1) **Activities of firm.--**"Potential effects will not make a difference for *** because revocation is already in place and the impact on cost has already been taken in account."

(2) **Entire U.S. market**.– "Unknown."

***

(1) **Activities of firm.--**"Lower gross profit. Lower quality, increased time and money on controlling quality. Currently easy to identify quality differences."

(2) **Entire U.S. market**.– "Lower prices. Increased North American bearing manufacturer consolidation. Loss of USA jobs. "

***

(1) **Activities of firm.--**"Little impact – new suppliers take a lot of development and testing time."

(2) **Entire U.S. market**.– "Little impact – new non domestic suppliers are still in the development stages. "

***

(1) **Activities of firm.--**"The existing antidumping orders are likely to have little commercial significance on ***'s operations for several reasons. First, the antidumping duties have decreased over time through the administrative review process, such that they are manageable for our suppliers, who are obligated to pay the duties; we expect that such duties are passed on to us to the extent that competitive conditions permit. In addition, *** relies on domestic sources for the vast majority of its need for subject merchandise, because domestic sourcing is crucial for its U.S. operations, and is becoming more crucial as it increases its domestic operations. Antidumping duties are not a factor for domestic purchases. Further, ***'s policy is to work with the most competitive bearings producers, on the basis of the availability, quality and price for the products we require, as opposed to exogenous factors such as antidumping duties. Finally, domestic and foreign bearings producers alike have globalized their operations, i.e., bearings producers are able to supply locally in numerous markets throughout the world. This development in the industry has occurred notwithstanding the antidumping duty orders, which would be likely to encourage activities to take place within the United States. In short, competitive pressures are more likely to affect future operations of our suppliers than continuation of antidumping duties in the United States."

(2) **Entire U.S. market**.– "*** does not follow market-wide trends to bearings."

***

(1) **Activities of firm.--**"We purchase from Japanese bearings now, and revocation of the antidumping duty will be price competitive against bearings from other countries"

(2) **Entire U.S. market**.– "Antidumping duty order will be acceptable to protect U.S. mfg, but duty rate must be fare {sic}."

***

(1) **Activities of firm.--**"We expect no effect; we will continue to conduct our business as we did under the orders."

(2) **Entire U.S. market**.– "We expect no effect, as everyone will continue to conduct business as they did under the orders."

***

(1) **Activities of firm.--**"Will reduce the amount of duty we have to pay on bearings."

(2) **Entire U.S. market**.– "N/A."

***

(1) **Activities of firm.--**"None."

(2) **Entire U.S. market**.– "None."

***

(1) **Activities of firm.--**"Based on watching the increase in anti-dumping, *** is currently reviewing the competitive market."

(2) **Entire U.S. market**.– "N/A."

***

(1) **Activities of firm.--**"No effect."

(2) **Entire U.S. market**.– "No effect in aircraft/aerospace segment."

***

(1) **Activities of firm.--**"This will have a limited effect on our firm since we utilize the same group of suppliers."

(2) **Entire U.S. market**.– "Unknown."

***

(1) **Activities of firm.--**"*** has divisions that buy and use bearings that might be able to purchase those bearings at a lower cost if the orders would sunset. ***, the dumping orders neither help or hurt subject industries."

(2) **Entire U.S. market**.– "U.S. manufacturers of bearings would be hurt and since U.S. manufacturers are generally willing to make low volume specials that importers don't want to deal with, it is quite possible that the availability of certain bearings would be worse if the order sunsets."

***

(1) **Activities of firm.--**"Unknown."

(2) **Entire U.S. market**.– "Unknown."

In addition, the following companies filled out purchaser questionnaires, but did not respond to question III-34:

***.

FOREIGN PRODUCERS'/EXPORTERS' COMMENTS

The Commission requested foreign producers to indicate whether they anticipated any changes in their operations or organization relating to the production of certain bearings in the future if the existing antidumping duty orders were revoked, and if yes, to describe those changes. (Question II-3)

Ball Bearings

The following firms responded "No" or "None": ***.

***

"No. N/A – no production."

***

"No. N/A – no production."

***

"No. N/A – no production."

***

"No. The firm would not anticipate any changes in the character of operations if the ADD orders were to be revoked, especially since Japan and Asia are the primary target markets for the firm."

***

"Yes. There would likely to be rationalization between ***. There is also a probability that other suppliers would be able to increase their US market share as we would face the likelihood of selling into the USA with reduced opportunity for profit."

***

"No. Beginning before the imposition of the ball bearing order, *** has invested millions of dollars in BB production facilities in the United States and elsewhere. *** has made these

investments as a result of its core strategy to globalize and diversify its business in response to customer preferences and market demand. This strategy will not change, whether or not the AD order on BBs is revoked. Having invested significant capital and resources to localize U.S. production, *** will continue to supply the U.S. market primarily from those facilities, and to supply the Japanese market primarily from its facilities in Japan. Moreover, the U.S. market accounts for a *** share of ***'s BB sales – in 2005, *** percent (by quantity) of the finished BB models produced or purchased by *** in Japan were exported to the United States. See data reported in response to Question II-17a below. Furthermore, regarding its production strategy in Japan, *** does not anticpate any changes if the AD order on certain ball bearings is revoked. The majority of BBs produced in Japan are sold there. In addition, regarding sales to major OEMs in Japan, once a customer selects a bearing manufacturer as its supplier for a given bearing product, that bearing manufacturer generally becomes the primary supplier of that product to that customer. Incumbent suppliers in turn are generally give the first option to bid on future product developments for a given application. Consequently, BB manufacturers, *** included, develop long-standing strong relationships with their Japanese customers, which it will not simply abandon in the hopes of new sales in the United States."

***

"No. The firm would not anticipate any changes in the character of operations if the ADD orders were to be revoked, especially since Europe is the primary target market for the firm."

***

"No. Even if the anti-dumping duty order has a significant effect on our financial results, it does not have a significant effect on our manufacturing plan. *** will not change its operation or its organization if the anti-dumping duty order were to be revoked."

***

"No. We would not anticipate any changes in the character of operations if the AD orders were to be revoked."

Spherical Plain Bearings from France

***

"***."

***

"***."

Tapered Roller Bearings from China

The following firms responded "No" or "None": ***.

***

> "Yes. Our firm may export tapered roller bearings to the United States based on customer and market development, although such final decisions would ultimately be made by *** for their respective shares of our output."

***

> "No. Since our target market is home market, we have no plan to export to foreign countries and regions or doesn't plan to develop international markets."

***

> "Yes. If the antidumping duty order on Chinese TRBs is revoked, we believe that this would result in significant increases in TRB exports by other Chinese producers to the U.S. In order for our parent to be able to compete in the absence of an antidumping duty order against Chinese TRBs in the U.S. market, it is likely that ***'s exports to the U.S. would also increase."

The Commission requested foreign producers to describe the significance of the existing antidumping duty orders covering imports of certain bearings in terms of their effect on their firms' production capacity, production, home market shipments, exports to the United States and other markets, and inventories. (Question II-14)

Ball Bearings

***

"The antidumping order in the United States has not caused *** to alter its production, capacity, production, home market shipments, etc. Decisions concerning production-related issues are driven by other, business-related factors."

***

"The antidumping duty order has no significance on ***'s production capacity, production, home market shipments or exports to the United States or other markets."

***

"Antidumping duty orders have had no effect on our sales."

***

"Almost NO influence."

***

"***'s calculated average margin in the reviews in which it has participated has used Asahi's data has been ***%, which is *** in an investigation. Because of the ***, the antidumping duty order has had little effect on *** in terms of the stated factors."

***

"Our firm's operation remains unchanged before and after the imposition of the order because the quantity of certain ball bearings exported to the United States occupies only a very few percents in the whole production of ours."

***

"At this stage of the order's maturity, it has no real impact on the company's business."

***

"Although ball bearings are not the major product of this plant, the antidumping duty order has constrained exports to the US."

***

"No. N/A – no production."

***

"None."

***

"Before the imposition of the order we exported to ***. After the imposition of the order we discontinued trading with ***."

***

"None. Our export has been excluded all antidumping orders involving bearings from Japan since mid 1990s. By Federal Register notice dated February 28, 1995, the Commerce Department published notice of the revocation of the antidumping duty orders covering ball bearings, spherical plain bearings and cylindrical roller bearings from Japan for such bearings exported by ***. See 60 Fed. Reg. 10900 (Feb 28., 1995)."

***

"No significant impact."

***

"The existing ADD order covering imports of BBs from Japan has not significantly affected ***'s production capacity, production, home market shipments, exports to the United States and other markets, or inventories, because *** does not base its production capacity, production, shipments to Japan, the United States or Asia, or inventories relative to the ADD order. "

***

"The AD order on BBs has not been a major consideration underlying ***'s production capacity, production, home market shipments, exports (to the United States or elsewhere) or inventories. Rather, production and sales decisions are based on the supply and demand condition in the individual BB markets worldwide. Over the last few decades, *** has invested heavily in its U.S. facilities in order to attempt to meet U.S. demand for BBs through local production." However, in those instances where it was either not economically feasible to meet customer demand locally, or where U.S. demand for BBs outstripped local production, *** has exported bearings from Japan and third countries to the United States. For these reasons, ***'s exports of BBs from Japan to the United States have generally remained steady since 1989, despite the existence of the AD order.

The nature of the bearings industry lends itself to the development of long-term relationships between *** and its customers. In the home and exports markets, the large majority of ***'s customers require that they certify each *** plant producing that customer's

bearings prior to shipment. The certification process can take a year or longer, as certain prerequisites must be satisfied. For example, customers generally require that *** allow them to inspect its factories, production lines and end products. In addition, customers must approve ball bearing designs and performance, and perform testing and trial runs. These certification requirements limit ***'s ability to shift sales among markets (i.e., to and from the United States and third country markets). Moreover, customers are hesitant to change suppliers as the certification process requires a significant investment of time and resources.

In addition, in the intervening years since the imposition of the AD order, *** has increased its production of customized bearings (i.e., bearings developed and produced to individual customer specifications and for specific applications), such that customized bearings now account for over *** percent of ***'s exports of BBs from Japan, and over *** percent of ***'s U.S. production. The development of customized BB models is a length process, involving significant engineering and human resources. Due to the difficulty and time involved in the certification process, particularly in the design and development process of customized BB models, BB producers forge close relationships with their customers that neither party will readily abandon. Finally, once a bearing supplier is selected by a customer through the "bid process" to supply a particular bearing model, it becomes the primary supplier of that product to that customer. Incumbent suppliers in turn are generally give the first option to bid on future product developments for a given application. As a result of the certification process and the growth of demand for customized bearings, *** has developed long-standing, strong relationships with its Japanese customers, entirely unrelated to the U.S. AD order on BBs, relationships neither party will easily forsake.

Nor has the AD order on BBs had any measurable effect on ***'s worldwide strategy of globalization and diversification. As the data reported in response to Question II-17a indicates, less than *** percent (by quantity) of the finished BB models produced or purchased by *** in Japan in 2005 were exported to the United States. Consequently, the AD order in the United States does not drive ***'s global corporate policy or strategy. As to the U.S. market itself, *** established its U.S. presence before the order was in place. Thus, the AD may have been one factor encouraging ***'s localization efforts, but it was not the cause of the initial investment. Currently, given factors such as ***'s globalization strategy, "just in time" inventory management, and local content requirements, *** continues to invest in U.S. production regardless of the AD order. ***'s BB business has been, and will continue to be, governed by customer demands and economic conditions, not the AD order."

***

"The AD order in the U.S. does not have the effect of causing *** to alter its production capacity, production, home market shipments, etc. Decisions concerning production-related issues are driven by other, business-related factors."

***

"The antidumping duty order has no significance on ***'s production capacity, production, home market shipments or exports to the United States or other markets."

***

"We are actively sourcing bearings in the U.S. rather than exporting them to U.S. customers."

***

"The antidumping order in the United States has not caused *** to alter production, capacity, production, home market shipments, etc. Decisions concerning production-related issues are driven by other, business-related factors."

***

"None."

***

"The antidumping duty order has no significance on ***'s production capacity, production, home market shipments or exports to the United States or other markets."

***

"None."

***

"The only consequence of the antidumping duty order for the *** has been financial, increasing U.S. importation costs and increased legal costs. Other than the financial impact of the antidumping duty order, there has been no significant impact on our production capacity, production, home market shipments, etc."

***

"The portion of these exports to the USA is very low volume and they are not major segment in the use of bearing applications. Therefore, none of negative factors from the existing anti-dumping duty order significantly affects our production capacity, home market shipments, exports to the USA and other market inventories."

***

"At this stage of the order's maturity, it has no real impact upon the company's business."

***

"The antidumping duty order has no significance on ***'s production capacity, production, home market shipments or exports to the United States or other markets."

***

"Probably the sales amount of those product (***) to the US market (only) are dropped. But since applicable potential market is small, we did not see major impact before and after the imposition of antidumping duty."

***

"***."

***

"The U.S. AD order has not had an effect on ***'s production capacity, home market shipments, exports to the United States and other markets, or inventories."

***

"Some customers are telling us that orders will be sourced directly from US companies specifically to avoid the issue of AD orders."

Spherical Plain Bearings from France

***

"***."

***

"***."

Tapered Roller Bearings from China

***

"There is no significant effect to our firm."

***

"We don't have no significant change and no export to US market."

***

"We don't have any significant change."

***

"Also we have no production as an exporter."

***

"The existing antidumping duty order covering TRB from China does not have significant effect on our firm's production capacity, production, home market shipment, exports to the United States and other market, and inventories."

***

"No influence from existing antidumping duty order has been found on our factory."

***

"Our company is under normal production, antidumping has no significant effect to us."

***

"*** have not developed or increased sales in other export markets as a result of the antidumping duty order on certain tapered roller bearings from China."

***

"Most of the production in *** serves the Chinese home market and export opportunities outside the United States. Consequently, the antidumping order on TRBs from China has not affected decisions about ***'s capacity. Since ***, we are not able to provide comparison of conditions before and after the order. ***."

***

"We don't have any significant change."

***

"To my company we have almost not felt the effect from the existing antidumping order covering imports of certain tapered roller bearings from China into US, to say nothing of its significant effect. And my company had not been established before the imposition of the order as early as in 1987, so no comparison could be made in this record."

***

"The antidumping duty order has not had any affect to date on production capacity, home market shipments, exports to other countries, and inventories. If the order were to go away, it is natural to expect that production and exports to the US would increase, although such decisions would ultimately be made by *** for their respective shares of our output. Since this company and ***, there is no history before the imposition of this order."

***

"We do not have any significant change in terms of the antidumping duty."

***

"We export less and our main market is in our country."

***

"The existing US anti-dumping order has almost no negative impact on our company, which is reflected in our production and inventory from the year 2000 to 2005."

***

"No significant change."

The Commission requested foreign producers to describe any anticipated changes in their production capacity, production, home market shipments, exports to the United States and other markets, or inventories in the future if the existing antidumping duty orders were revoked. (Question II-15)

Ball Bearings

The following firms responded "No" or "None": ***.

***

"Yes. Would naturally expect some increased production and exports to the U.S. if the order were to be revoked."

***

"No. N/A – no production."

***

"No. As explained above, the AD order on BBs has not been the major consideration underlying ***'s production capacity, production, home market shipments, exports or inventories. Instead customer demand continues to function as the primary impetus driving such developments. Further, as the data reported in response to Question II-17a indicates, less than *** percent (by quantity) of the finished BB models produced or purchased by *** in Japan in 2005 were exported to the United States. In other words, the U.S. market represents only one of many components in ***'s global marketing strategy. Because consumer demand drives ***'s business decisions and because *** does not anticipate that those demands will change if the AD order on BBs is revoked, ***'s production and marketing strategies are not likely to change. Having invested significant capital and other resources to localize U.S. production, *** is committed (to the extent that it is both economically and physically feasible) to supplying the U.S. market from its local facilities in order to earn a return on this investment."

***

"In the event of revocation, would anticipate more rationalization and exports to the US."

***

"No. We would not anticipate any changes in production capacity, production, home market shipments, export to the United States and other markets, or BBs inventories in the future if the AD orders were to be revoked."

***

"No. N/A – no production."

***

"No. *** does not expect any significant changes in production capacity, production, home market shipments or U.S. exports should the antidumping duty order be revoked."

***

"Yes. Would expect additional exports to the US if the order is revoked."

***

"No. The firm would not anticipate any changes in its production capacity, production, home market shipments, exports to the United States or other markets, or inventories, in the reasonably foreseeable future if the ADD orders were to be revoked."

***

"No. N/A – no production."

Spherical Plain Bearings from France

Messier-Bugatti

"***."

SKF USA Inc.

"***."

Tapered Roller Bearings from China

The following firms responded "No" or "None": ***.

***

"No. The target market for our company is China domestic market not USA and other countries. No big change will happen in our company."

***

"Considering increasingly existing demands and as well as its big potential needs in China domestic market for tapered roller bearings, no changes will be expected in exports to US even if the antidumping duty order on certain tapered roller bearings from China were to be revoked. This point of view has already been strongly supported by the facts that these years the world bearing giants like Timken, SKF, NSK rushed into China to invest and expand their bearing production including tapered roller bearings."

***

"Yes. If the order were to be revoked, it is natural to expect that production and exports to the US would increase, although such decisions would ultimately be made by ***."

***

"No. We are not able to make forecast in this regard since we export less and no export to US market. And even if the antidumping order is revoked, no big changes will be expected in exports to US."

***

"Yes. If the antidumping duty order on Chinese TRBs is revoked, we believe that this would result in significant increases in TRB exports by other Chinese producers to the U.S. In order for our parent to be able to compete in the absence of an antidumping duty order against Chinese TRBs in the U.S. market, it is likely that ***'s exports to the U.S. would also increase."

APPENDIX E

SCOPE RULINGS

Table E-1
Antifriction bearings other than tapered roller bearings: Products determined by Commerce to be covered within the scope of the orders

Date of scope ruling(s)	Country	Requesting firm and products covered within the scope[1]
Rulings completed during the original investigation, see 54 FR 19006, 19019, May 3, 1989	Germany	Rod end bearings and parts thereof Antifriction bearings used in aviation applications Aerospace engine bearings Split cylindrical roller bearings Wheel hub units Wave generator bearings Bearings (including mounted or housed units and flanged or enhanced bearings) ultimately utilized in textile machinery)
8/6/90, *see* 55 FR 43020, Oct. 25, 1990	Germany Japan United Kingdom	Durbal GmbH, Nippon Thompson Co., and Minebea Co., Ltd. - Rod ends
8/6/90, *see* 55 FR 43020, Oct. 25, 1990	France	Valeo, Societe Anonyme - Clutch release bearings
9/14/90, *see* 55 FR 43020, Oct. 25, 1990	France	Bell Helicopter Textron, Inc. - Ball bearings used in the manufacture of helicopters
9/14/90, *see* 55 FR 43020, Oct. 25, 1990	Japan	Imprimis Technology, Inc. - Ball bearings used in the manufacture of disk drives
6/28/91, *see* 56 FR 31692, 31696, July 11, 1991	Italy	Meter S.p.A. - Load rollers and thrust rollers (forklift truck mast components) and trolley wheels and chain wheels (conveyor system components)
7/22/91, *see* 56 FR 57320, Nov. 8, 1991	Germany Germany Japan	Reifenhauser-Van Dorn Co. - Bearings imported as spare parts to rebuild gear boxes Wafios Machinery Corp. - Bearings imported as spare parts to rebuild gear boxes DHL Worldwide Express - Certain replacement “spare parts” bearings
10/25/91, *see* 57 FR 4597, Feb. 6, 1992	Italy	Meter S.p.A. - Chain sheaves (forklift truck mast components)
1-/25/91, *see* 57 FR 4597, Feb. 6, 1992	Singapore	SKF - Loose boss rollers used in textile drafting machinery, also called top rollers
3/13/92, *see* 57 FR 19602, May 7, 1992	A-100-001	Ceramic bearings
3/13/92, *see* 57 FR 19602, May 7, 1992	Italy	Federal Mogul - Roller turn rollers
3/17/92, *see* 57 FR 19602, May 7, 1992	Germany	Sachs Automotive Products - Clutch release systems that contain rolling elements

Table continued on next page.

Table E-1--*Continued*
Antifriction bearings other than tapered roller bearings: Products determined by Commerce to be covered within the scope of the orders

5/21/93, *see* 58 FR 47124, Sept. 7, 1993	Germany	INA Walzlager Schaeffler KG and INA Bearing Co., Inc. - Certain series of INA bearings (series NRB, K, RNA49, HK and AXK)
5/16/95, *see* 60 FR 36782, July 18, 1995	Japan	Nakanishi Manufacturing Corp.--Nakanishi's stamped steel washer with a zinc phosphate and adhesive coating used in the manufacture of a ball bearing
5/1/95, *see* 60 FR 36782, July 18, 1995	Germany	Consolidated Saw Mill International (CSMI) Inc. - Cambio bearings contained in CSMI's sawmill debarker
8/25/00, *see* 68 FR 7772, Feb. 18, 2003	Japan	NTN Bearing Corp. of America - Balls used in an EM Coupling

[1] All scope determinations apply to the orders for "antifriction bearings (other than tapered rollers) bearings and parts thereof from France, Germany, Italy, Japan, Singapore, and the United Kingdom."

Source: Commerce's *Scope Determination Memorandum*, official file date of April 15, 2005.

Table E-2
Antifriction bearings other than tapered roller bearings: Products determined by Commerce to be excluded from the scope of the orders[1] [2]

Date of scope ruling(s)	Country	Requesting firm and products excluded from the scope
Rulings completed during the original investigation, *see* 54 FR 19006, 19019, May 3, 1989	Germany	Plain bearings other than spherical plain bearings Airframes components unrelated to the reduction of friction Linear motion devices Split pillow block housings Nuts, bolts, and sleeves that are not integral parts of a bearing or attached to a bearing under review Thermoplastic bearings Stainless steel hollow balls Textile machinery components that are substantially advanced in function(s) or value Wheel hub units imported as part of front and rear axle assemblies; wheel hub units that include tapered roller bearings; and clutch release bearings that are already assembled as parts of transmission Slewing rings and slewing bearings
5/10/90, *see* 55 FR 42750, Oct. 23, 1990	Germany	SKF Textile Products, Inc. - Antifriction bearings, including integral shaft ball bearings, used in textile machinery and imported with attachments and augmentations sufficient to advance their function beyond load-bearing/friction-reducing capability (SKF models: FL 11-014239; FL 11-013834; FL 11-013832; FL 11-014238; FL 11-014237; FL 97-017895; FL 98-017896; FL 113-017897; FL 114-017898; FL 66-104339; CK 668-012083; CK 668-012084; CK 668-013334; TL 225-012411; AW 12-014269; SR 23-008537; SR 23-012691; SR 23-953906; SR 23-953801; SR 23-953802; SR 23-953901; SR 23-953905; SR 24-954051; SR 9; FL 11-013832; FL 11-013833; FL 11-013834; FL 15-014956; FL 15-014964; TL 225-022489; TL 225-022486; TL225-022485; TL 225-024121; CK 12-016446; CK 12-030848; CK 12-16446; CK 12-030848; LE 222-013405; LE 222-022647; LE 222-027128; DR 1918-014623; ZL 18-010975; ZL 20-018667; SR 7-953001; SR 45-017747; SR 45-028044; SR 28-01247; SR 28-012474; SR 23-954031; SR 23-954032; SR-954034; SR 23-954035; SR 23-010058; SR 23-020650; SR 23-953801; SR 23-954030; SR 24-954051; and SR 35-954151)
5/23/91, *see* 56 FR 36774, Aug. 1, 1991	Germany	FAG Kugelfischer Georg Schaefer KGaA - Textile machinery components including false twist spindles, belt guide rollers, separator rollers, damping units, rotor units, and tension pulleys (model numbers: 12.127, 12.128, 12.155, 12.157, 12.158, 12.205, 12.264, 12.265, 12.301, 326.27, VR 2147-3, VR 2158-1, VR2158, VR 2158-3, VR 2177, VR 2177-01, VR 2177-13, TL 2256-04.00000.01, TL 2256-04.00101, TL 2256-04.00101.01, TL 2256-18.00.240.19, TL 2256-14.00.100, 12.150, 12.270, 12.272, 12.273,12.274, LR 2396, 12.200, SW 18202-1, SW 18261-1, SW 23180-6, SW 23227-6, SW23277-6, FR 3.21, FR 1310, RZ 70-9, RZ 70-20, RZ 90, and SL 1625)
8/8/91, *see* 56 FR 57320, Nov. 8, 1991	Germany	Textilmaschinen-Komponenten GmbH and SKF Textile Products, Inc. - Certain rotor assembly textile machinery components (rotor assembly numbers TE-226-0036225 and TE-226-1246788)
8/26/91, *see* 56 FR 57320, Nov. 8, 1991	United Kingdom	Essco, Inc. - Linear motion bearings

Table continued on next page.

Table E-2--*Continued*
Antifriction bearings other than tapered roller bearings: Products determined by Commerce to be excluded from the scope of the orders[1] [2]

3/17/92, *see* 57 FR 19602, May 7, 1992	Germany	Sachs Automotive Products - Clutch release systems that do not contain rolling elements (Sachs models GK-1, Gr.1, GK-2, Gr.0, and Gr.2)
3/31/92, *see* 57 FR 19602, May 7, 1992	Italy	Wolf D. Barth Co. and SKF Component System Co. - Chrome steel balls for use as check valves in hydraulic valve systems
5/18/92, *see* 57 FR 32973, July 24, 1992	Italy	IBC Bearing Co. - Stainless steel balls for non-bearing use (in an optical polishing process)
6/19/92, *see* 57 FR 32973, July 24, 1992	Germany	Allergan Medical Optics - Finished, semi-ground stainless steel balls
9/25//92, *see* 57 FR 57420, Dec. 4, 1992	Germany	SKF - Certain textile machinery components
10/27/92, *see* 58 FR 11209, Feb. 24, 1993	Japan	Brand Technologies - Certain cartridge assemblies comprised of a machine shaft, a machined housing and two standard bearings
5/8/93, *see* 58 FR 47124, Sept. 7, 1993	Japan	Nippon Pillow Block Sales Co. - Certain eccentric locking collars that are part of housed bearings units
5/17/93, *see* 58 FR 47124, Sept. 7, 1993	United Kingdom	Sinclair International - SAR series of ball bearings
12/23/93, *see* 59 FR 8910, Feb. 24, 1994	Italy	Fiber Services - Certain textile machinery components
6/6//94, see 59 FR 54888, Nov. 2, 1994	Germany	SKF - Certain textile machinery components
12/05/94, *see* 60 FR 12196, Mar. 6, 1995	Germany	Rotek and Kaydon - Rotek bearings, models M4 and L6, are slewing rings and, therefore, outside of the scope of the order
3/21/96, *see* 61 FR 18381, Apr. 25, 1996	Germany	Marquardt Switches - Medium carbon steel balls imported by Marquardt
6/26/96, *see* 61 FR 40194, Aug. 1, 1996	Japan	Dana Corp. - Automotive component, known variously as a center bracket assembly, center bearings assemble, support bracket, or shaft supporting bearing
Pending, *see* 61 FR 40194, Aug. 1, 1996	Germany	Enkotec Co., Inc. - “Main bearings” imported for incorporation into Enkotec Rotary Nail Machine are slewing rings and, therefore, outside the scope of the order

Table continued on next page.

Table E-2--*Continued*
Antifriction bearings other than tapered roller bearings: Products determined by Commerce to be excluded from the scope of the orders[1] [2]

2/10/97 *see* 62 FR 30569, June 4, 1997	Japan Singapore	Rockwell International Corp. - Automotive components, known variously as a cushion suspension units, cushion assembly units, or center bearing assemblies
12/14/99, *see* 65 FR 41957, July 7, 2000	Japan	Sanden International (USA) - Certain orbiting and fixed races, and orbiting and fixed rings used in a “rotation prevention device”
1/19/99, *see* 65 FR 41957, July 7, 2000	Japan	Nissei Sangyo America, Ltd. - Certain vacuum nozzle assembly, designated as part 630-063-2316
2/26/99, *see* 65 FR 41957, July 7, 2000	Germany	Holland Hitch, Inc. - “Turntable bearing” (slewing rings, gearless slewing rings, or slewing bearings)
3/13/00, *see* 65 FR 41957, July 7, 2000	Japan	Isuzu Motors America, Inc. - Fan center assembly, designed as part 8-97226- 2892 and imported primarily for use in a V-8 diesel engine
5/1/00, *see* 65 FR 52409, Aug. 29, 2000	Japan	NTN Bearing Corp. of America - EM Coupling, a “rotation prevention device” and ring plates used in the EM Coupling
5/26/00, *see* 65 FR 52409, Aug. 29, 2000	Japan	Subaru-Isuzu Automotive, Inc., - Fan bracket assembly, designated as part 8971486750 (prior to Oct. 1, 1999) and as part 8972317180 (from Oct. 1, 1999 onward) and used in the cooling system of six-cylinder vehicles
2/12/01, *see* 68 FR 7772, Feb. 18, 2003	Japan	Sanden International (USA) - Parts of EM Coupling, identified as an orbiting EM plate and a fixed EM plate
7/9/01, *see* 68 FR 7772, Feb. 18, 2003	Japan	NTN Corp. and NTN Bearing Corp. of America, NTN Driftshaft, Inc., NTN-Bower Corp., and NTN-BCA Corp. - Turntable Slewing Bearings used in CT scan machines
8/9/01, *see* 68 FR 7772, Feb. 18, 2003	France	Saint-Gobain Ceramics and Plastics, Inc. - Ceramic ball blanks used in the production of balls
10/1/01, *see* 68 FR 7772, Feb. 18, 2003	Germany	TEMCO Textilmaschinenkomponenten GmbH and Petree & Stoudt Associates, Inc. - Certain textile machinery components

[1] List does not include those products that Commerce determined to be covered by the antidumping duty orders.
[2] All scope determinations apply to the orders for "antifriction bearings (other than tapered rollers) bearings and parts thereof from France, Germany, Italy, Japan, Singapore, and the United Kingdom."

Source: Commerce’s *Scope Determination Memorandum*, official file date of April 15, 2005.

APPENDIX F

EXCHANGE RATE GRAPHS

Figure F-1
Exchange rates: Index of the nominal exchange rate between Chinese yuan and the U.S. dollar, by quarters, January 2000-December 2005

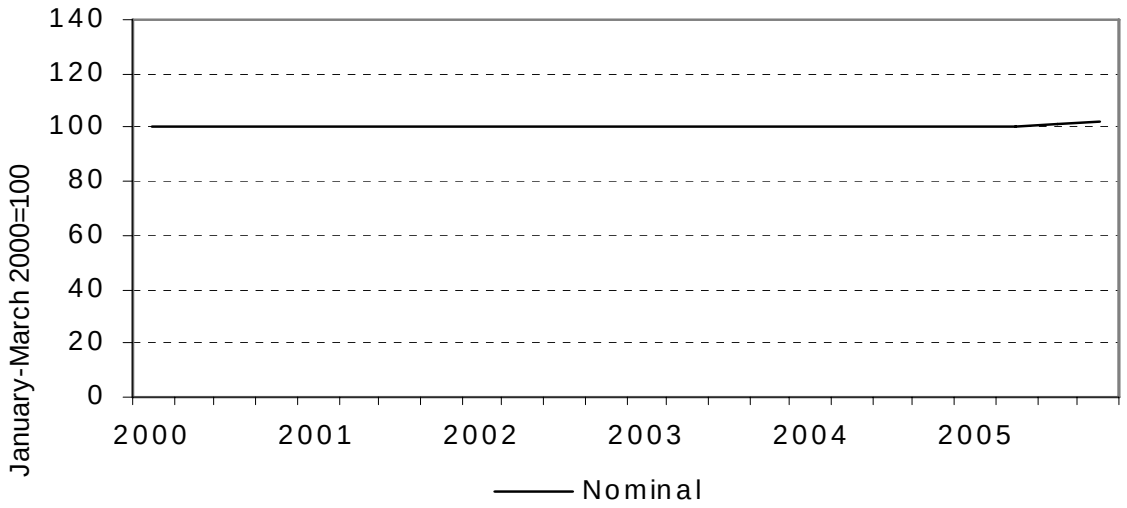

Note- A rising trend indicates the yuan is appreciating against the dollar.

Source: International Monetary Fund, *International Financial Statistics,* February 2006 and June 2006 (retrieved from imfstatistics.org)

Figure F-2
Exchange rates: Indices of the nominal and real exchange rates (for France) between the euro and the U.S. dollar, by quarters, January 2000-December 2005

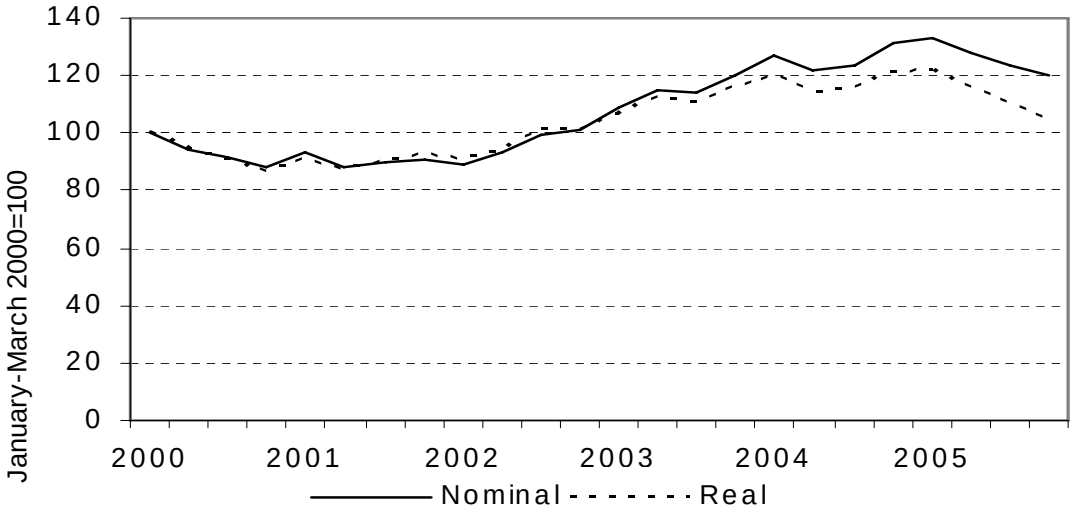

Note- A rising trend indicates the euro is appreciating against the dollar. Real rate considers French prices.

Source: International Monetary Fund, *International Financial Statistics,* February 2006 and June 2006 (retrieved from imfstatistics.org)

Figure F-3
Exchange rates: Indices of the nominal and real exchange rates between the euro (for Germany) and the U.S. dollar, by quarters, January 2000-December 2005

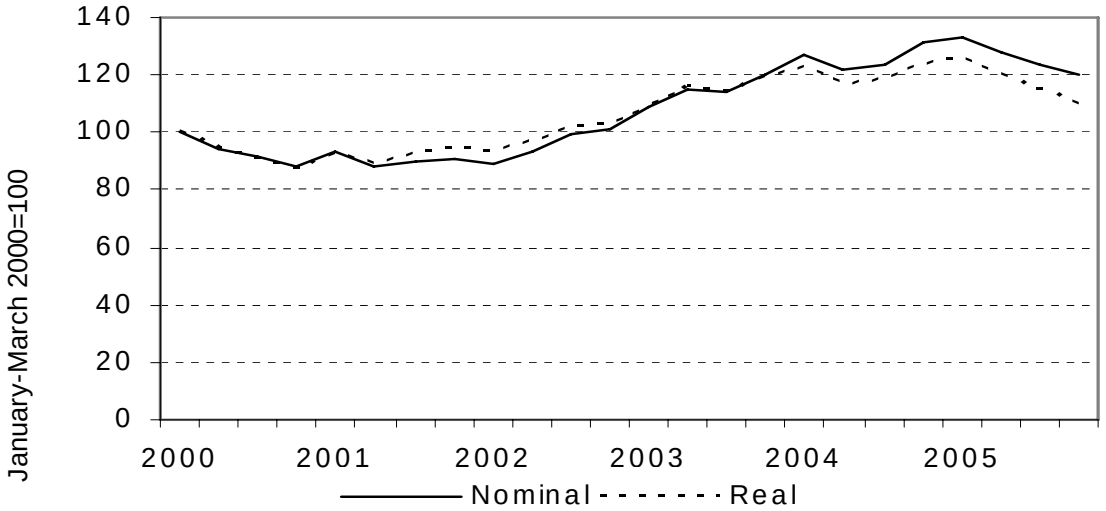

Note- A rising trend indicates the euro is appreciating against the dollar. Real rate considers German prices.

Source: International Monetary Fund, *International Financial Statistics,* February 2006 and June 2006 (retrieved from imfstatistics.org)

Figure F-4
Exchange rates: Indices of the nominal and real exchange rates between the euro (for Italy) and the U.S. dollar, by quarters, January 2000-December 2005

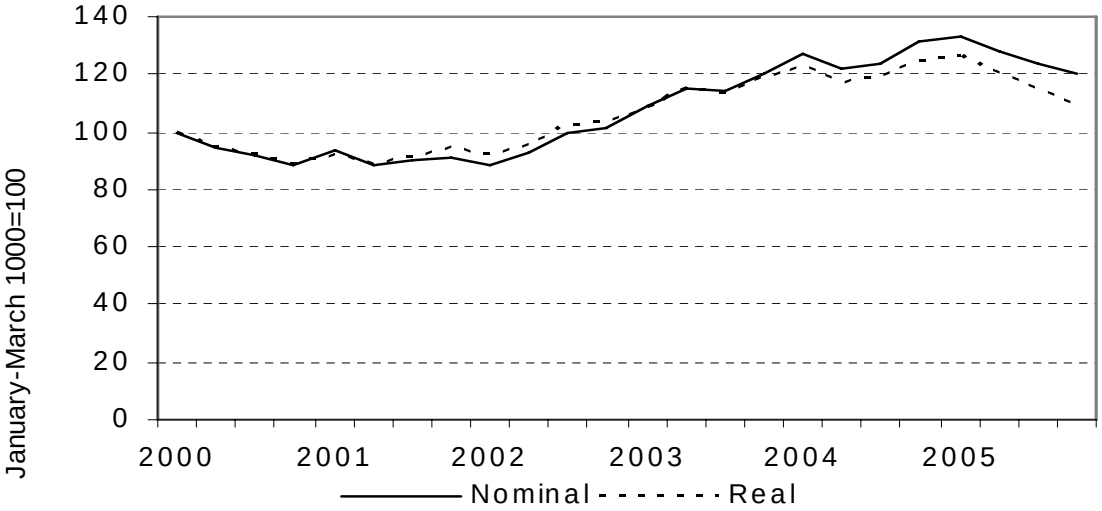

Note- A rising trend indicates the euro is appreciating against the dollar. Real rate considers Italian prices.

Source: International Monetary Fund, *International Financial Statistics,* February 2006 and June 2006 (retrieved from imfstatistics.org)

Figure F-5
Exchange rates: Indices of the nominal and real exchange rates between the Japanese yen and the U.S. dollar, by quarters, January 2000-December 2005

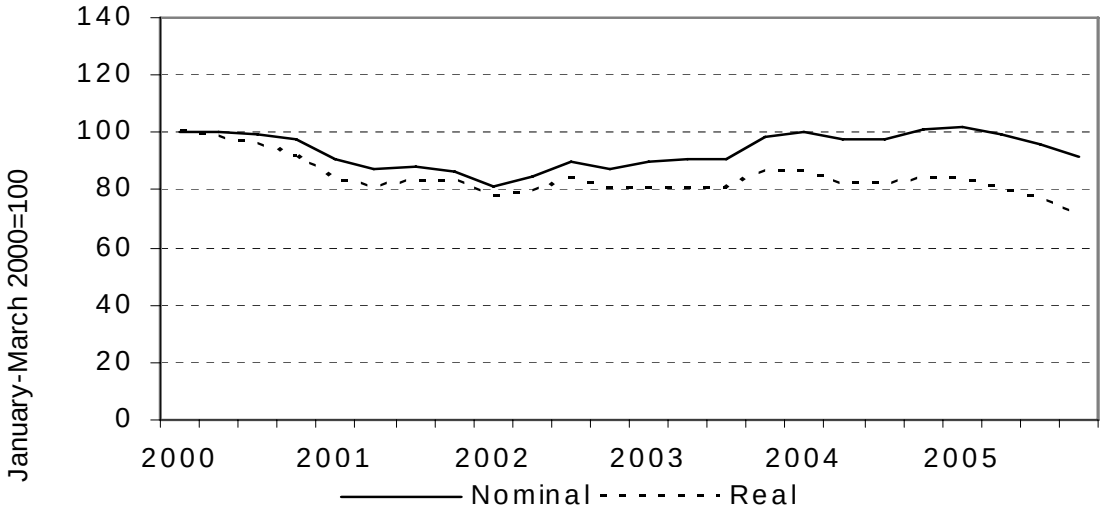

Note- A rising trend indicates the yen is appreciating against the dollar. Real rate considers Japanese prices.

Source: International Monetary Fund, *International Financial Statistics,* February 2006 and June 2006 (retrieved from imfstatistics.org)

Figure F-6
Exchange rates: **Indices of the nominal and real exchange rates between the Singaporean dollar and the U.S. dollar, by quarters, January 2000-December 2005**

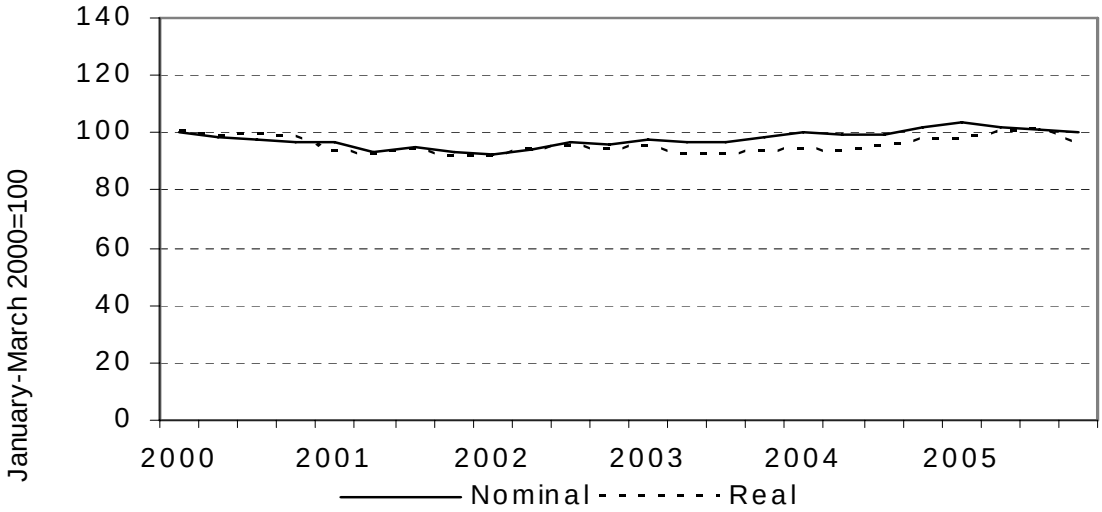

Note- A rising trend indicates the Singaporean dollar is appreciating against the dollar. Real rate considers Singaporean prices

Source: International Monetary Fund, *International Financial Statistics,* February 2006 and June 2006 (retrieved from imfstatistics.org)

Figure F-7

Exchange rates: Indices of the nominal and real exchange rates between the United Kingdom pound and the U.S. dollar, by quarters, January 2000-December 2005

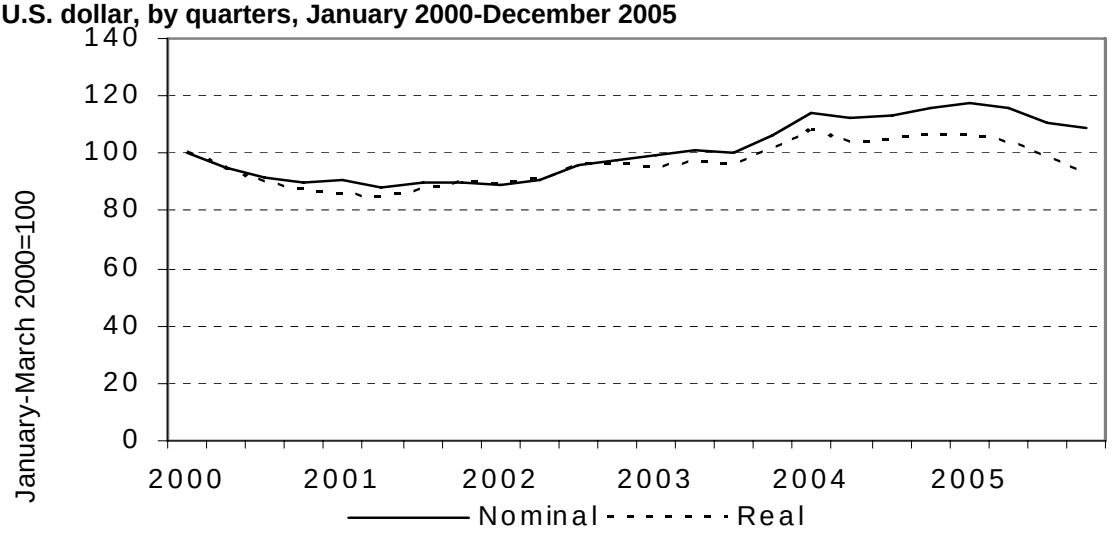

Note- A rising trend indicates the pound is appreciating against the dollar. Real rate considers U.K. prices.

Source: International Monetary Fund, *International Financial Statistics,* February 2006 and June 2006 (retrieved from imfstatistics.org)

APPENDIX G

ADDITIONAL TRB PRICING DATA

Table G-1
Tapered roller bearings: Weighted-average f.o.b. prices and quantities as reported by U.S. producers and importers of product 1, with margins of underselling/(overselling) for sales prices, by quarters, January 2000-December 2005

* * * * * * *

Table G-2
Tapered roller bearings: Weighted-average f.o.b. prices and quantities as reported by U.S. producers and importers of product 2, with margins of underselling/(overselling) for sales prices, by quarters, January 2000-December 2005

* * * * * * *

Table G-3
Tapered roller bearings: Weighted-average f.o.b. prices and quantities as reported by U.S. producers and importers of product 3, with margins of underselling/(overselling) for sales prices, by quarters, January 2000-December 2005

* * * * * * *

Table G-4
Tapered roller bearings: Weighted-average f.o.b. prices and quantities as reported by U.S. producers and importers of product 4, with margins of underselling/(overselling) for sales prices, by quarters, January 2000-December 2005

* * * * * * *

Table G-5
Tapered roller bearings: Weighted-average f.o.b. prices and quantities as reported by U.S. producers and importers of product 5, with margins of underselling/(overselling) for sales prices, by quarters, January 2000-December 2005

* * * * * * *

Table G-6
Tapered roller bearings: Weighted-average f.o.b. prices and quantities as reported by U.S. producers and importers of product 6, with margins of underselling/(overselling) for sales prices, by quarters, January 2000-December 2005

* * * * * * *

Table G-7
Tapered roller bearings: Weighted-average f.o.b. prices and quantities as reported by U.S. producers and importers of product 7, with margins of underselling/(overselling) for sales prices, by quarters, January 2000-December 2005

* * * * * * *

Table G-8
Tapered roller bearings: Weighted-average f.o.b. prices and quantities as reported by U.S. producers and importers of product 8, with margins of underselling/(overselling) for sales prices, by quarters, January 2000-December 2005

* * * * * * *

Table G-9
Tapered roller bearings: Weighted-average f.o.b. prices and quantities as reported by U.S. producers and importers of product 9, with margins of underselling/(overselling) for sales prices, by quarters, January 2000-December 2005

* * * * * * *

Table G-10
Tapered roller bearings: Weighted-average f.o.b. prices and quantities as reported by U.S. producers and importers of product 10, with margins of underselling/(overselling) for sales prices, by quarters, January 2000-December 2005

* * * * * * *

APPENDIX H

ADDITIONAL BB PRICING DATA

Table H-1
Ball bearings: Weighted-average f.o.b. prices and quantities for sales to distributors, as reported by U.S. producers and importers of product 11, with margins of underselling/(overselling) for sales prices, by quarters, January 2000-December 2005

* * * * * * *

Table H-2
Ball bearings: Weighted-average f.o.b. prices and quantities for sales to end users, as reported by U.S. producers and importers of product 11, with margins of underselling/(overselling) for sales prices, by quarters, January 2000-December 2005

* * * * * * *

Table H-3
Ball bearings: Weighted-average f.o.b. prices and quantities for sales to distributors, as reported by U.S. producers and importers of product 12, with margins of underselling/(overselling) for sales prices, by quarters, January 2000-December 2005

* * * * * * *

Table H-4
Ball bearings: Weighted-average f.o.b. prices and quantities for sales to end users, as reported by U.S. producers and importers of product 12, with margins of underselling/(overselling) for sales prices, by quarters, January 2000-December 2005

* * * * * * *

Table H-5
Ball bearings: Weighted-average f.o.b. prices and quantities for sales to distributors, as reported by U.S. producers and importers of product 13, with margins of underselling/(overselling) for sales prices, by quarters, January 2000-December 2005

* * * * * * *

Table H-6
Ball bearings: Weighted-average f.o.b. prices and quantities for sales to end users, as reported by U.S. producers and importers of product 13, with margins of underselling/(overselling) for sales prices, by quarters, January 2000-December 2005

* * * * * * *

Table H-7
Ball bearings: Weighted-average f.o.b. prices and quantities for sales to end users, as reported by U.S. producers of product 14, with margins of underselling/(overselling) for sales prices, by quarters, January 2000-December 2005

* * * * * * *

Table H-8
Ball bearings: Weighted-average f.o.b. prices and quantities for sales to distributors, as reported by U.S. producers and importers of product 15, with margins of underselling/(overselling) for sales prices, by quarters, January 2000-December 2005

* * * * * * *

Table H-9
Ball bearings: Weighted-average f.o.b. prices and quantities for sales to end users, as reported by U.S. producers of product 15, with margins of underselling/(overselling) for sales prices, by quarters, January 2000-December 2005

* * * * * * *

Table H-10
Ball bearings: Weighted-average f.o.b. prices and quantities for sales to distributors, as reported by U.S. producers and importers of product 16, with margins of underselling/(overselling) for sales prices, by quarters, January 2000-December 2005

* * * * * * *

Table H-11
Ball bearings: Weighted-average f.o.b. prices and quantities for sales to end users, as reported by U.S. producers and importers of product 16, with margins of underselling/(overselling) for sales prices, by quarters, January 2000-December 2005

* * * * * * *

Table H-12
Ball bearings: Weighted-average f.o.b. prices and quantities for sales to distributors, as reported by U.S. importers of product 17, with margins of underselling/(overselling) for sales prices, by quarters, January 2000-December 2005

* * * * * * *

Table H-13
Ball bearings: Weighted-average f.o.b. prices and quantities for sales to end users, as reported by U.S. importers of product 17, with margins of underselling/(overselling) for sales prices, by quarters, January 2000-December 2005

* * * * * * *

Table H-14
Ball bearings: Weighted-average f.o.b. prices and quantities for sales to distributors, as reported by U.S. producers and importers of product 18, with margins of underselling/(overselling) for sales prices, by quarters, January 2000-December 2005

* * * * * * *

Table H-15
Ball bearings: Weighted-average f.o.b. prices and quantities for sales to end users, as reported by U.S. producers and importers of product 18, with margins of underselling/(overselling) for sales prices, by quarters, January 2000-December 2005

* * * * * * *

Table H-16
Ball bearings: Weighted-average f.o.b. prices and quantities for sales to distributors, as reported by U.S. producers of product 19, with margins of underselling/(overselling) for sales prices, by quarters, January 2000-December 2005

* * * * * * *

Table H-17

Ball bearings: Weighted-average f.o.b. prices and quantities for sales to end users, as reported by U.S. producers of product 19, with margins of underselling/(overselling) for sales prices, by quarters, January 2000-December 2005

* * * * * * *

Table H-18
Ball bearings: Weighted-average f.o.b. prices and quantities for sales to distributors, as reported by U.S. producers and importers of product 20, with margins of underselling/(overselling) for sales prices, by quarters, January 2000-December 2005

* * * * * * *

Table H-19
Ball bearings: Weighted-average f.o.b. prices and quantities for sales to end users, as reported by U.S. producers and importers of product 20, with margins of underselling/(overselling) for sales prices, by quarters, January 2000-December 2005

* * * * * * *