In the Matter of

CERTAIN HIGH INTENSITY RETROREFLECTIVE SHEETING

Investigation No. 337-TA-268

USITC PUBLICATION 2121

SEPTEMBER 1988

United States International Trade Commission · Washington, DC 20436

UNITED STATES INTERNATIONAL TRADE COMMISSION

COMMISSIONERS

Anne E. Brunsdale, Acting Chairman
Alfred E. Eckes
Seeley G. Lodwick
Susan Liebeler
David B. Rohr
Ronald A. Cass

Address all communications to
Kenneth R. Mason, Secretary to the Commission
United States International Trade Commission
Washington, DC 20436

UNITED STATES INTERNATIONAL TRADE COMMISSION
Washington, DC 20436

In the Matter of CERTAIN HIGH INTENSITY RETROREFLECTIVE SHEETING	)	Investigation No. 337-TA-268

NOTICE OF ISSUANCE OF LIMITED EXCLUSION ORDER
AND CEASE AND DESIST ORDER

AGENCY: The U.S. International Trade Commission.

ACTION: The Commission has determined to issue a limited exclusion order and a cease and desist order in the above-captioned investigation.

AUTHORITY: The authority for the Commission's action is contained in section 337 of the Tariff Act of 1930 (19 U.S.C. § 1337) and in sections 210.53-.58 of the Commission Rules of Practice and Procedure (19 C.F.R. §§ 210.53-.58).

SUMMARY: Having determined that the issues of remedy, the public interest, and bonding are properly before the Commission, and having reviewed the written submissions filed on remedy, the public interest, and bonding, as well as those portions of the record relating to those issues, the Commission has determined to issue (1) a limited exclusion order prohibiting the entry into the United States, except under license, of high intensity retroreflective sheeting manufactured abroad by respondent Seibu Polymer Chemical Co., Ltd. which infringes claims 1, 3-5, or 7 of U.S. Letters Patent 4,025,159 (the '159 patent), and (2) a cease and desist order prohibiting respondent Seibulite International Inc. from marketing, distributing, selling, or offering for sale in the United States imported high intensity retroreflective sheeting which infringes the '159 patent.

The Commission has further determined that the public interest factors enumerated in sections 337(d) and (f) (19 U.S.C. §§ 1337(d) and (f)) do not preclude issuance of the aforementioned limited exclusion order and cease and desist order and that the bond during the Presidential review period should be in the amount of 8.5 percent of the entered value of the articles concerned.

FOR FURTHER INFORMATION CONTACT: Laurie B. Horvitz, Esq., Office of the General Counsel, U.S. International Trade Commission, telephone 202-252-1107.

SUPPLEMENTARY INFORMATION: On June 2, 1987, Minnesota Mining and Manufacturing Company (3M) filed a complaint pursuant to section 337 alleging the unlawful importation and sale of certain high intensity retroreflective sheeting. 3M alleged that Seibu Polymer Chemical Co., Ltd. and Seibulite International Inc. were infringing certain claims of its '159 patent and that the effect or tendency of their unfair methods of competition and unfair

acts was to destroy or substantially injure an industry, efficiently and economically operated, in the United States. The Commission instituted an investigation and named Seibu Polymer Chemical Co., Ltd. and Seibulite International Inc. as respondents.

On April 15, 1988, the presiding administrative law judge issued his final initial determination (ID) finding a violation of section 337. On May 26, 1988, the Commission issued a notice of nonreview of the ID. The parties and interested members of the public were requested to file briefs on remedy, the public interest, and bonding. Notice of the Commission's decision not to review the ID was published in the Federal Register, 53 Fed. Reg. 20189 (June 2, 1988). Complainant, respondents, the Commission investigative attorney, and eight nonparties filed submissions.

Copies of the Commission's limited exclusion order and cease and desist order, the Commission Opinion in support thereof, and all other nonconfidential documents filed in connection with this investigation are available for inspection during official business hours (8:45 a.m. to 5:15 p.m.) in the Office of the Secretary, U.S. International Trade Commission, 500 E Street SW., Washington, DC 20436, telephone 202-252-1000. Hearing-impaired individuals are advised that information on this matter can be obtained by contacting the Commission's TDD terminal on 202-252-1805.

By order of the Commission.

Kenneth R. Mason
Secretary

Issued: July 15, 1988

UNITED STATES INTERNATIONAL TRADE COMMISSION
Washington, DC 20436

In the Matter of CERTAIN HIGH INTENSITY RETROREFLECTIVE SHEETING	)	Investigation No. 337-TA-268

ORDER

Background

On June 2, 1987, Minnesota Mining and Manufacturing Company (3M) filed a complaint pursuant to section 337 of the Tariff Act of 1930 (19 U.S.C. § 1337) alleging the unlawful importation and sale of certain high intensity retroreflective sheeting. 3M alleged that Seibu Polymer Chemical Co., Ltd. of Tokyo, Japan and Seibulite International Inc. of Rancho Dominguez, California were infringing certain claims of its U.S. Letters Patent 4,025,159 and that the effect or tendency of their unfair methods of competition and unfair acts was to destroy or substantially injure an industry, efficiently and economically operated, in the United States. The Commission instituted an investigation and named Seibu Polymer Chemical Co., Ltd. and Seibulite International Inc. as respondents.

On April 15, 1988, the presiding administrative law judge issued his final initial determination (ID) finding a violation of section 337. On May 26, 1988, the Commission issued a notice of nonreview of the ID. The parties and interested members of the public were requested to file briefs on remedy, the public interest, and bonding. Complainant, respondents, the Commission investigative attorney, and eight nonparties filed submissions.

Order

Having considered the submissions filed and the record in this investigation, and having concluded that the issues of remedy, the public interest, and bonding are properly before the Commission, it is HEREBY ORDERED that--

1. High intensity retroreflective sheeting manufactured by or on behalf of respondent Seibu Polymer Chemical Co., Ltd., No. 5-26, Kami-Ikebukro, 2-Chome, Toshima-ku, Toyko-170, Japan, or any successor, assign, affiliated persons or companies, parents, subsidiaries or other related business entities which infringes claims 1, 3, 4, 5 or 7 of U.S. Letters Patent 4,025,159 is excluded from entry into the United States for the remaining term of that patent except under license from the owner of said patent;

2. The high intensity retroreflective sheeting ordered to be excluded from entry into the United States shall be entitled to entry under bond in the amount of 8.5 percent of the entered value of the high intensity retroreflective sheeting from the day after this order is received by the President pursuant to subsection (g) of section 337 of the Trade Act of 1930 (19 U.S.C. § 1337(g)), until such time as the President notifies the Commission that he approves or disapproves this action but, in any event no later than 60 days after the date of receipt of this order;

3. Respondent Seibulite International, Inc. shall cease and desist from marketing, distributing, selling, or offering for sale in the United States imported infringing high intensity retroreflective sheeting, as provided in the cease and desist order attached hereto;

4. The public interest factors enumerated in sections 337(d) and (f) do not preclude the issuance of the aforementioned limited exclusion order and cease and desist order;

5. Respondents' request for an oral hearing on remedy is denied;

6. Notice of this Order shall be published in the Federal Register;

7. A copy of this Order, and the Commission Opinion in support thereof, shall be served upon each party of record in this investigation and upon the Department of Health and Human Services, the Department of Justice, the Federal Trade Commission, and the Secretary of the Treasury; and

8. The Commission may amend this Order in accordance with the procedure described in section 211.57 of the Commission's Rules of Practice and Procedure, 19 C.F.R. § 211.57.

By order of the Commission.

Kenneth R. Mason
Secretary

Issued: July 15, 1988

UNITED STATES INTERNATIONAL TRADE COMMISSION
Washington, DC 20436

In the Matter of CERTAIN HIGH INTENSITY RETROREFLECTIVE SHEETING	)	Investigation No. 337-TA-268

ORDER TO CEASE AND DESIST

IT IS HEREBY ORDERED THAT Seibulite International, Inc., 3136 East Victoria Street, Rancho Dominguez, California 90221, cease and desist from marketing, distributing, selling, or offering for sale in the United States certain imported high intensity retroreflective sheeting in violation of section 337 of the Tariff Act of 1930 (19 U.S.C. § 1337).

I

(Definitions)

As used in this Order:

(A) "Commission" shall mean the United States International Trade Commission.

(B) "Complainant" shall mean Minnesota Mining & Manufacturing Co., 3M Center, St. Paul, Minnesota 55133.

(C) "Respondent" shall mean Seibulite International, Inc., 3136 East Victoria Street, Rancho Dominguez, California 90221.

(D) "Person" shall mean an individual, or any non-governmental partnership, firm, association, corporation or other legal or business entity

other than the above Respondent or its majority owned and/or controlled subsidiaries, their successors or assigns.

(E) "United States" shall mean the fifty States, the District of Columbia, and Puerto Rico.

(F) "Imported high intensity retroreflective sheeting" shall mean high intensity retroreflective sheeting that is manufactured in any country other than the United States and imported into the United States and which is manufactured by or on behalf of Seibu Polymer Chemical Co., Ltd. or any successor, assign, affiliated persons or companies, parents, subsidiaries or other related business entities.

II

(Applicability)

The provisions of this Cease and Desist Order shall apply to Respondent and to its principals, stockholders, officers, directors, employees, agents, licensees, distributors, controlled (whether by stock ownership or otherwise) and/or majority owned business entities, successors and assigns, and all those persons acting in concert with any of the foregoing who receive actual notice of this Order in accordance with Section VI hereof.

III

(Conduct Prohibited)

The following conduct of Respondent is prohibited by this Order—

1. Respondent shall not, for the remaining term of U.S. Letters Patent 4,025,159, i.e., until May 24, 1994, engage in the marketing, distribution, sale, or offer for sale of imported high intensity retroreflective sheeting in the United States which infringes claims 1, 3, 4, 5 or 7 of U.S. Letters Patent 4,025,159.

IV

(Conduct Permitted)

Notwithstanding any other provision of this Order, specific conduct otherwise prohibited by the terms of this Order shall be permitted if, in a written instrument, such specific conduct is licensed or authorized by Complainant.

V

(Compliance and Inspection)

(A) For the purposes of securing compliance with this Order, Respondent shall retain any and all records relating to the importation, sale, offer for sale, or distribution in the United States of imported high intensity retroreflective sheeting made and received in the usual and ordinary course of its business, whether in detail or in summary form, for a period of three (3) years from the close of the fiscal year to which they pertain.

(B) For the purpose of determining or securing compliance with this order, and for no other purpose, and subject to any privilege recognized by federal courts of the United States, duly authorized representatives of the Commission shall, upon reasonable written notice by the Commission or its staff, be permitted access and the right to inspect and copy in Respondent's principal offices during the office hours of Respondent, and in the presence of counsel or other representative if Respondent so chooses, all books, ledgers, accounts, correspondence, memoranda, and other records and documents, both in detail and in summary form as are required by Paragraph V(A) hereof to be retained.

VI

(Service of Cease and Desist Order)

Respondent is ordered and directed to:

(A) Serve, within thirty (30) days after the effective date of this Order, a conformed copy of this Order upon each of its respective officers, directors, managing agents, agents and employees who have any responsibility for the importation, distribution or sale of imported high intensity retroreflective sheeting in the United States;

(B) Serve, within thirty (30) days after the succession of any of the persons referred to in section VI(A) above, a conformed copy of this Order upon each successor; and

(C) Maintain such records as will show the name, title, and address of each person upon whom the Order has been served, as described in section VI(A) and (B) above, together with the date on which service was made.

The obligations set forth in section VI(B) and (C) above shall remain in effect until the expiration of U.S. Letters Patent 4,025,159.

VII

(Enforcement)

Violation of this Order may result in any of the actions specified in 19 C.F.R. § 1337(f)), and such other action as the Commission may deem appropriate.

In determining whether Respondent is in violation of this Order, the Commission may infer facts adverse to Respondent if Respondent fails to provide adequate or timely information.

VIII

(Modification)

This Order may be modified by the Commission in accordance with the procedure described in section 211.57 of the Commission's Rules of Practice and Procedure. 19 C.F.R § 211.57.

By order of the Commission.

Kenneth R. Mason
Secretary

Issued: July 15, 1988

UNITED STATES INTERNATIONAL TRADE COMMISSION
Washington, DC 20436

In the Matter of CERTAIN HIGH INTENSITY RETROREFLECTIVE SHEETING	)	Investigation No. 337-TA-268

COMMISSION OPINION ON REMEDY, PUBLIC INTEREST, AND BONDING

On April 15, 1988, the presiding administrative law judge (ALJ) (Judge Luckern) issued his final initial determination (ID) in this investigation finding a violation of section 337 of the Tariff Act of 1930, 19 U.S.C. § 1337, in the unauthorized importation and sale of certain high intensity retroreflective sheeting by reason of infringement of claims 1, 3-5, and 7 of U.S. Letters Patent 4,025,159 ('159 patent), with the tendency to destroy or substantially injure an industry, efficiently and economically operated, in the United States.

On May 26, 1988, the Commission issued a notice of nonreview of the ID, 53 Fed. Reg. 20189 (June 2, 1988), thereby adopting the ID as its own. The parties and interested members of the public were requested to file briefs on the issues of remedy, the public interest, and bonding. Complainant, respondents, and the Commission investigative attorney (IA) each submitted a brief and reply brief regarding the issues identified in the Commission's

notice. In addition, eight nonparties submitted public interest comments. 1/

SUMMARY

Having examined the submissions on remedy, public interest, and bonding, and the relevant portions of the record relating to those issues, the Commission concludes that the appropriate remedy in this case is the issuance of (1) a limited exclusion order prohibiting the importation, except under license, of high intensity retroreflective sheeting manufactured by respondent Seibu Polymer Chemical Co., Ltd. (Seibu Polymer) that infringes claims 1, 3-5, or 7 of the '159 patent, and (2) a cease and desist order prohibiting respondent Seibulite International, Inc. from marketing, distributing, selling, or offering for sale in the United States its inventories of imported infringing sheeting in the United States. 2/ The Commission has reviewed the public interest factors enumerated in sections 337(d) and (f) and has concluded that those factors do not preclude issuance of the aforementioned remedial orders. The Commission has also decided that the bond during the

---

1/ Public interest comments were submitted by the following: (1) The Mike Madrid Co., Inc., Lafayette, Indiana (highway safety contractors); (2) FLASHER, Salt Lake City, Utah (manufacturer of construction and highway signs); (3) Michigan Department of Transportation; (4) Wisconsin Department of Transportation, Madison, Wisconsin; (5) Warning Lites of Illinois, Inc., Addison, Illinois; (6) Newman Signs, Inc., Jamestown, North Dakota; (7) Road Light, Inc., Smithfield, Rhode Island; and (8) Traffic Sign Co., Cuero, Texas.

2/ Commissioner Eckes and Commissioner Lodwick do not agree that the appropriate remedies in this investigation should include a cease and desist order and believe that only an exclusion order should issue. The bases for this position are fully set fourth in Certain Compound Action Metal Cutting Snips and Components Thereof, Inv. No. 337-TA-197, USITC Pub. 1831 at 6 n.14 (1986).

60 day Presidential review period should be set at 8.5 percent of the entered value of the imported articles concerned and that respondents' request for an oral hearing on remedy should be denied.

DISCUSSION

I. Remedy

A. Issuance of a Limited Exclusion Order

The Commission articulated standards for the issuance of general exclusion orders in Certain Airless Paint Spray Pumps and Components Thereof, Inv. No. 337-TA-90, U.S.I.T.C. Pub. No. 1199 (1981) at pp. 17-19 (Spray Pumps). In that decision, the Commission cautioned against excessively broad exclusion orders, noting that such orders may unintentionally stifle the flow of legitimate trade. As the Commission explained in Spray Pumps, a general exclusion order is appropriate when there is proof of (1) a widespread pattern of unauthorized use of the patented invention, and (2) "certain business conditions from which one might reasonably infer that foreign manufacturers other than respondents to the investigation may attempt to enter the U.S. market with infringing articles." Id. at 18. The Commission identified factors which may be used to prove a widespread pattern of unauthorized use. These include:

1. a Commission determination of unauthorized exportation to the United States of infringing articles by numerous foreign manufacturers;

2. the pendency of foreign infringement suits based upon foreign patents which correspond to the domestic patent in issue; or

3. other evidence which demonstrates a history of unauthorized foreign use of the patented invention.

Id. at 18-19. To establish the appropriate business conditions, the Commission identified the following factors:

1. an established demand for the product in the U.S. market and conditions of the world market;

2. the availability of marketing and distribution networks in the United States for potential foreign manufacturers;

3. the cost to foreign entrepreneurs of building a facility capable of producing the articles;

4. the number of foreign manufacturers whose facilities could be retooled to produce the article; or

5. the cost to foreign manufacturers of retooling their facility to produce the articles.

Id.

The Commission has considered the arguments of complainant Minnesota Mining and Manufacturing Company (3M or complainant) for issuance of a general exclusion order in this case and finds them unpersuasive. In this investigation, there is no evidence of a widespread pattern of unauthorized sales of infringing goods by numerous foreign manufacturers. Complainant emphasizes that a number of different corporate entities have imported and sold the infringing product. Significantly, all of the companies listed by complainant have been importing the product of only one foreign manufacturer, i.e., respondent Seibu Polymer. See Complainant's Submission on Remedy, the Public Interest, and Bonding, filed June 13, 1988, at p. 3 (Complainant's Remedy Brief). Consequently, the Commission does not believe that this factor supports the issuance of a general exclusion order. Issuance of a limited exclusion order will effectively prohibit the importation of Seibu Polymer's sheeting, regardless of the corporate name of the importer and regardless of the affiliation, if any, of the importer to the manufacturer.

Nor is there any evidence of pending foreign infringement suits based upon foreign patents which correspond to the '159 patent. Complainant

attempts to diminish the significance of this missing factor by arguing that, despite the absence of foreign litigation, there probably is unauthorized use of the invention abroad. The Commission believes that such arguments are too speculative to justify the imposition of a general exclusion order. Furthermore, complainant discusses only the manufacturing activities of Seibu Polymer and its affiliated companies. As noted above, a limited exclusion order will prohibit the entry of products manufactured by all corporate affiliates of Seibu Polymer, thereby fully addressing complainant's concerns. Significantly, the parties have cited no other evidence which demonstrates a history of unauthorized foreign use of the patented invention.

With respect to the appropriate "business conditions" criterion, there is also little evidence to support issuance of a general exclusion order. Although there is an established demand for the product in the U.S. market, that demand can be fully met by complainant. ID at finding of fact (ff.) 720. In addition there are certain barriers to entry by foreign manufacturers which effectively reduce the demand for new and/or foreign products. As the IA notes and the record establishes, demand for the product is primarily from state and local governments. In connection with these purchases by state and local governments, vendors often are required to undergo a lengthy process of receiving state approval for use of a new product. See Brief of the Commission Investigative Staff on Remedy, Bonding, and the Public Interest, filed June 13, 1988, at p. 5 (IA Remedy Brief). In addition, there are "Buy American" laws and regulations in force which place constraints on purchases of foreign made goods. ID at ff. 736.

With respect to the availability of marketing and distribution networks in the United States for potential foreign manufacturers, there is very little

evidence in the record. Complainant notes that a foreign manufacturer could use domestic competitors in the U.S. market for engineering grade sheeting to distribute high intensity retroreflective sheeting. This argument is speculative and the Commission has not accorded it significant weight.

More importantly, high intensity retroreflective sheeting is not produced by a labor intensive industry (in which special equipment and manufacturing facilities are not necessary). Instead, there are start-up costs to foreign entrepreneurs of building facilities capable of producing the sheeting at issue. This characteristic of an industry has been important in prior Commission remedy determinations. Cf. Certain Nut Jewelry and Parts Thereof, Inv. No. 337 TA-229, U.S.I.T.C. Pub. 1929 (1986) (general exclusion order issued where industry was low cost and labor intensive) and Certain Steel Rod Treating Apparatus and Components Thereof, Inv. 337 TA-97, U.S.I.T.C. Pub. 1222 (1982) (limited exclusion order issued where patented apparatus was a relatively high technology device and required significant engineering and manufacturing capacity). Complainant seemingly argues that the cost to foreign entrepreneurs is insignificant by stating: "Based upon the relatively small research and development expenditures and capital expense of the Respondents from 1982 through 1987 in connection with the manufacture of the infringing product as compared with the substantial potential market in the United States, it is reasonable to conclude that the barriers for entry into the United States by another foreign manufacturer are small." Complainant's Remedy Brief at pp. 5-6. The Commission notes confidential evidence in the record which would support a contrary conclusion, i.e., that start-up costs are significant. Another undisputed fact which undercuts complainant's

argument that favorable business conditions exist for foreign manufactures is that the only two manufacturers who are presently marketing high intensity retroreflective sheeting in the United States are complainant and Seibu Polymer. See ID at ff. 675.

In addition, the number of foreign manufacturers whose facilities could be retooled to produce the infringing article appears to be small. 3/ Complainant mentions only one foreign manufacturer of the lower grade product. See Complaint's Remedy Brief at 6. See also ID at ff. 748. There is other evidence in the record suggesting that there are very few manufacturers who presently market such lower grade products in the United States and that all of those manufacturers, other than respondent Seibu Polymer, are domestic concerns. See ID at ff. 689; see also Complaint, paragraph 22 at p. 10. Consequently, the Commission determines that there is insufficient evidence in the record to conclude that a significant number of foreign manufacturers exist whose facilities could be retooled at low cost to produce high intensity sheeting.

3/ The ALJ found that complainant's equipment used to manufacture other lower grades of retroreflective sheeting could be modified to make additional, higher intensity sheeting with the investment of a relatively small amount of money. ID at ff. 721. Complainant argues that foreign manufacturers of the lower grade products could similarly retool their facilities to produce the infringing product. Complainant's Remedy Brief at 5-6. The parties do not reference any other evidence establishing that the equipment of manufacturers other than complainant could, in fact, be retooled at a low cost.

Based on the foregoing analysis, the Commission has decided to issue a limited, rather than a general, exclusion order. 4/

All of the parties agree that a visual inspection of high intensity retroreflective sheeting will not disclose whether or not a particular sample of sheeting infringes the '159 patent. As a result, the Customs Service may find it necessary to engage in testing to determine infringement. 5/

The likely need for testing of sample sheeting by the Customs Service further supports the issuance of a limited, rather than a general, exclusion order because a limited order will minimize, as much as possible, the number of different articles that the Customs Service may need to test. Articles manufactured by foreign manufacturers other than Seibu Polymer and its affiliates or assigns will not need to be tested.

4/ Respondents argue that any limited exclusion order should permit the entry of products for testing in the United States. Respondents' Submission on Remedy, Public Interest and Bonding, June 13, 1988, at pp. 15-16 (Respondents' Remedy Brief). The Commission is not persuaded by this argument. Significantly, respondents have not demonstrated any need for testing to take place in the United States. The Commission is similarly unpersuaded by respondents' argument that any exclusion order should be limited to products marketed under the tradename "Ultralite." Such a limitation would invite circumvention of the limited exclusion order. The Commission further notes that respondents' draft exclusion order does not include such a limitation.

5/ Respondents propose a test to determine when a product is not infringing. This test was not proposed until respondents' reply brief was filed. Consequently, neither the complainant nor the IA have had an opportunity to comment on this test. Without the benefit of comments by the IA or complainant, the Commission is unwilling to adopt this test. Nor does the Commission adopt complainant's suggested test for infringement, i.e., examination of articles for the presence of white gridlike patterns, because such a test likely would result in the exclusion of some products that do not, in fact, infringe the '159 patent.

B. Issuance of a Cease and Desist Order

To remedy a violation of section 337, the Commission may issue a cease and desist order directed at particular parties. 19 U.S.C. § 1337(f). In recent Commission decisions, a majority of the Commission has concluded that section 337 permits issuance of both an exclusion order and a cease and desist order, even when there is only one unfair act being remedied. See, e.g., Certain Miniature Hacksaws, Inv. No. 337-TA-237, U.S.I.T.C. Pub. 1948 (1987); Certain Compound Action Metal Cutting Snips and Components Thereof, Inv. No. 337-TA-197, U.S.I.T.C. Pub. 1831 (1986); Certain Nut Jewelry and Parts Thereof, Inv. 337-TA-229, U.S.I.T.C. Pub. 1929 (1986).

The rationale in those cases for issuing both an exclusion order and a cease and desist order was to provide complete relief to complainant. This same rationale applies in this case because respondent Seibulite International, Inc. has infringing inventories of imported sheeting in the United States, which, absent a cease and desist order, it could sell in the United States, thereby further injuring complainant. Therefore, the Commission has decided to issue a cease and desist order against Seibulite International, Inc. 6/ 7/

II. The Public Interest

Section 337 provides that the Commission shall issue a remedy unless, after considering the effect of such remedy upon (1) the public health and

---

6/ The cease and desist order does not prevent, and is not intended to prevent, Seibulite International, Inc. from selling its U.S. inventories abroad.

7/ Commissioner Eckes and Commissioner Lodwick do not join in the determination to issue a cease and desist order. See, supra, note 2.

welfare, (2) competitive conditions in the U.S. economy, (3) the U.S. production of articles that are like or directly competitive with those which are the subject of the investigation, and (4) U.S. consumers, it finds that a remedy should not be issued.

Eight nonparties have objected to the issuance of an exclusion order because the price of high intensity retroreflective sheeting in the United States may increase if an exclusion order is issued. The Commission has rejected similar arguments in the past. For example, the Commission stated in Certain Aramid Fiber, Inv. No. 337-TA-194, U.S.I.T.C. Pub. 1824 (1986) at p. 16:

> [C]ustomers' preference for a second source of a patented product does not provide generally a basis for denying relief under section 337. Although the Commission has recognized public interest exceptions to this rule, it has limited those exceptions to instances where the public as a whole suffered from the lack of availability of a patented article [footnote omitted] or complainant's product was an insufficient substitute for the imported product [footnote omitted].

The public interest exceptions discussed in Certain Aramid Fiber do not apply in this case. Evidence in the record establishes that 3M could satisfy the entire projected U.S. demand for high intensity retroreflective sheeting. ID at ff. 720. Nor do the parties or nonparties identify any evidence that the quality of respondents' product is superior to 3M's and, therefore, that the public will be adversely affected by the removal of respondents' infringing product from the U.S. market. In addition, no one has asserted that there are other public interests which would be adversely affected by an exclusion order, other than the elimination of some of the benefits of

competition. 8/ Therefore, the Commission concludes that the public interest factors do not preclude the issuance of a limited exclusion order and a cease and desist order.

III. Bond During the Presidential Review Period

Articles subject to an exclusion order issued pursuant to section 337(d) are entitled to entry under bond during the 60-day Presidential review period. In determining the amount of the bond, the Commission looks to the amount sufficient to "offset any competitive advantages resulting from the unfair method of competition or unfair act enjoyed by persons benefitting from the importation." See S. Rep. No. 1298, 93d Cong., 2d Sess. 198 (1974). Complainant and the IA have proposed different bonds during the 60-day Presidential review period. 3M argues for the imposition of a bond of 56 percent of the entered value of the infringing product based upon the difference between respondents' stated value of inventory as of December 1987 and the complainant's published list price, including maximum discounts. The IA recommends that a bond of 8.5 percent of the entered value be imposed, based upon the difference in price between the average 1987 list price for respondents' high intensity retroreflective sheeting and the average 1987 list price of complainant's sheeting.

8/ The Commission has only declined to issue a remedy for public interest reasons in three cases. See Certain Automatic Crank Pin Grinders, Inv. 337-TA-242, U.S.I.T.C. Pub. 2034 (1987); Certain Inclined Field Acceleration Tubes, Inv. 337-TA-67, U.S.I.T.C. Pub. 1119 (1980); Certain Fluidized Supporting Apparatus, Inv. 337-TA-182/188, U.S.I.T.C. Pub. 67 (1984). All three cases can be easily distinguished from this case.

The Commission adopts the IA's proposal. That proposal is more consistent with other Commission decisions than complainant's proposal. See, e.g., Certain Foam Earplugs, Inv. No. 337 TA 184, U.S.I.T.C. Pub. 1671 (1985) (bond rate determined by considering difference in prices for sale of an infringing product and the sale of the domestic product when sold in equivalent quantities). In addition, the IA's proposal will more accurately offset any competitive advantage because it is based on price lists, rather than upon an estimate of the value of respondents' inventory.

IV. Respondents' Request for Oral Hearing on Remedy

The Commission denies respondents' request for an oral hearing on remedy. Such a hearing is not necessary.

ACTING CHAIRMAN

UNITED STATES INTERNATIONAL TRADE COMMISSION

WASHINGTON, D.C. 20436

AUG 15 1988

The President
The White House
Washington, D.C. 20500

Dear Mr. President:

On July 15, 1988, the U.S. International Trade Commission determined that relief should be awarded, pursuant to sections 337(d) and (f) of the Tariff Act of 1930 (19 U.S.C. §§ 1337(d) and (f)), in Investigation No. 337-TA-268, Certain High Intensity Retroreflective Sheeting. On that date, the Commission transmitted an Order to Cease and Desist to you. The Commission has subsequently issued an erratum to that order which is attached to this letter. The erratum corrects a typographical error on page 4 of the order.

Sincerely,

Anne Brunsdale

Anne Brunsdale
Acting Chairman

Enclosure

cc: Honorable Clayton Yeutter
United States Trade Representative

UNITED STATES INTERNATIONAL TRADE COMMISSION
Washington, D.C. 20436

In the Matter of CERTAIN HIGH INTENSITY RETROREFLECTIVE SHEETING	)	Investigation No. 337-TA-268

ERRATUM TO ORDER TO CEASE AND DESIST

On page 4 of the Order to Cease and Desist issued in the captioned proceeding on July 15, 1988, there was a typographical error. Line two of section VII regarding enforcement of the order should have referenced 19 U.S.C. § 1337(f) instead of 19 C.F.R. § 1337(f). The attached sheet corrects this error and should be substituted for page 4 of the originally issued Order to Cease and Desist.

VI

(Service of Cease and Desist Order)

Respondent is ordered and directed to:

(A) Serve, within thirty (30) days after the effective date of this Order, a conformed copy of this Order upon each of its respective officers, directors, managing agents, agents and employees who have any responsibility for the importation, distribution or sale of imported high intensity retroreflective sheeting in the United States;

(B) Serve, within thirty (30) days after the succession of any of the persons referred to in section VI(A) above, a conformed copy of this Order upon each successor; and

(C) Maintain such records as will show the name, title, and address of each person upon whom the Order has been served, as described in section VI(A) and (B) above, together with the date on which service was made.

The obligations set forth in section VI(B) and (C) above shall remain in effect until the expiration of U.S. Letters Patent 4,025,159.

VII

(Enforcement)

Violation of this Order may result in any of the actions specified in 19 U.S.C. § 1337(f)), and such other action as the Commission may deem appropriate.

In determining whether Respondent is in violation of this Order, the Commission may infer facts adverse to Respondent if Respondent fails to provide adequate or timely information.

UNITED STATES INTERNATIONAL TRADE COMMISSION
Washington, D.C.

In the Matter of CERTAIN HIGH INTENSITY RETROREFLECTIVE SHEETING	)))))	Investigation No. 337-TA-268

Errata To Initial Determination of April 15, 1988

On the second to the last line of the title page of the initial determination which issued on April 15, 1988, the phrase "effect and" is added after --- sheeting with the ---. The added phrase is consistent with the initial determination at pages 123 to 135 and findings therein as well as the order at page 455.

On page 432 in Table I in the row for "Super Engineer Grade" the word "Seibu" under the VENDOR column has been added and the "x" therein moved to the "Temporary" column. The change is consistent with the referenced portions of the complaint and response.

On page 440, finding 710, lines 1 and 5, the word "Respondents'" has been substituted for the word "Complainant's". The change is consistent with the referenced exhibits and the initial determination at page 136.

On page 448, line 8 the word "testimony" has been substituted for the word "approval". The change is consistent with the use of the term "Chapman's testimony" at line 5.

For the convenience of the parties corrected title page and the corrected pages 432, 440 and 448 for each of the confidential and public versions are attached.

Paul J. Luckern
Administrative Law Judge

PUBLIC VERSION
UNITED STATES INTERNATIONAL TRADE COMMISSION
Washington, D.C.

In the Matter of CERTAIN HIGH INTENSITY RETROREFLECTIVE SHEETING	)))))	Investigation No. 337-TA-268

Initial Determination

Paul J. Luckern, Administrative Law Judge

Pursuant to the Notice to Investigation in this matter (52 Fed. Reg. No. 153 at 26577, July 15, 1987), this is the administrative law judge's initial determination, under Commission Rule 210.53 (19 C.F.R. 210.53). The adminstrative law judge hereby detemines, after a review of the record developed, that there is a violation of section 337 of the Tariff Act of 1930, as amended (19 U.S.C. §1337) (section 337), in the unauthorized importation into and sale in the United States of certain high intensity retroreflective sheeting with the effect and tendency to substantially injure an industry, efficiently and economically operated in the United States.

PUBLIC VERSION
UNITED STATES INTERNATIONAL TRADE COMMISSION
Washington, D.C.

In the Matter of CERTAIN HIGH INTENSITY RETROREFLECTIVE SHEETING	)))))	Investigation No. 337-TA-268

Initial Determination

Paul J. Luckern, Administrative Law Judge

Pursuant to the Notice to Investigation in this matter (52 Fed. Reg. No. 153 at 26577, July 15, 1987), this is the administrative law judge's initial determination, under Commission Rule 210.53 (19 C.F.R. 210.53). The adminstrative law judge hereby detemines, after a review of the record developed, that there is a violation of section 337 of the Tariff Act of 1930, as amended (19 U.S.C. §1337) (section 337), in the unauthorized importation into and sale in the United States of certain high intensity retroreflective sheeting with the tendency to substantially injure an industry, efficiently and economically operated in the United States.

APPEARANCES

FOR COMPLAINANT MINNESOTA MINING AND MANUFACTURING COMPANY

Robert T. Edell
Albert L. Underhill
Alan W. Kowalchyk
David Telleckson
MERCHANT, GOULD, SMITH, EDELL, WELTER & SCHMIDT
1600 Midwest Plaza Building
801 Nicollet Mall
Minneapolis, Minnesota 55402

FOR RESPONDENTS SEIBU POLYMER CHEMICAL CO., LTD. and SEIBULITE INTERNATIONAL, INC.

Edward M. Lebow
KELLEY, DRYE & WARREN
Suite 600
1330 Connecticut Ave., N.W.
Washington, D.C. 20036

J. Harrison Colter
John P. Spitals
Stuart Lubitz
Paul L. Gardner
Alex Chartove
SPENSLEY HORN JUBAS & LUBITZ
1880 Century Park East
Fifth Floor
Los Angeles, CA 90067

FOR STAFF

Marcia H. Sundeen, Esq.

April 15, 1988

TABLE OF CONTENTS

	PAGE
PROCEDURAL HISTORY	1
JURISDICTION	4
OPINION ON VIOLATION	4
I. The Unfair Act and the Claims In Issue	4
A. Validity and Enforceability of the '159 Patent	7
1. Meaning of the Claimed Language "Increased Adhesion"	8
(a) Claim Language	10
(b) The '159 Specification	11
(c) The '159 File Wrapper	22
(d) "Increased Adhesion" Means "Greater Resistance To Pulling Apart Cover Film and Binder Material"	29
2. 35 U.S.C. §102(b)	37
3. 35 U.S.C. §103	46
(a) Scope and Content of the Prior Art	49
(b) Differences Between the Prior Art and the Claim In Issue	52
(c) Level of Ordinary Skill in the Art	53
(d) The Claimed Invention Is Not Obvious To A Man Skilled In The Art	55
(e) Objective Evidence of Nonobviousness (Secondary Factors)	62
(f) The Claims In Issue Are Not Invalid	63
4. 35 U.S.C. §112	64
(a) Independent Claim 1 Is Not A Means-Plus-Function Claim	64

(b) Section 112, Second Paragraph 69

(c) Section 112, First Paragraph 73

(i) Respondents' Tests As To Whether ..... Curing In Situ Does or Does Not Account. For Increased Bond Strength 80

(ii) Razor Blade Test 88

(iii) Independent Claim 1 is not Invalid Because of Functional Language to the Exact Point of Novelty 91

5. Enforceability of the '159 Patent 92

B. Infringement 95

1. Claim Interpretation 97

2. Application of the Claims To The Accused Sheeting . 99

II. Importation and Sale 118

III. Domestic Industry 119

IV. Efficient and Economic Operation 122

V. Substantial Injury 123

VI. Future Injury 135

FINDINGS OF FACT 139

I. Jurisdiction 139

II. Parties and Products in Issue 139

III. The '159 Patent 141

IV. Prosecution of the '159 Patent 157

V. Invention McGrath 165

VI. Prior Art 184

VII. DeVries, Sharp and Smook 258

VIII. Respondents' Tests 303

IX. Infringment 334

X. Importation and Sale 412

XI. Domestic Industry 414

XII. Efficient and Economic Operation 419

XIII. Substantial Injury 426

Market Share 426

Lost Sales 428

Price Matching 430

Market Competition 431

XIV. Future Injury 440

Production and Export Capacity 440

Domestic Inventory 443

Marketing and Approval 445

Underselling 448

Engineer Grade Price Depression 452

CONCLUSIONS OF LAW 454

INITIAL DETERMINATION AND ORDER 455

ABBREVIATIONS

C Pre	- Complainant's Prehearing Brief
CPF	- Complainant's Proposed Findings of Fact
C Post	- Complainant's Post Hearing Brief
C Post R	- Complainant's Post Hearing Rebuttal Brief
CPX	- Complainant's Physical Exhibit
CX	- Complainant's Exhibit
FF	- Findings of Fact
RPF	- Respondents' Proposed Findings of Fact
R Pre	- Respondents' Prehearing Brief
R Post	- Respondents' Post Hearing Brief
R Post R	- Respondents' Post Hearing Rebuttal Brief
RPX	- Respondents Physical Exhibit
RX	- Respondents' Exhibit
SPF	- Staff's Proposed Finding
S Post	- Staff's Post Heaing Brief
S Post R	- Staff's Post Hearing Reply Brief
SX	- Staff's Exhibit
Tr.	- Transcript of Hearing & Closing Arguments

PROCEDURAL HISTORY

On June 2, 1987, complainant Minnesota Mining and Manufacturing Company (3M) filed a complaint with the Commission under section 337 which complaint was amended on June 15, 17, 18 and 22, 1987. The complaint, as amended, alleged unfair methods of competition and unfair acts in the importation into the United States of certain high intensity retroreflective sheeting, and in its sale, by reason of alleged infringement of U.S. Letters Patent 4,025,159 (the '159 patent). The complaint further alleged that the effect or tendency of the unfair methods of competition and unfair acts is to destroy or substantially injure an industry, efficiently and economically operated, in the United States. Complainant requested that the Commission institute an investigation and, after a full investigation, issue a permanent exclusion order and permanent cease and desist orders.

On July 6, 1987, the Commission issued a notice of investigation (the notice) in which the scope of the investigation was defined as:

> ... [W]hether there is a violation of subsection (a) of section 337 in the unlawful importation into the United States of certain high intensity retroreflective sheeting, or in their sale, by reason of alleged infringement of claims 1, 3-5 and 7 of U.S. Letters Patent 4,025,159, the effect or tendency of which is to destroy or substantially injure an industry, efficiently and economically operated, in the United States.

The notice was published in the Federal Register on July 15, 1987 (52 Fed. Reg. No. 153, 26577).

The notice named the following respondents:

Seibu Polymer Chemical Co., Ltd.
No. 5-26, Kami-Ikeburkro

2-Chome, Toshima-ku
Tokyo-170, Japan

Seibulite International, Inc.
3136 East Victoria Street
Rancho Dominguez, California 90221

The respondents, as identified in respondents' response to the staff's Interrogatory No. 1, are:

Seibulite International Inc.
2-5-26 Kami-Ikobukuro, Toshima-Ku, Japan
Telephone No.: (03) 940-9146
Incorporated in Japan.
Principal place of business: Tokyo, Japan.

Seibulite International Inc.
3136 E. Victoria St., Rancho Dominguez, CA 90221
Telephone No.: (213) 632-7500
Branch office of Seibulite International Inc.

Seibu Polymer Chemical Co., Ltd.
2-5-26 Kami-Ikebukuro, Toshima-Ku, Tokyo, Japan
Telephone No.: (03) 940-9111
Incorporated in Japan.
Principal place of business: Tokyo, Japan.

Seibu Polymer Chemical Industry Co., Ltd.
2-5-26 Kami-Ikebukuro, Toshima-Ku, Tokyo, Japan
Incorporated in Japan.
Principal place of business: Toyko, Japan.

(FF 7). The respondents are collectively referred to as "respondents" or "Seibu".

On July 30, 1987 respondents filed a response to the complaint and notice of investigation denying the alleged unfair acts and setting forth certain affirmative defenses.

A prehearing conference and hearing commenced on February 1, 1988. The hearing continued on February 2, 3, 4, 5, 6, 8, 9 and 10. Deposition testimony admitted into evidence was agreed by the parties to be in evidence not only on credibility issues but for substance. Order No. 14, which issued

February 8, sustained complainant's objections to RX-9, RX-10, RX-11, RX-12, RPX-28, paragraphs 20 to 30 of Kobayashi Witness Statement RX-35, and paragraph 5 of Ebihara Witness Statement RX-36. On February 3, 1988 respondents' Motion No. 268-10 to exclude complainant's physical exhibits CPX-70 to -75 and any testimony thereon was denied. Order No. 15, which issued on February 10, relates to the denial of Motion No. 268-10. During the course of the hearing complainant orally moved to strike certain evidence of respondents. The motion was argued at the hearing and written submissions on the motion has been received. Order No. 16 which issued on April 15, 1988 relates to that oral motion.

Prehearing and Posthearing submissions were submitted by complainant, respondents and the staff.

The matter is now ready for an initial determination.

This initial determination is based on the entire record including the evidentiary record compiled at the hearing and the exhibits admitted into evidence. The administrative law judge has also taken into account his observation of the witnesses that appeared at the hearing. Proposed findings submitted by the parties, but not herein adopted, either in the form submitted or in substance, are rejected either as not supported by the evidence or as involving immaterial matters. The findings of fact include references intended to serve as guides to the testimony and exhibits supporting the findings of fact. The references do not necessarily represent complete summaries of the evidence supporting each finding.

JURISDICTION

The Commission has in rem and subject matter jurisdiction. (FF 1). It also has in personam jurisdiction over all the respondents. (FF 2, 3, 4).

OPINION ON VIOLATION

This patent-based investigation under section 337 concerns the alleged importation from Japan into the United States of certain retroreflective sheeting known as "Ultralite" encapsulated lens sheeting (FF 8).

The investigation's scope is set forth in the procedural history.

I. The Unfair Act and the Claims In Issue

It is complainant's position that respondents are committing unfair acts, in that respondents' "Ultralite" encapsulated lens retroreflective sheeting being imported into and sold in the United States infringes claims 1, 3, 4, 5 and 7 of the '159 patent.

Retroreflective sheeting, also often referred to simply as reflective sheeting, returns an incident beam of light back toward the source even though the incident light strikes the sheeting at an angle other than perpendicular to the sheeting. Such sheeting differs from a mirror-type reflector which reflects light at an angle equal but opposite to the incident light. Light from headlamps of a vehicle which illuminates a traffic sign covered with retroreflective sheeting is returned brightly back toward the vehicle due to a layer of small diameter glass beads in the retroreflective sheeting. The glass beads function as minute lenses, which focus incident light beams onto a light-reflective surface, such as a vapor-coated aluminum, which is behind the beads. The glass beads are supported in a polymeric material and the exact

relationship between the beads and the light-reflective surface in back of the beads varies depending on the type of retroreflective sheeting (FF 9).

Exposed lens type retroreflective sheeting, developed in the late 1930's and early 1940's, utilized glass beads partially embedded in a polymeric binder material and partially exposed above the binder material. A disadvantage associated with the exposed lens sheeting was that it lost reflectivity when the partially exposed portions of the glass beads were covered with water (FF 100).

The problem associated with exposed lens sheeting was solved by the development of enclosed lens retroreflective sheeting. In this construction the glass beads are covered, rather than exposed, so that when water covers the sheeting, the glass beads remain effective to focus light on the underlying light-reflective aluminum layer. The prior art U.S. patents to Schwab 3,795,435 (the '435 patent), which issued on March 5, 1974 on an application filed on October 8, 1970, and Palmquist 2,407,680 (the '680 patent) which issued on March 6, 1951 on application filed on December 5, 1947 (FF 156), show enclosed lens sheeting constructions. There is testimony that enclosed lens sheeting is sheeting in which spherical glass elements are completely enclosed in a resinous binder (FF 177). A problem associated with enclosed lens sheeting is that the brilliancy of intensity of reflection is reduced by the transparent material which covers the microspheres and absorbs or dissipates a portion of the incident light (FF 101, 154, 159). Enclosed lens reflective sheeting is also known in the trade as engineer grade sheeting (FF 29).

Retroreflective sheet of the "encapsulated (cellular) lens type" means sheeting that has the glass bead retroreflective elements encapsulated within

hermetically sealed cells (FF 10, 47, 179). More specifically, in encapsulated lens retroreflective sheeting the glass beads are supported and partially embedded in a base layer of binder material, a transparent cover sheet is disposed above the glass beads, and the cover sheet is adhered to th layer of a polymeric binder material by a network of narrow intersecting bond that extend between the binder material and cover sheet. There is no network of narrow intersecting bonds in enclosed lens sheeting (FF 157). Encapsulate lens sheeting was invented by an employee of complainant, viz. Eugene McKenzi who is now retired (FF 12, 115, 208). McKenzie U.S. Pat. No. 3,190,178 (the '178 patent) which issued on June 22, 1965 on an application filed on June 29 1961 describes that invention (FF 47). The '178 patent is assigned to complainant (FF 102).[1/]

The '159 patent in issue, titled "Cellular Retroreflective Sheeting" and assigned to complainant, was granted by the U.S. Patent and Trademark Office on May 24, 1977 to Joseph M. McGrath. It is based on application Ser. No. 658,284 filed February 17, 1976 (FF 10).[2/] Independent claim 1 and dependent claims 3, 4, 5, and 7, the only claims in issue, read:

> 1. Retroreflective sheeting comprising (1) a base sheet having a layer of retroreflective elements disposed over one of its surfaces; (2) a cover sheet disposed in spaced relation from the layer of retroreflective elements; and

---

1/ The '159 patent describes the McKenzie '178 sheeting as a "film-covered exposed lens retroreflective sheeting" and defines the "exposed lens" construction as "with the microspheres having an air interface" (FF 12). The McKenzie '178 "exposed lens" construction is distinct from the exposed lens type retroreflective sheeting developed in the late 1930's and early 1940's (FF 100).

2/ There is evidence that the first reduction to practice of the claimed invention occurred in September-October 1973 (FF 49, 60 to 67, 77).

(3) a network of narrow intersecting bonds extending between said cover sheet and base sheet and comprising binder material thermoformed at the point of contact between said bonds and ... said cover sheet ... so as to adhere the two sheets together and form a plurality of cells within which retroreflective elements are hermetically sealed; characterized in that the binder material is selected from materials that show increased adhesion [3/] to said ... cover sheet ... when a solid layer of the material that has been previously laminated to said sheet is cured, and further characterized in that the binder material is cured in situ after being thermoformed, whereby the bonds have increased bond strength to the cover sheet and base sheet. [4/]

3. Sheeting of claim 1 in which said cured binder material comprises an acrylic-based ingredient.

4. Sheeting of claim 3 in which the cover sheet also comprises an acrylic-based ingredient.

5. Sheeting of claim 4 in which the acrylic-based ingredient is polymethylmethacrylate.

7. Sheeting of claim 1 in which said retroreflective elements comprise transparent microspheres.

(FF 11).

A. Validity and Enforceability of the '159 Patent

Respondents argue that the claims in issue are not valid under 35 U.S.C. §§ 102(b) and 103 and each of the first and second paragraphs of 35 U.S.C. § 112. It is also argued that the '159 patent is unenforecable because of inequitable conduct. Both complainant and the staff argue to the contrary, although the staff's position as to validity under 35 U.S.C. §112 is conditioned on a certain interpretation of the claims. Moreover respondents

---

3/ As seen in the next section there is a dispute as to the meaning of the claimed phrase "increased adhesion"

4/ The deleted language in claim 1 relates to an embodiment not in issue (Tr. at 425, 426, 426).

have also argued that the claims in issue can avoid invalidity under §112 (R Post at 26).

Under 35 U.S.C. § 282 a United States patent is presumed to be valid. An alleged infringer, asserting that a patent is unenforceable because of inequitable conduct and is invalid, has the burden of establishing unenforceability and invalidity by clear and convincing evidence. Jones v. Hardy, 727 F.2d 1524, 1528, 220 U.S.P.Q. 1021, 1024 (Fed. Cir. 1984); American Hoist & Derrick Co. v. Sowa and Sons, Inc., 725 F.2d 1350, 1358, 220 U.S.P.Q. 763, 769 (Fed. Cir. 1984); J.P. Stevens & Co., Inc. v. Lex Tex, Ltd, Inc., 747 F.2d 1553, 1559, 223 U.S.P.Q. 1089, 1092 (Fed. Cir. 1984); W.L. Gore & Associates Inc. v. Garlock Inc. 721 F.2d 1540, 1556, 1557, 220 U.S.P.Q. 303, 315, 316 (Fed. Cir. 1983) cert denied 105 S. Ct. 709 (1984). In addition, claims are to be construed in order to uphold their validity. ACS Hospital Systems, Inc. v Montifiore Hospital, 732 F.2d 1572, 1577, 221 U.S.P.Q. 929, 932 (Fed. Cir. 1984).

1. Meaning of the Claimed Language "Increased Adhesion"

Respondents' argument with respect to invalidity is premised on alternative grounds. Thus it is argued that if the claimed language "increased adhesion" is given complainant's broad interpretation, viz. "greater resistance to pulling apart of the cover film and base sheet material" the claimed subject matter must be found in, or is an obvious transition from, the retroreflective sheeting disclosed in the McKenzie '178 patent (R Post R at 21, 22). Alternatively it is argued that if "increased adhesion" is "correctly interpreted" as "increased interface adhesion", the '159 patent is invalid under §103 in view of the McKenzie '178 patent and other prior art (R Post R at 22).

Respondents argue that while the inventor's "intentions" are not known, what complainant told the Patent Office in order to obtain allowance of the claims in issue is known; that complainant obtained allowance of those claims based upon its arguments that the claimed invention provides "increased interface adhesion"; and that while it is now known that interface adhesion cannot be measured, there is nothing to suggest that the Examiner knew that "interface adhesion" could not be measured. It is argued that complainant's definition of "adhesion", as meaning nothing more specific than bond strength, is inconsistent with the fact that original claim 1 in the '159 application was rejected notwithstanding the fact that it recited "increased bond strength" and was allowed only after the "increased adhesion" clause was added (R Post R at 12).

Complainant argues that the "increased adhesion" recited in independent claim 1 is not limited to "interface adhesion" or to any other mechanism (C Pre at 17, 21, 22, C Post at 33). It is argued that it strains credibility to suggest that inventor McGrath intended that terms in the '159 patent would have a meaning that would make it impossible to determine whether anyone practiced the claimed invention (C Post at 32); and that in giving consideration to the entire teaching of the '159 patent, it is clear that inventor McGrath was not discussing an increase in adhesion from the highly technical "interface adhesion" standpoint but rather to improving the bond strength between the cover sheet and the base sheet of encapsulated lens retroreflective sheeting regardless of what causes the increase (C Post at 34).

The staff argues that the record as a whole supports a contention that the disputed claim language claimed "increased adhesion" must result from curing (S Post R at 3, 4).

To ascertain the true meaning of disputed claim language, while recognizing that the patent law "allows the inventor to be his own lexicographer", W.L. Gore & Associates, Inc. v. Garlock, Inc., 721 F.2d at 1558, 220 U.S.P.Q. at 316; Fromson v. Advance Offset Plate, Inc., 720 F.2d 1565, 1569, 219 U.S.P.Q. 1137, 1140 (Fed. Cir. 1983); Autogiro Co. of America v United States, 384 F.2d 391, 397, 155 U.S.P.Q. 697, 702 (Ct. Cl. 1967), resort should be made to the language of the claims, the patent's specification, and the prosecution history of the patent. See, McGill, Inc. v John Zink Co., 736 F.2d 666, 673-675, 221 U.S.P.Q. 944, 948-951 (Fed. Cir.), cert. denied, 469 U.S. 1039 (1984); Fromson v Advance Offset Plate, Inc., 720 F.2d at 1571, 219 U.S.P.Q. at 1142. The limitations of a separate dependent claim may not be imported into a separate independent claim and the presence of an express limiation in one claim negates an intent to similarly limit by implication a separate claim in which that limitation is not expressed. Kalman v. Kimberly-Clark Corp., 713 F.2d 760, 218 U.S.P.Q. 781 (Fed. Cir. 1983).

(a) Claim Language

The language of the combination claims in issue requires that base sheet binder material of an encapsulated lens retroreflective sheeting be selected from materials that show "increased adhesion" to a cover sheet when a solid layer of the binder material that has been previously laminated to a cover sheet is cured. The claims at issue do not require a particular method by which the solid layer of binder is cured. Those claims do require that the base sheet binder be initially thermoformed into a network of intersecting bonds in sealing contact with the cover sheet and thereafter be cured in

situ. Because the binder material is cured in situ, the resulting network of intersecting bonds in sealing contact with the cover sheet, as recited in the claims, is said to have "increased bond strength to the cover sheet and base sheet". The claims at issue do not require a particular method by which the binder thermoformed material is cured in situ. Also the term "cured" is not defined in the claims (FF 11). Dependent claim 2, which is not at issue, extends to curing induced by electron beam. Additionally, dependent claims 6 and 15, also not at issue, extend to sheeting with a cover sheet including ingredients that coreact with said binder material or bonds during curing (FF 11).

(b) The '159 Specification

Under the subheading "Summary of the Invention", it is disclosed that the retroreflective sheeting of the invention incorporates a network of bonds, which are initially thermoformed into sealing contact between the cover film and base sheet, preferably by the procedure described in the McKenzie '178 patent, viz. by displacing binder material from the base sheet into contact with the cover film, but which network of bonds "are subsequently cured in situ after the thermoforming operation" (FF 13). With reference to the term "cured in situ", "curing" is defined in the '159 patent:

> to describe chemical reactions of constituent ingredients, such as cross-linking or chain-extension reactions, which result in relative insolubility and infusibility of the cured material.

(FF 14). Prior to displacement by the thermoforming step the binder material is generally said to be a room-temperature-solid that may be controllably thermoformed to form a hermetic seal such that in areas subjected to heat and

pressure, the binder material flows into contact with the surface of the cover film against which it is pressed. After removal of heat and pressure, the binder material returns to a self-sustaining form (FF 14). It is said that generally the "cured in situ" of the '159 invention is initiated by subjecting the sheeting to "radiation--such as electron beam, ultraviolet, nuclear, or microwave--which typically activates one or more ingredients in the binder material, whereupon chemical reaction follows" (FF 14). Heat radiation may also be used (FF 17, 30).

Greatly improved results are said to be achieved when the bonds are "cured in situ" after the thermoforming operation. Thus sheeting of the '159 patent being able to be laminated to a substrate such as a sign board with much greater latitude in heat and pressure than with the then existing commercial products, makes the lamination operation more convenient and rapid and minimizes wastage. In outdoor weathering tests at test sites, sheeting of the '159 patent demonstrated a higher resistance to degradation than existing film-covered lens products (FF 14).[5/]

Under the subheading "Background of the Invention," it is disclosed that the '159 invention is "first of all" an advance in the art of retroreflective sheeting (with the microspheres having an air interface) that is taught in the McKenzie '178 patent. The '178 sheeting is disclosed in the '178 patent as comprising (1) a base sheet in which a dense monolayer of transparent microspheres is partially embedded and partially exposed, with a specular

---

5/ In evidence is an example of a McKenzie type sheeting which was installed in the field about 1979 and removed in 1985. The peeling away of the cover film from the base sheet is readily apparent (FF 210, 240). A stop sign using the '159 type high intensity retroreflective sheeting after almost seven-and-one half years of field exposure showed no evidence of delamination (FF 220, 240).

reflective metal layer underlying the embedded surfaces of the microspheres, (2) a transparent cover film disposed in spaced relation above the layer of microspheres, and (3) a network of narrow, intersecting polymer-based bonds that extend over the surface of the base sheet to adhere the base sheet and cover film together and to divide the space between the base sheet and cover film into hermetically sealed cells or pockets in which the microspheres have an air interface (FF 12).

Referring to the following FIG. 2 of the '178 patent:

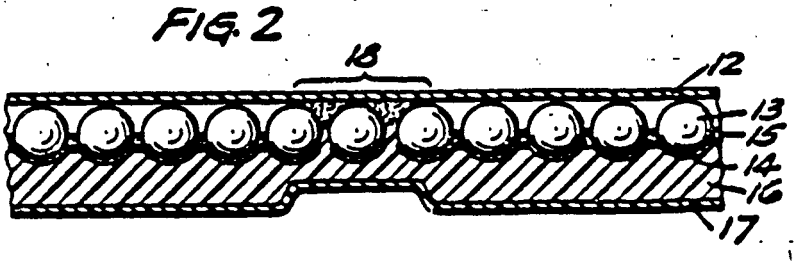

the base sheet of the '178 patent can be represented as items 15 and 16, the transparent microsphere as item 13, the reflective metal layer as item 14 and the transparent cover film as item 12. The network of narrow, intersecting polymer-based binder was a critical part of the sheeting construction of the '178 patent. Thus referring to FIG. 2, McKenzie disclosed:

> In addition, a critical part of the structure of the sheeting lies in the narrow line area of the hermetic seal 18, where the binder material from layer 15 for the beads in other portions of the sheet structure, and any intermingled material from layer 16, is actually forced

> into intimate hermetically-sealed contact with the transparent cover film 12. The small glass beads in the pattern of hermetic seal throughout the sheeting are characteristically flooded over and masked by binder material in which the glass beads of other areas of the sheeting are partially embedded. (FF 112).

Under the subheading "Background of the Invention", the '159 specification states that a special challenge, posed by the cellular retroreflective sheeting as taught in the '178 patent, is to obtain "lasting bonds" between the cover film and base sheet such that the retroreflection is not very greatly reduced by disruption of the bonds, as in the then existing commercial sheeting, between the cover film and base sheet (FF 12). It is disclosed that the utility of cellular retroreflective sheeting would be greatly expanded if some way were found to provide bonds of greater durability (FF 12).

As for the reason why inventor McGrath obtains an improved sheeting in the cured in situ step, when compared with the '178 sheeting, McGrath states under the subheading "Summary of the Invention":

> The reasons for the improvement in results are not fully understood. It is recognized that a cured or cross-linked material may exhibit improved internal strength properties. But the present bonds do more than that, since they have improved adhesion to the cover film. In <u>some embodiments</u> of the invention, for example, the cover film can be pulled away from the bonds intact before the bonds are cured, and in some cases be visibly free of bond material, while it cannot be pulled away in that manner after curing.
>
> <u>While not limiting ourselves to a particular mechanism</u>, it is theorized that when the bonds are first formed under heat and pressure, some of the bond material migrates into the cover film .... Upon the later curing of the bond the migrated material may become more firmly interlocked or intertwined with the molecular structure of the cover film to achieve greater resistance to a pulling apart of the cover film and base sheet material.

> In addition, under certain curing conditions such as curing induced by electron-beam or ultraviolet radiation, and in certain embodiments of sheeting, a minor amount of chemical reaction may occur between the cover film ... and the bond; for example, the radiation may cause loss of hydrogen atoms from the material of the cover film ... whereupon that material reacts with a reactive site, such as unsaturation, in the material of the bond. But whatever the explanation, the improved adherence between the cover sheet and base sheet provides a significant advance in cellular retroreflective sheeting. [(FF 14)] [Emphasis added]

Under the subheading "Detailed Description", as representative of retroreflective sheeting, the '159 specification again makes reference to the McKenzie '178 patent. Thus it discloses that a base sheet material "can be prepared by procedures well known in the art, such as described for example in McKenzie U.S. Pat. No. 3,190,178" and that the assembly of cover film and base sheet "may then be pressed, as also described in the McKenzie patent" (FF 17). Following this thermoforming operation which is also referred to as an embossing operation, the cover film continues to be in a spaced relation with the microspheres providing the necessary air interface to obtain the desired optical effects and "the desired hermetic cells covered by a cover film, and surrounded on all borders by a polymer-based bond" (FF 17).

To complete formation of the retroreflective sheeting, the '159 specification under the subheading "Detailed Description" teaches that the embossed (thermoformed) sheeting is exposed to a predetermined level of radiation, which causes the binder material "to cure to a relatively infusible and insoluble condition" as required by inventor McGrath's definition of "curing" (FF 17).

Binder materials that will undergo curing under radiation are said to be well known in the art. Binder materials useful in the invention of the '159 patent are those described as "typically room-temperature-solids that will

soften to a flowable state when heated to temperatures between about 25° and 150° C" which under pressure of an embossing platen will flow sufficiently to wet the cover film and to flood the microspheres in the areas pressed, but not into areas that are not pressed (thus leaving cells or pockets of exposed microspheres). Once the heat and pressure are removed, the binder materials will hold their thermoformed shape. The described binder material is said to include one or more ingredients that are activated in the presence of radiation, as by formation of free radicals through loss or transfer of hydrogen atoms or decomposition of initiator molecules with the activating molecules reacting with an active site, such as a double bond, on another molecule, to start a polymer chain or to initiate crosslinking. In some cases, the binder material is said to comprise a polymeric matrix material and a monomer, which monomer is said to be the ingredient principally activated by the radiation. It is said that the polymeric matrix material may or may not participate in the reaction, for example, through the presence of preradiation reactive groups or because of activation of the polymer molecule as by loss of hydrogen atoms and that the binder material may consist only of polymeric material having groups that are activated by radiation and also, perhaps, containing preradiation reactive groups. Acrylic-based ingredients, meaning acrylic or methacrylic acid or ingredients obtained from acrylic or methacrylic acid, are said to be especially useful binder materials and

> [t]ypical useful acrylic-based monomers are polyethylene glycol diacrylates; 1-6-hexanediol diacrylate; hydroxymethyl diacetone acrylamide; and 2-cyanoethyl acrylate; and typical acrylic-based polymeric materials are acrylate or methylacrylate polymers or copolymers. Other useful binder materials are represented by diallyl glycol carbonate; and saturated or unsaturated polyester or polyurethane resins.

(FF 19).

The '159 specification teaches that compositions that cure in the presence of ultraviolet radiation typically include a sensitizer such as a benzoin ether or a benzophenone derivative in addition to a reactive monomer and a polymeric binder material. Catalysts for initiating curing in the presence of either thermal or microwave radiation are said to include peroxides such as benzoyl peroxide and azo compounds such as azobisisobutyronitrile. An especially useful transparent cover film is said to comprise polymethylmethacrylate, which maintains its clarity and other properties very well under outdoor weathering conditions. Polycarbonate films are also said to be useful as a cover film and especially where outdoor durability is not important, films such as polyethylene terephthalate, cellulose acetate, and cellulose acetate butyrate may be used (FF 19).

The '159 specification, as well as the original application as filed on Feb. 17, 1976, disclose that "one surprising aspect" of the claimed invention is that some binder materials do not provide improved bonds to all types of materials. Thus the acrylic binder materials, as used in the examples of the '159 patent, are said not to form a bond to the polyethylene terephthalate carrier sheet on which they are carried. It is taught that "[u]seful films and binder materials can be selected by the razor blade test reported in Example 1" (FF 19). The last paragraph of Example 1, that refers to the razor blade test, reads:

> To illustrate the improved bond obtained by use of the cured binder material, the following comparison may be made: A 0.6 millimeter-thick film was prepared by knife-coating the radiation-curable composition described above onto a silicone-treated release paper and then oven-drying the coating. Two sections were cut from this film, removed from the liner, and each laminated under 250

pounds per square inch (111.7 x 10 newton per square meter) at 220°F (105° C) to a cast polymethylmethacrylate sheet using a smooth-surfaced platen press. One of the samples was then irradiated with a 190-kilovolt electron beam to a dose of 1.5 megarads, after which the adhesion between each sample of the film and the polymethylmethacrylate was checked by attempting to separate them with a single-edged razor blade. The uncured film could be easily removed, but the irradiated film was very tightly bound and could not be cleanly separated from the polymethylmethacrylate sheet [(FF 20)].

The '159 patent contains fourteen examples. Its Example 1 prepares a radiation-curable composition by mixing the following:

	Parts by Weight
Copolymer including 45 percent ethyl acrylate and 55 percent methyl methacrylate dissolved in xylene to give a 37.6 percent solids solution,	164.9
polyethylene glycol (200) diacrylate	19.0
rutile titanium dioxide pigment and	18.5
stearic acid	0.5

This composition is knife-coated over the vapor-coated glass microspheres in a polyethylene-coated web, after which most of the solvent from the composition is removed by heating the web in an oven. There results a support layer about 60 micrometers thick. A polyethylene terephthalate film having a pressure-sensitive adhesive layer on one surface is then laminated to the radiation-curable support layer by passing the web and film through a set of pressure rollers, with the adhesive side against the support layer. The polyethylene-covered paper is then stripped away, leaving a base sheet material. This base sheet material and a biaxially oriented polymethyl methacrylate film in a thermoforming operation are then inserted together between two platens, one of which platen is ridged, and heated to 150° C. This operation is said to laminate the cover film to the base sheet by a

network of bonds. The resulting sheeting is then cured in situ by irradiation with a 190-kilovolt electron beam to give a dosage of 1.5 megarads (FF 20).

The radiation-curable binder composition of Example 2 of the '159 patent was prepared from a terpolymer consisting of 52.5 percent methyl methacrylate, 43 percent ethyl acrylate, and 4.5 percent isooctyl acrylate dissolved in xylene at 33.3 percent solids, polyethylene glycol (200) diacrylate, rutile titanium dioxide pigment and stearic acid (FF 21). After the curing in situ of the composition with an electron beam, square samples of both the cured sheeting and uncured sheeting were mounted on aluminum panels for heat-shrink testing. It is said that:

> After 30 minutes at 200° F, the cover film of the uncured sheeting had shrunk, but the irradiated sheeting showed no shrinkage. After 20 hours at 200°F (93° C), the cover film of the uncured sheeting had shrunk severely and was almost completely delaminated from the base sheeting. The irradiated sheeting showed only slight shrinkage and delamination after 20 hours at 200°F (93° C). [(FF 21)].

The following radiation curable compositions were used in Examples 1 thru 10 of the '159 patent (FF 23 to 29):

<u>Example 3</u>

Copolymer including 45 percent ethyl acrylate and 55 percent methyl methacrylate dissolved in 2-ethoxyethyl acetate to give a 29.9-percent-solids solution, 1.6-hexanediol diacrylate, rutile titanium dioxide pigment and stearic acid

<u>Example 4</u>

Terpolymer including 52.5 percent methacrylate, 43 percent ethyl acrylate, and 4.5 percent isooctyl acrylate dissolved in xylene at 43.9 percent solids, polyethylene glycol (200) diacrylate, stearic acid and benzoin ethyl ether

<u>Example 5</u>

Linear saturated polyester resin (Vitel PE 222 supplied by Goodyear Chemicals),diallyl glycol carbonate ("CR-39" supplied by PPG Industries) methyl ethyl ketone and xylene

<u>Example 6</u>

Copolymer including 70 percent methyl methacrylate and 30 percent octyl acrylate, polyethylene glycol (200) diacrylate and 2-hydroxyethyl acrylate

Example 7

Terpolymer consisting of 52.5 percent methylmethacylate, 43 percent ethyl acrylate and 4.5 percent isooctyl acrylate dissolved in xylene to give a 43.9 percent solids solution, polyethylene glycol (200) diacrylate, rutile titanium dioxide pigment, stearic acid and xylene

Example 8

Copolymer consisting of 45 percent ethyl acrylate and 55 percent methyl methacrylate dissolved in 2-ethoxyethyl acetate/2-propanol to give a 32.4 percent solids solution, and hydroxymethyl diacetone acrylamide

Example 9

Copolymer consisting of 45 percent ethyl acrylate and 55 percent methyl methacrylate dissolved in 2-ethoxy-ethyl acetate/2-propanol to give a 32.4 percent solids solution and 2 cyanoethyl acrylate

Example 10

Copolymer consisting of 45 percent ethyl acrylate and 55 percent methylmethacrylate dissolved in 2-ethoxyethyl acetate to give a 29.9 percent solids solution, polyethylene glycol (200) diacrylate, rutile titanium dioxide pigment and stearic acid

Each of Examples 3, 4, 5, 6 and 7 reported after irradiation "a firmly bonded cover film" (FF 22, 23, 24, 25, 26).

Example 11 of the '159 patent reads:

> Retroreflective sheeting was prepared from the following ingredients using the procedures given in Example 1:
>
> | | Parts by Weight |
> |---|---|
> | Terpolymer consisting 52.5 percent methylmethacylate, 43 percent ethyl acrylate and 4.5 percent isooctyl acrylate dissolved in xylene to give a 43.9 percent solids solution | 136.7 |
> | Polyethylene glycol (200) diacrylate | 20 |
> | 2,2'-Azobis(2-methylpropionitrile) | 4 |
> | Acetone | 20 |
>
> Biaxially oriented, 75-micrometer-thick polymethylmethacrylate film and 75-micrometer-thick polycarbonate film (Lexan supplied by General Electric) were used as cover films. The embossed sheeting was thermally cured by heating for 16 hours at 65° C. Either uncured sheeting construction required about 7×10^5 dynes per centimeter width (4 pounds per inch width) to pull the cover film away from the base sheet. After the curing operation, a force of 21×10^5 dynes per centimeter width (12 pounds per inch width) was not sufficient to separate either cover film from the base sheet [(FF 30)]. [Emphasis added]

Example 11 illustrates the claimed "increased bond strength to the cover sheet and base sheet" caused by McGrath's "cured in situ" operation (FF 30). The "pull" test in Example 11 has been referred to by the parties as a "peel strength" test (Tr. at 2044).[6/]

The following radiation curable compositions were used in Examples 12, 13 and 14 of the '159 patent (FF 31, 32, 33):

Example 12	Example 13 and 14
Terpolymer consisting of 52.2% methyl methacrylate 43% ethyl acrylate and 4.5% isooctyl acrylate dissolved in xylene to give a 43.9% solids solution, polyethylene glycol (200) diacrylate, rutile titanium dioxide pigment, stearic acid and xylene	Terpolymer consisting of 52.2% methyl methacrylate 43% ethyl acrylate and 4.5% isooctyl acrylate dissolved in xylene to give a 43.9% solids solution, polyethylene glycol (200) diacrylate, rutile titanium dioxide pigment, stearic acid and xylene

In Example 12 after a variety of different radiation conditions was completed, the polyethylene terephthalate film was removed from the sheetings, and a pressure-sensitive adhesive laminated to the exposed surfaces. Thereupon, 7.6-cm/sq. test samples were adhered to an aluminum sheet by the layer of adhesive. A control sample of sheeting prepared without any radiation and a sample of commercial sheeting, made according to the '178 patent were also made. The samples were then heated to 93°C (200°F) for 3

6/ In a peel strength test a force is applied to peel the cover film away from the layer of binder material, specificially from the network of bonds (FF 50). A man skilled in the art would know how to run a peel test (Tr. at 2044). Peel tests of a variety of sorts are very commonly used to test adhesives (FF 98) and at the time the '159 patent application was filed on February 17, 1976, there were a number of well known peel test specifications (FF 333). In running peel tests on the '159 material it is important that the comparision before curing and after curing be subjected to the same test routine (FF 99).

hours, which subjected the samples to shrinking forces that tested the strength by which the bonds held the cover film in place. After heating, the portion of the area of each sample that exhibited no shrinkage (i.e. was taut and unwrinkled) was measured. Results were as follows:

TABLE I

Sample No	Back Radiation	Front Radiation	Unaffected Area (Percent)
Control	None	None	16
A	1.5 Mrad. 150 KV	None	66
B	1.5 Mrad. 160 KV	None	73
C	1.5 Mrad. 170 KV	None	72
D	1.5 Mrad. 180 KV	None	85
E	1.5 Mrad. 190 KV	None	85
F	None	1.5 Mrad. 190 KV	77
G	1.5 Mrad. 190 KV	1.5 Mrad. 190 KV	88
(Commercial sheeting made according to the '178 patent)			13

The above tests were said to indicate that for most purposes radiations of over 170 KV should be used, and that radiations of 180 or more are preferred, as is use of combined front and back radiation (FF 31).

(c) <u>The '159 File Wrapper</u>

Serial No. 658,284 which resulted in the '159 patent had the following original independent claim 1:

> 1. Retroreflective sheeting comprising 1) a base sheet having a layer of retroreflective elements disposed over one of its surfaces; 2) a cover sheet disposed in spaced relation from the layer of retroreflective elements; and 3) a network of narrow intersecting bonds extending between said cover sheet and base sheet and comprising binder material thermoformed at the point of contact between said bonds and at least one of said cover sheet and base sheet so as to adhere the two sheets together and form a plurality of cells within which retroreflective elements are hermetically sealed; characterized in that the binder material is cured in situ after being thermoformed, whereby the bonds have increased bond strength to the cover sheet and base sheet. [(FF 34)].

In a first Patent Office action dated May 12, 1976, the Examiner rejected original claim 1, under 35 USC 103, as obvious over Holmen et al. U.S. Patent No. 3,924,929 stating:

> Holmen et al teaches the use of a retroreflecting sheet comprising a cellular cube corner means bonded by heat sealing, see column 4 lines 25-32. Heat sealing is obviously the structural equivalent of the thermo formed as claimed. Holmen et al see fig. 1 element 13, discloses wall members or serpta borders for cells that contain retroreflective cube corner elements that are disposed beneath a cover sheet that hermetically encapsulates an isolated plastic cell of polymethylmethacrylate. Holmen et al further teaches the use of a binder material that adheres to the encapsulated reflector. It would be obvious to one working in the art to cure a plastic retroreflective device "in situ" and to substitute microsphere reflectors for cube corner reflectors for only reasonable skill in the art would be required. [(FF 35)].

In a response dated September 27, 1976, original claim 1 was amended as follows (underlined material was added to the original claim):

> 1. (Amended) Retroreflective sheeting comprising 1) a base sheet having a layer of retroreflective elements disposed over one of its surfaces; 2) a cover sheet disposed in spaced relation from the layer of retroreflective elements; and 3) a network of narrow intersecting bonds extending between said cover sheet and base sheet and comprising binder material thermoformed at the point of contact between said bonds and at least one of said cover sheet and base sheet so as to adhere the two sheets together and form a plurality of cells within which retroreflective elements are hermetically sealed; <u>characterized in that the binder material is selected from materials that show increased adhesion to the cover sheet when a solid layer of the material that has been previously laminated to the cover sheet is cured, and further</u> characterized in that the binder material is cured in situ after being thermoformed, whereby the bonds have increased bond strength to the cover sheet and base sheet. [(FF 37)].

Amended claim 1 is substantially identical to independent claim 1 in issue.

The response was said to present formally arguments made at an interview with the Examiner and to present amendments that stress points of distinction

between the sheet material of claim 1 in issue and the prior art with particular focus on the following four points:

> A) The bonds in the chemical retroreflective sheeting are prepared by combining two operations that are conventionally considered as alternatives not used in combination;
>
> B) The claimed retroreflective sheeting requires use of only certain materials selected by a test set forth in the '159 specification and amended claims;
>
> C) The claimed retroreflective sheeting exhibits a significant improvement in properties over prior art sheet material; and
>
> D) The improvement in results obtained by the claimed retroreflective sheeting is an unexpected, unpredicted improvement. (FF 38).

The two operations referred to in A) supra, were said to be:

> 1) thermoforming of the bonds into sealing contact with a cover sheet; and
>
> 2) curing of the bonds (i.e. chemically reacting them to an insoluble and infusible conditions which is the definition of curing required by inventor McGrath in the '159 specification) after they have been thermoformed into sealing contact. [(FF 38)]

It was argued that conventionally, if bonds are thermoformed into sealing contact with an adherend, the bonds are considered complete and not further acted upon; that the thermoforming develops the needed seal or adhesion, and nothing more is necessary; that alternatively, a cured bond is typically formed by introducing curable material between two adherends, and then curing the material; that no bond exists until the curing operation; that the curing operation solidifies the material and thereby forms the bond (FF 38); that combining the thermoforming and curing steps would conventionally be considered superfluous because the thermoforming forms a load into sealing contact with a cover sheet and "why cure an already formed bond" and more than

that curing could be destructive of the bond; that for example, the rigidity introduced by curing a bond obtained by thermoforming can take away adhesion, with the result that the adherends can be readily pulled apart; and that an example of such a loss of adhesion occurs when the binder material used in Example 1 of the '159 patent is laminated to polyethylene terephthalate and then cured whereby the adhesion of the binder material decreases as a result of the curing operation (FF 38); and that as inventor McGrath had taught in the '159 specification one surprising aspect of the claimed invention is that some binder materials, as the acrylic binder materials of the '159 examples, do not provide improved bonds to carrier sheet polyethylene terephthalate (FF 19).

Only selected binder materials were argued to be useful in the retroreflective sheeting in issue. It was argued that inventor McGrath had discovered that "some materials develop increased adhesion to a cover sheet when they are cured after having been thermoformed into contact with the cover sheet"; that inventor McGrath in his '159 specification provided "a test by which such materials may be selected (see applicant's specification, page 10, lines 6 and 7 [viz. "Useful films and binder materials can be selected by the razor blade test reported in Example 1"] and page 13, first full paragraph [viz. the last paragraph of Example 1])"; that this test (the razor blade test) is recited in the amended claims to emphasize the distinctions exhibited by the sheet material of the '159 patent; that none of the cited references recognize that "some binder materials will increase in adhesion to a cover sheet when they are cured after being thermoformed into contact with a cover sheet"; and that none of the cited references "provide a basis for making the selection of materials that is necessary to achieve such an increase in adhesion" (FF 38). Despite the addition of claim language directed to the selection test, complainant continued its position that the prior art did not

make obvious its claimed sheeting which is cured in situ after thermoforming.

In the response dated September 27, 1976, it was also argued that test panels showing the differences in results measured in the shrink test of Example 12 between commercial sheeting made under the '178 patent and sheeting of the invention of the '159 patent were shown to the Examiner at an interview and that those tests were said to illustrate the fact that the adhesion between bonds in sheet material of the claimed invention and the cover sheet is much superior to the adhesion between the bonds and cover sheet in the then existing commercial sheet material; and that the '159 bonds have a better "hold" on the cover sheet, and because the cover sheet is held tightly, it is not as free to shrink in response to the shrinking forces that develop within it because of its biaxially oriented nature. The then existing commercial sheet material was said to have been made and sold for many years, and difficulties with such sheeting to have existed all during this period of time. It was further argued that the sheet material of the invention of the '159 patent was the first to provide an improved bond strength (FF 38). Thus it was said that there was nothing in the prior art cited by the Examiner which would suggest that the adhesion between bonds and a cover sheet, where the bonds are solid in nature and have been preformed against the cover sheet, would be improved by curing of the bonds; that in many cases, the adhesion of preformed bonds and a cover sheet is reduced by curing of the bonds; that curing of a bond would be expected to increase the number of chemical connections between molecules of the bond and would accordingly be expected to increase the rigidity of the bond and certain strength properties of the bond but that the cover sheet is outside the bond and only contacts the bond; and that increases in internal strength of a bond would not be expected to affect the degree of adhesion by the bond to a cover sheet (FF 38).

As stated in the '159 specification, the remarks dated September 27, 1976 acknowledged that the reason that the adhesion between the bond and the cover sheet is improved is not fully understood; that it is theorized that the improvement results because binder material in the bond migrates into the cover sheet when the bond is thermoformed in place, and that subsequent curing increases the tenacity with which the migrated material holds onto the cover sheet; and that "whatever the reason," nothing in the prior art suggests that thermoformed bonds be cured after thermoforming, and nothing in the prior art suggests that the cured bonds will have superior adhesion to the cover sheet (FF 38).

Referring to the cited Holmen et al patent, it was argued:

> The cited primary reference, Holmen et al, U.S. Pat. 3,924,929, column 4, lines 24-37, teaches various techniques for bonding septa to a cover sheet. But these techniques are all alternatives to one another. Holmen et al does not suggest using a combination of both thermoforming and curing in situ after thermoforming; it does not suggest that such a combination of operations would increase the adhesion between a bond and a cover sheet; and it does not teach the basis for selecting materials that will achieve such an increase in adhesion.
>
> * * *
>
> Applicant made an unobvious and significant advance in the art when he conceived that a <u>solid</u> material could be thermoformed into a network of bonds and then cured to develop increased adhesion to a cover sheet. (FF 39)

Thereafter in a Patent Office action dated November 8, 1976, the Examiner stated that the claims, which included claims 1, 3, 4, 5 and 7 that correspond substantially to the claims in issue, were allowable (FF 40).

Following reference to the McKenzie '178 patent in the '159 specification, including the original application filed in the Patent Office, the '178 patent was considered by the Examiner in the prosecution of the '159

patent. Thus in the first Patent Office action the '178 patent was cited as "related art" (FF 36). On January 25, 1977, the '178 patent was made of formal record by complainant and the following stated:

> Although McKenzie was not applied against applicant's claims in the office action dated June 25, 1976, it is the undersigned's recollection that McKenzie was a primary focus of the discussion at the interview between the undersigned and Examiner de los Reyes on September 16, 1976.
>
> In any event, for the record it is noted that McKenzie, U.S. Pat. 3,190,178 teaches:
>
> a) The basic structure of embodiments of applicant's invention as shown in applicant's Figures 1-4; and
>
> b) The basic method used to configure binder material into the structure illustrated in applicant's Figures 1-4.
>
> What McKenzie does not teach is that selection of binder materials according to applicant's teachings, and curing of those binder materials after they have been first thermoformed into place against the cover film, will produce increased adhesion between the cover film and bonds. In McKenzie's description of binder material in column 6, line 16 et seq., mention is made that thermosetting constituents can be used in the binder layer. But such a statement does not teach that increased adhesion between binder layer and cover film will result by choosing binder materials according to applicant's teachings and by thermoforming those binder materials into bonds and curing the bonds in situ in the manner taught by applicant.
>
> Sheet materials have been commercially manufactured under the teachings of McKenzie for many years, and those commercial products have exhibited a weakness in adhesion between the bonds and cover film. Although the weakness in adhesion of the commercial sheeting was known all those years, it was not until applicant's invention that the weakness in adhesion was overcome. (FF 43)

As the above comments make clear the '178 patent "was a primary focus of the discussion" between complainant and the Examiner at an interview on September 16, 1976 which was before the Examiner on November 8, 1971 stated that the

claims in issue were allowable. Also the comments note that the McKenzie '178 makes reference to "thermosetting" constituents.

(d) "Increased Adhesion" Means "Greater Resistance To Pulling Apart Of Cover Film and Binder Material"

Looking at the language of independent claim 1, the disputed claim language "increased adhesion" occurs with reference to selecting binder materials "that show increased adhesion to said ... cover sheet and base sheet when a solid layer of the material that has been previously laminated to said sheet is cured." The clause of claim 1, which precedes the language "increased adhesion", refers to adhering the base sheet comprising binder material and cover sheet together (FF 11).[7/] Thus the preceding clause of the claim plainly indicates a finding that "increased adhesion" means increased adherence of the binder material to the cover film material, or a greater resistance to pulling apart of the cover film material and binder material. A contrary reading would import a different meaning to "adhere" versus "increased adhesion". In addition the claim disclose that in the claimed encapsulated lens sheeting the bonds have "increased bond strength to the cover sheet and base sheet" after the thermoformed binder material is cured in situ.

As seen by the analysis, supra, of the '159 specification, inventor McGrath fully disclosed that there is a special challenge to obtain "lasting bonds" between the cover film and base (binder) sheet of the McKenzie '178

7/ Webster's Seventh New Collegiate Dictionary at 11 (1965) defines "adhesion" as "the action or state of adhering".

retroreflective sheeting (FF 12); that McGrath's lasting bonds "have improved adhesion to the cover film" such that the retroreflection is not greatly reduced by disruption of the bonds" between the cover film and base sheet" as in the prior art McKenzie '178 sheeting (FF 12, 14); that the "present bonds do more than that [improved internal strength properties], since they have improved adhesion to the cover film" (FF 14); that in some embodiments of the invention the cover film " cannot be pulled away [visibly free of bond material]... after curing" (FF 14); that "[u]pon the later curing of the bond ... [there is] greater resistance to a pulling apart of the cover film and base sheet material" (FF 14); that the "improved adhesion between the cover sheet and base sheet provides a significant advance in cellular retroreflective sheeting "(FF 14); that the curing in situ in Examples 3, 4, 5, 6 and 7 result in "firmly bonded" cover films (FF 22, 23, 24, 25, 26); that useful cover films and binder materials for the claimed encapsulated lens sheeting can be selected by the razor blade test reported in Example 1 and in that test "with a single-edged razor blade...[uncured] film could be easily removed, but the ... [cured] film was very tightly bound and could not be cleanly separated" from the cover film (FF 20); and that after "the curing operation, a force of 21×10^5 dynes per centimeter width ... was not sufficient to separate either cover film from the base sheet" (FF 30). The administrative law judge finds that the '159 specification supports a finding that the disputed claim language "increased adhesion" means a greater resistance to pulling apart of the cover film material and the binder material.

As seen by the analysis, <u>supra</u>, of the '159 file wrapper it was argued that "some materials develop increased adhesion to a cover sheet when they are cured after having been thermoformed into contact with the cover sheet"

(FF 38); that none of the cited references recognize that "some binder materials will increase in adhesion to a cover sheet when they are cured after being thermoformed into contact with a cover sheet" and that none of the cited references "provide a basis for making the selection of materials that is necessary to achieve such an increase in adhesion" (FF 38); that the adhesion between bonds in sheet material of the claimed invention and the cover sheet is much superior to the adhesion between the bonds and cover sheet in commercial material (FF 38); that the '159 bonds have a "better hold" on the cover sheet and the cover sheet is held tightly (FF 38); that there was nothing in the prior art which would suggest that the adhesion between bonds and a cover sheet would be improved by curing of the bonds and that in many cases, the adhesion of preformed bonds and a cover sheet is reduced by curing of the bonds (FF 38); that the reason that the adhesion between the bond and the cover sheet is improved is not fully an understood (FF 38); that nothing in the prior art suggests that the cured bonds will have superior adhesion to the cover sheet (FF 38); that Holmen et al "does not suggest that ... [both thermoforming and curing in situ after thermoforming] would increase the adhesion between a bond and a cover sheet (FF 39); that inventor McGrath made an advance when he conceived that a solid material could be thermoformed and then cured to develop "increased adhesion to a cover sheet" (FF 39); that McKenzie does not teach that a selection of binder and curing after thermoforming will produce "increased adhesion between the cover film and bonds" (FF 43); that McKenzie's mention of thermosetting constituents does not teach that increased adhesion between binder layer and cover film will result (FF 43); and that commercial products have exhibited a weakness in adhesion between bonds and cover film and it was not until McGrath's invention that the weakness in adhesion was overcome (FF 43). The administrative law judge finds

that the '159 file wrapper supports a finding that the disputed claim language "increased adhesion" means a greater resistance to pulling apart of the cover film material and the binder material.

Respondents admit that as used in the '159 specification, "improved adhesion to the cover film" means that the binder material cannot be easily removed from the cover film; that the binder material is "very tightly bound" and can "not be cleanly separated" from the cover film; and that "bond strength" is used to mean the force necessary to remove the top film from the base sheet (RPF 387). However respondents argue that the testimony of their expert Sharpe, which testimony is more than ten years after the February 17, 1976 filing of the '159 patent application, is that inventor McGrath in the '159 patent in stating that the bonds do more than exhibit improved internal strength properties (cohesion) "since they have improved adhesion to the cover film" is disclosing in the '159 specification that the bonds give rise to improved interface adhesion at the juncture of the bonds and the cover film; that this interpretation is the only plausible one to Sharpe, because there are only two possible properties involved in considering the bonds in question, i.e., (1) the internal strength or cohesion within the bond material, and (2) interfacial adhesion between the bonds and the cover film; and that if as the '159 patent discloses, the present bonds do more than improve the internal strength or cohesion because "they have improved adhesion to the cover film," it can only be referring to interface adhesion (RPF 390, 391) (FF 318).[8/]

8/ In 1988, inventor McGrath testified that "adhesion" as used in the '159 patent is the force necessary to remove the top film from the base sheet and that the claimed language "increased adhesion" means adhesion is increased after curing as opposed to the same material measured before curing (FF 52, 84, 91). Complainant's expert DeVries in 1988 testified that "adhesion" as used in the '159 patent means how tightly the cover sheet cover sheet is bounded by the base material (FF 278, 280) and that "improved adhesion" can mean improved adhesion in or near the interface region (FF 302).

Sharpe's definition of "interface adhesion" is Van der Waals forces or valance bonding or hydrogen bonding or some of the other kinds of forces that are active between atoms and molecules. There also may be chemical or covalent bonds if the chemistry is possible (FF 322, 323), although Sharpe will not say that the peel strength has anything to do with or is determined by or is derived from anything that happens at the interface (FF 323) even though inventor McGrath in his Example 11 employs a peel strength test for determining the force necessary to "pull the cover film away from the base sheet" (FF 30).

According to complainant's DeVries, it is a little bit fallacious to talk about an interface in the McGrath '159 invention because interface envisions one plane and another plane and even though a mirror may look smooth, to an atom or molecule a mirror is not smooth; and that in engineering, a mirror could have very deep caverns or crevices. DeVries believes that in the thermoforming operation of the '159 patent, there may be molecules from the binder migrating into crevices of the cover sheet and referring to words of the '159 patent that, upon later curing the "migrated material may become more firmly interlocked or interwined with the molecular structure of the cover film" with a boundary between the binder and cover sheet which has become defused and which boundary has no interface (FF 283). DeVries testified that there is an "interphase" and what McGrath in the '159 patent is measuring involves lots of things (FF 287) and that what inventor McGrath is concerned with is a mechanical reaction between the binder and cover sheet (FF 290). DeVries defined "interphase" as that region where there is intertwining of two separate boundaries while "interface" is a sharp demarcation from one boundary

to another boundary (FF 565). DeVries knows of no tests that can measure interface adhesion in solids (FF 288) although interface adhesion has been used to refer to the local strength of the physical bond where the two faces of the laminate are joined (FF 293). DeVries believes that there would be Van der Waals forces in the '159 invention between the binder and the cover film but that there is more involved than Van der Waals forces although he knows of no one who has been able to explicitly separate Van der Waals forces from mechanical interlocking forces (FF 289). Respondents' Sharpe testified that what DeVries said was "certainly a model and it certainly is theoretically possible. Whether it actually happens or not, we don't really know" (FF 323).

Respondents' expert Smook testified that there is a fairly weak possibility that there is a chemical bonding between the binder material and the cover film in the areas in which they are sealed in the '159 patent (FF 373). He agrees with DeVries that the surface between the binder layer and the cover sheet is an irregular surface. He takes issue with DeVries that Van der Walls forces do not play a major role in the formation of adhesive bonds. Smook will not take issue with a statement that it is possible for material to migrate across the interface and react covalently to form some bonds but contends that such is a secondary effect and that the primary effect is the Van der Waals forces functioning at the interface (FF 377). Smook thinks DeVries made a very good analogy between "interface" and "interphase" (FF 377). Smook further testified that the term "adhesion" is used loosely by the lay public and the scientific community (FF 387) but that while generally "adhesion" is a broad term, in the way the '159 patent is worded, "it can't be anything but the interphase adhesion that we've been talking about all week" and that "adhesion can mean nothing but this interface adhesion that we talked about earlier" (FF 389).

Complainant Bingham's understanding of the term "interface adhesion" is the general area between two layers. To Bingham, the term "interphase" means some mingling took place between molecules or layers although "interphase" and "interface" mean about the same thing (FF 186).

As seen by the '159 patent, when the patent was filed for on Feb. 17, 1976 (FF 10) neither the terms "interface" nor "interphase" was used. Also those terms are not found in the '159 file wrapper (FF 34 to 45). Moreover as inventor McGrath stated in the '159 patent, the "reasons for the improvement in results are not fully understood" and he is "not limiting ourselves to a particular mechanism" (FF 14). The same position was emphasized by inventor McGrath during the prosecution of the '159 patent when it was argued that the "reason that the adhesion between the bond and the cover sheet is improved is not fully understood" (FF 38). It is axiomatic that an inventor need not comprehend the scientific principles on which the practical effectiveness of his invention rests. See e.g., Diamond Rubber Co. v. Consolidated Rubber Co. 220 U.S. 428, 435-36 (1911).

The record establishes that respondents' Sharpe did not believe that one needs to understand or have definite proof of interface adhesion to use the teachings of the '159 patent to make the sheeting (FF 341). He also agreed that McGrath in his '159 patent taught that to solve the problem of the McKenzie '178 patent sheeting relative to the separation of the base material, one should select the binder material and the cover sheet having a certain relationship with one another; that one can, with certain cover sheets, make a base sheet from a material that can be cured with "cure" defined as the means of crosslinking or chain extension going from a relatively soluble and relatively fusible state to a relatively insoluble and relatively infusible

state (FF 324); that if the binder material is cured one will solve the problem of the cover sheet separating from the base sheet and that one will get a higher quality and more useful product which is the important thing about the '159 patent (FF 325); and that it is fair to say, reading the '159 patent as a whole, that what inventor McGrath is trying to accomplish is to keep the cover sheet with the base sheet so that they do not come apart (FF 326). While Sharpe testified that interface adhesion cannot be measured (FF 328, 329, 330, 331, 353, 358), inventor McGrath in Example 11 of the '159 patent was able to measure quantitatively the force to separate the cover film away from the base binder sheet in an uncured sheeting construction and quantitatively determine that a greater force was not sufficient to separate cover film from the base binder sheet after the curing in situ operation (FF 30).

Sharpe, who does not consider himself an expert in retroreflective sheeting (FF 340) and has never conducted tests on any retroreflective sheeting including complainant's and respondents' retroreflective sheeting (FF 346), referring to the amendment to original claim 1 in the prosecution of the '159 patent (FF 37) and the remarks accompanying the amendment (FF 38, 39), testified that the razor blade test as described in the '159 patent (FF 20) doesn't measure adhesion in the interfacial sense "but that of course doesn't mean that was not the way it was sold to the patent office, as these materials possessing some sort of magic property which allowed them to pass that test" (FF 351) and that the razor blade test of the '159 patent was "not to measuring interface adhesion which is the way it was sold to the patent office" (FF 356). In the remarks accompanying the amendment to original claim 1 of the '159 application as filed it was argued, <u>inter alia</u> that none of the

cited references recognize that "some binder materials will increase in adhesion to a cover sheet when they are cured after being thermoformed into contact with a cover sheet"; that the cited references do not "provide a basis [the razor blade test] for making the selection of materials that is necessary to achieve such an increase in adhesion" (FF 38); and that the '178 patent does not teach that "increased adhesion between binder layer and cover film will result by choosing binder materials according to applicant's teachings" (Emphasis added) (FF 43). Those arguments, consistent with the disclosure of the '159 patent as it was originally filed in the Patent Office on February 17, 1976 (FF 20), refer to an increase in adhesion to the cover sheet which is illustrated in the '159 specification through the razor blade test. The administrative law judge finds no basis for the conclusion that the arguments rested on "some sort of magic property" or were otherwise misleading.

Based on the foregoing, the administrative law judge finds that the disputed claimed language "increased adhesion", irrespective of any underlying theory, means a greater resistance to the pulling apart of a cover film and binder material when a solid layer of the binder material that has been previously laminated to said cover film is cured and that a greater resistance relates to selection of cover films and binder materials useful for the claimed encapsulated lens sheeting.

2. 35 U.S.C. § 102(b)

The thrust of respondents' argument is that each of independent claim 1 and dependent claims 3, 4, 5 and 7 is anticipated by the McKenzie '178 patent (R Post at 37 to 39). Respondents argue that the '178 patent has the passage

"[w]hile thermosetting constituents may be employed in the binder layer 15, the layer as a whole must exhibit a thermoplastic or thermoadhesive phase so that it can be converted by heat into a viscous flowable or movable condition during hermetic sealing" and discloses that the sheeting must be durable under a variety of weather conditions; that in McKenzie's deposition, McKenzie testified that in suggesting thermosetting constituents, he was suggesting that thermosetting constituents might be employed and cured and that said passage "does not state that the curing is prior" to thermoforming; that complainant's Bingham, a career employee of complainant, testified that a thermosetting material is a curable material and that "thermosetting" refers to a material before it is cured, whereas "thermoset" refers to the same material after curing; and that as respondents' expert Smook testified, in order to have any practical utility, a thermosetting constituent must go through a thermoplastic phase in order to be fabricated. Because McKenzie at col. 6, line 21, "refers to 'thermosetting' (not 'thermoset') constituents in a binder material which is to be thermoformed using heat and pressure", respondents argue that the "only logical interpretation" is that curing to form the thermoset final product will occur after thermoforming" (R Post at 38, 39, R Post R at 20).

Complainant, in arguing that respondents have not sustained their burden, maintains that there is no teaching in the '178 patent that the "thermosetting constituents" therein are reacted or cured after thermoforming of the binder layer into a network of bonds as required in the '159 patent nor is there any teaching of binder materials that would achieve increased adhesion to the cover sheet upon such curing; that respondents ignore a specific teaching of the McKenzie '178 patent about maintaining the flowability of the binder layer

above a certain temperature which complainant argues would suggest the use of thermosetting constituents; that the McKenzie '178 patent itself makes it perfectly clear that McKenzie's binder layer was not cured into a "relatively insoluble and infusible state" as required by the '159 patent because McKenzie specifically states that his finished sheeting can be edged sealed and that if the McKenzie sheeting was "infusible" after thermoforming, it would be impossible to edge seal that product; and that McKenzie gives no indication as to what thermosetting constituents to use, or any teaching about the selection of compatible binder materials and cover films (C Post at 5, 6).

Complainant argues that acceptance of respondents' interpretation of the McKenzie '178 patent would require findings that McKenzie recognized that the sheeting described in his '178 patent would have a cover sheet delamination problem which problem could be solved by using a curable binder that was compatible with the cover sheet and curing the binder after thermoforming; and that for twelve or more years he allowed complainant to suffer the expense associated with replacing damaged signs while never mentioning how the problem could be corrected (C Post at 10, 11).

The staff, in arguing that respondents have not sustained their burden, urges that the McKenzie '178 patent was before the Patent Office during the prosecution of the '159 patent and is cited in the specification of the '159 patent; that although McKenzie states that thermosetting constituents may be used in the binder layer, those constituents are not added to cure the network of bonds, but to improve the heat stability of the binder layer; that there is no teaching in McKenzie of curing the thermosetting constituents after thermoforming of the binder layer into a network of bonds; that McKenzie also does not suggest cross linking the binder layer to an infusible condition; and that nothing in McKenzie teaches how to select and cure a binder.

In order for the '159 patent to be invalid under 35 U.S.C. § 102(b) each and every element of the claimed invention must be actually disclosed in a single prior art reference. Akzo N.V. v. International Trade Commission 808 F.2d 1471, 1479, 1 U.S.P.Q. 2d 1241, 1245 (Fed. Cir. 1986) cert. denied 107 S. Ct. 2410, 96 L.Ed. 382 (1987). Connell v. Sears, Roebuck & Co., 722 F.2d 1542, 1548, 220 U.S.P.Q. 193, 198 (Fed. Cir. 1983); W.L. Gore & Associates, Inc. v. Garlock, Inc., 721 F.2d at 1554, 220 U.S.P.Q. at 313. Moreover the reference must have all of the claimed elements combined in the same way and performing the same functions. Structural Rubber Products Co. v Park Rubber Co. 749 F.2d 707, 706, 223 U.S.P.Q. 1264, 1271, (Fed. Cir. 1984). Also there must be a teaching in the reference with respect to the entirety of the claimed invention. In re Certain Automatic Crankpin Grinders, 205 U.S.P.Q. 71, 76 (Comm. 1979). The Court of Appeals for the Federal Circuit has stated that the test of anticipation is that only that which would literally infringe if later in time does anticipate if earlier in time. Lewmar Marine Inc. v. Barient Inc., 827 F.2d 744, 747, 3 U.S.P.Q. 2d 1766, 1768, (Fed. Cir. 1987) cert. denied 108 S. Ct. 702, 98 L.Ed. 653 (1988). In addition, when an alleged infringer is relying only on prior art that was before the Patent Office, the "burden to overcome the presumption of validity by clear and convincing evidence is made even heavier..." American Hoist & Derrick Co. v. Sowa & Sons, Inc., 725 F.2d at 1359, 220 U.S.P.Q. at 770; See also, Fromson v. Advance Offset Plate, Inc. 755 F.2d 1549, 225 U.S.P.Q. 26, 31 (Fed. Cir. 1985).

The administrative law judge finds that the '178 patent does not disclose the entirety of the invention recited in the claims in issue. While the McKenzie '178 patent discloses that "thermosetting constituents may be employed in the binder layer," the '178 patent does not disclose that its

binder layer, after the thermoforming, is cured in situ, as inventor McGrath in the '159 patent has defined "curing", viz. "chemical reactions of constituent ingredients, such as crosslinking or chain-extension reactions, which result in relative insolubility and infusibility of the cured material." (FF 14). While McGrath in the '159 patent so defined "curing", the term "curing" by itself generally may or may not refer to obtaining cured material with "relative insolubility and infusibility." As respondents' expert Smook testified:

> It's [Curing is] a continuum just like many things in this world are, and when you say a polymer begins to cure, it progresses along that course. Eventually it becomes insoluble. Eventually it becomes infusible. Eventually it can no longer be handled in any way at all, it's totally crosslinked. But it's not just uncrosslinked and crosslinked. That's the point.
>
> JUDGE LUCKERN: Just one more. Would you say that you can have a crosslinked system and yet it would still be soluble?
>
> THE WITNESS: Very lightly crosslinked, Your Honor, because it if becomes anything beyond that it begins to form a very very loose gel called, you can break that gel up because it's so fragile, and simply a stirring rod in a solution will make that into microgel particles. But the fact of the matter is that once it gets to that stage it's crosslinked [(FF 506)].
>
> * * *
>
> A Frequently "melting point" is used pretty loosely; and I suspect that's the case here [referring to the prior art Lemelson patent]. Despite a crosslinked structure there's what polymer chemists like to think of as a deformation temperature, which frequently is referred to that way as a softening point, not a -- not a fusion in the normal sense of the word.
>
> But if it's crosslinked to an extent at all it's infusible in the sense that it cannot be reprocessed, melted, and subsequently reformed.
>
> Q Doctor, isn't it -- is it your testimony that if I have any crosslinking polymer at all that it is not going to be able to rethermoform over and over again?

> A Have to define what you mean by "crosslinked." That's a very loose term. Crosslinking, or curing, as we've been discussing it here today, is a continuing thing, starting with simply chain extension; and then subsequently branching.
>
> Ultimately the formation of a loose network, and finally a tight network. And you're certainly right in saying that a tight network -- entire crosslink network is infusible.
>
> The -- all I'm suggesting here is that they haven't defined how far the structure has been crosslinked; and it's impossible to tell whether it's crosslinked enough so that it cannot be subsequently reformed by melting.
>
> And the way that reads, I would guess that it cannot be. But that's subject to interpretation. (FF 146).

Complainant's expert DeVries is in agreement with Smook in that DeVries testified that the term "cure", out of context of the '159 patent, can have a lot of meanings (FF 277). Smook also testified that an insoluble and infusible condition means a material is a tight gel and that there can be "considerable chain extension before insolubilization occurs" (FF 402, 505).

The administrative law judge can find no teaching in the McKenzie '178 patent that any polymerization was to continue to the state of a "relative insolubility and infusibility of the cured material" as McGrath requires in the '159 patent.

Moreover while the '159 patent and its prosecution make clear that useful cover films and binder materials can be selected by the razor blade test reported in Example 1 of the '159 patent, the phrase "thermosetting constituents" in the '178 patent reads on any and all thermosetting constituents. The administrative law judge finds not even a suggestion in the McKenzie '178 patent about any selection of particular thermosetting constituents such that the binder materials and cover films are compatible.[9/]

9/ Consistent with the teachings of the '159 patent, inventor McGrath in deposition testified that merely adding curable material to the '178 composition is not enough (FF 96).

That the '178 patent does not disclose the '159 claimed invention in issue in its entirety is further supported by respondents' attempt to rely on testimony, some twenty seven years after the filing of the application for the '178 patent, to complete the teaching of the '178 patent. Assuming such testimony could complete the teaching of the '178 patent, the administrative law judge finds it inconclusive. Thus inventor McKenzie in his deposition testified that he would rather have the '178 patent stand on its own rather than have him try to interpret in 1987 what was put into the McKenzie '178 patent when it was filed on June 29, 1961 (FF 118) and that because it is some twenty seven years later McKenzie did not think himself qualified to make any statement beyond which is in the '178 patent (FF 117)[10/] Moreover McKenzie testified in 1987 that in 1961, when the McKenzie patent was filed, he did not contemplate that the organic resinous material that complainant was using in the then prior art "exposed lens" sheeting could be used as a binder material in McKenzie's '178 encapsulated lens sheeting because the binder material which complainant was then using in the exposed lens sheeting was thermosetting (FF 118). He also testified that he wanted some thermosetting characteristics in the '178 binder "to stabilize the heat flowability resistance" (FF 119) and to "increase higher temperature stability" (FF 117).

While respondents rely on 1988 testimony of complainant's Bingham, Bingham testified that it was his understanding that the binder in the McKenzie '178 patent was thermoplastic (FF 68). Also a United States Miyata

---

10/ McKenzie worked for complainant for over thirty years and is now retired (FF 115). With the exception of one time involving a breakdown of the seal bond in the field, after McKenzie developed the '178 sheeting, McKenzie "essentially stepped out of the picture" (FF 119).

patent filed by one of the respondents in March 1985 and based on a Japanese foreign priority application date of March 15, 1984 (FF 515)[11/] describes a typical example of the Japanese counterpart of the '178 patent as having a support binder film of thermoplastic polymer (FF 519). While the Miyata patent also states that the Japanese counterpart of the '178 patent describes "generally that hot-melt type thermosetting polymer may be used as the material for the support film" (FF 520), it later states that the thermoplastic polymer in the Japanese counterpart of the '178 patent is "replaced" in the Japanese counterpart of the '159 patent by a polymer of a "hot-melt type setting polymer" (FF 522).[12/]

McKenzie's 1987 testimony that "thermosetting constituents" were suggested to stabilize the heat flowability resistance is consistent with the testimony of complainant's expert Grunzinger that for the purpose of raising the melting point of the McKenzie bead binder layer, it would be normal to cause reaction of the thermosetting constituents prior to the thermoforming and that such a crosslinking would leave the bead binder layer thermoplastic and suitable for thermoforming and would be of the type referred to in the prior art Lemelson patent where Lemelson states that he used crosslinked material to increase the melting point of a thermoplastic polymer which polymer still melted after crosslinking and which meant that it is still thermoplastic after crosslinking (FF 131, 133, 134). Consistent with this

---

11/ The accused sheeting is prepared in accordance with the Miyata patent (FF 514)

12/ The issue of alleged infringement of the '159 between complainant and respondents commenced as early as 1983 (FF 229 to 237).

interpretation, the sentence in the McKenzie '178 patent immediately following the sentence containing "thermosetting constituents" reads:

> "Binder layers 15 or 16 of the final [McKenzie] product should not flow at temperature below about 150° F, where the final product is to be used in application exposed to solar heat."

(FF 113). Again consistent with this interpretation, respondents' expert Sharpe agreed that some adhesives are primarily thermoplastic in nature but have some thermosetting constituents utilized to upgrade the characteristics of the adhesive and testified that he is more or less familiar with those adhesives (FF 344). In a 1969 article Sharpe did state that adhesives are classified as thermoplastic or thermosetting and that "[o]thers are primarily thermoplastic in nature but have thermosetting resins added to upgrade properties of the base material" (FF 345).

Respondents argue that the citation of the '178 patent during the prosecution of the '159 application does not preclude it from being the basis of an invalidity determination, citing Surface Technology, Inc. v ITC, 801 F.2d 1336, 1339-40, 231 U.S.P.Q. 192, 195, 196 (Fed. Cir. 1986).[13/] The administrative law judge finds the Surface Technology case distinguishable on its facts. In that case the Court found that three affidavits were an important factor in overcoming a section 103 rejection on certain prior art during the Patent Office prosecution of a patent and that subsequent testimony

---

13/ The record establishes that the McKenzie '178 patent not only was cited by McGrath in the '159 specification and considered by the Patent Examiner (FF 36) but also commented on at some length by counsel during the prosecution of the '159 patent, including a reference made to McKenzie's statement that thermosetting constituents can be used in the binder layer (FF 43). Also the '159 specification discloses that the '159 claimed invention is an improvement over the '178 sheeting (FF 12, 13).

of two of those affiants in the section 337 investigation, after the issuance of the patent, compromised the strength and effectiveness of the affidavits. The administrative law judge finds nothing in the record that compromises the position taken by the Examiner in issuing the '159 patent over the McKenzie '178 patent.

Based on the foregoing the administrative law judge finds that respondents have not sustained their heavy burden to overcome the presumption of validity of the claims in issue by clear and convincing evidence that said claims are anticipated under 35 U.S.C. §102(b) by the '178 patent.

3. 35 U.S.C. § 103

Respondents submit that the claims in issue are invalid under §103, for want of unobviousness over the McKenzie '178 patent taken with any one of the prior art United States patents to Lemelson, Frigstad, Palmquist, Schwab or Hendricks. Respondents argue that the McKenzie '178 patent in stating that thermosetting constituents may be employed in the binding material, suggests that one skilled in the art consider the literature relating to curable materials; that the patents to Lemelson and Frigstad describe laminates which are cured after "thermoforming" in order to improve the adhesive or ply strength of the laminates; and that a patent to Hendricks discloses electron beam irradiation for improving cohesive strength of adhesives without affecting their adhesive properties. Hence in view of Lemelson, Frigstad or Hendricks, it is argued that it would have been obvious in 1974 to one skilled in the art to formulate McKenzie's binder material of "thermosetting constituents" as suggested by McKenzie, and to cure either by electron beam irradiation, as per Lemelson or Hendricks, or by heat, as per Frigstad (R Post at 39, 40).

Respondents further argue that United States patents to Palmquist and Schwab teach retroreflective sheeting having cured binder materials and that complainant was selling such sheeting prior to 1974. Hence it is argued that it would have been obvious in 1974 to make McKenzie's binder material of thermosetting constituents and cure it to improve its "cohesive strength"; that it was known in 1974 and earlier that curing was a technique for improving "cohesive strength" of polymeric binder material; and that in view of Palmquist, Schwab or complainant's 1974 vintage retroreflective sheeting "with cured binder material", it would have been obvious to make McKenzie's binder material of thermosetting constituents and cure it after thermoforming (R Post at 40, 41).

Complainant in maintaining that respondents have not sustained their burden, argues that the Lemelson, Frigstad, Hendricks, Palmquist or Schwab patents disclose only the concept of curing materials by various means such as electron beam curing; that if complainant was alleging that inventor McGrath in the '159 patent invented curable materials, or invented the concept of curing by electron beam radiation, then perhaps those references would be of some import but that such is not the case; that complainant will concede that at the time McGrath made the claimed invention in issue it was not necessary to go to the prior art patents to learn about polymers that could be cured by crosslinking to an insoluble and infusible material and that one could obtain said polymer by going to any good polymer chemical supply house which, in fact, was what complainant did. It is argued that there is no suggestion in any of the prior art references, either individually or in combination, that would predict the unexpected improvement in the adhesion between the binder layer and cover sheet that is evidenced by the '159 patent (C Post at 11, 12, 13, 16).

Complainant also argues that objective evidence of commercial success and the failure of others to solve the McKenzie delamination problem clearly

support the nonobvious nature of McGrath's '159 invention (C Post at 17, 18).

The staff, in alleging that respondents have not sustained their burden, argue that the McKenzie '178 patent does not suggest a binder material that has intersecting bonds that are thermoformed and cured and have increased adhesion to the cover sheet and that there are significant differences when the teachings of Lemelson Frigstad, Palmquist, Schwab and Hendricks are compared to the claimed invention in the '159 patent. Secondary considerations of nonobviousness are also said by the staff to demonstrate that the invention of the '159 patent is not obvious (S Post at 26, 27, 28, 29).

A patent may be held invalid if the invention claimed does not satisfy the requirement for nonobviousness of 35 USC §103 which reads in pertinent part:

> A patent may not be obtained though the invention is not identically disclosed or described as set forth in section 102 of this title, if the differences between the subject matter sought to be patented and the prior art are such that the subject matter as a whole would have been obvious at the time the invention was made to a person having ordinary skill in the art to which said subject matter pertains.

Graham v. John Deere Co., 383 U.S. 1, 17-18, 148 U.S.P.Q. 459, 467 (1966) articulated the test for determining obviousness under §103:

> [T]he scope and content of the prior art are to be determined; differences between the prior art and the claims at issue are to be ascertained; and the level of ordinary skill in the art resolved. Against this background, the obviousness of the subject matter is determined. Such secondary considerations as commercial success,[14/] long felt but unsolved needs, failure of

14/ The Federal Circuit recently in Rotron, Inc. v. U.S. International Trade Commission Inv. No. 337-TA-228 (slip opinion at 7, 8, 9 (Feb. 18, 1988) ("not prepared for publication in printed volume"), in reversing the Commission's finding that Rotron's commercial success was unrelated to the claimed invention in issue, stated that the reaction of the market place to a patented invention is often significant to an objective evaluation of obviousness and that a new device that achieves commercial success, displacing the products of the prior art, has met a far more pragmatic test than that which can be applied in a courtroom.

> others, etc., might be utilized to give light to the circumstances surrounding the origin of the subject matter sought to be patented. As indicia of obviousness or nonobviousness, these inquires may have relevancy.

Thus obviousness is a question of law based on factual inquires Akzo N.V. International Trade Commission, 808 F.2d at 1480, 1 U.S.P.Q. 2d at 1246.

(a) Scope and Content of the Prior Art

Complainant has admitted that the McKenzie '178 patent teaches both the basic structure of embodiments of the '159 claimed invention as shown in FIGS. 1 to 4 of the '159 patent and the basic method used to configure binder material into the structure illustrated in FIGS. 1 to 4 of the '159 patent (FF 43).

The Lemelson patent, U.S. Pat. No. 3,676,249 (the '249 patent), issued on July 11, 1972 to J.H. Lemelson on an application filed in 1963 which application was a continuation-in-part application filed on April 9, 1957 (FF 138). The '249 patent relates to methods for continuously forming and processing composite materials such as composite sheet materials, articles and packaging made of a plurality of members which are continuously laminated or welded together and thereafter treated to improve the physical characteristics of at least one or more components of said composite material. The method involves:

> (a) feeding from a first supply means an elongated base of solid synthetic polymeric material which, upon being subjected to high energy irradiation, will undergo a substantial change in molecular structure manifested as a substantial increase in strength and resistance to heat;
>
> (b) feeding from a second supply means-solid glass fibers as reinforcing material for said polymeric material;
>
> (c) generating and directing high energy radiation, which is operative to produce said substantial change, against

> said base and said reinforcing material while holding them in contact with one another; and
>
> (d) containing the irradiation of the base and reinforcing material in contact with one another for a sufficient time and at a sufficient intensity for increasing the strength and resistance to that of the base material.

(FF 139, 141). The '249 patent, in describing an embodiment, states an end effect of the disclosed invention is to convert, for example, a thermoplastic polymer such as polyethylene from a relatively soft material having a low melting a point to a cross linked material of substantially greater rigidity, strength and higher melting point (FF 140).

The Fristad patent, U.S. Pat. No. 3,472,730 (the '730 patent), issued on October 14, 1969 to R.A. Frigstad on an application filed in 1967 (FF 149). The '730 patent provides filament-reinforced sheets from which articles are laminated that have greatly enlarged interply or interlaminar strength over that exhibited by articles laminated from prior art filaments-reinformed resinous sheeting. The filament-reinforced resinous sheeting includes a thin flexible layer of high strength reinforcing filaments, preferably a layer of nonwoven collimated filaments, and a heat-curable resin composition coated onto the filaments. In addition, a separate exterior film about 1/2 to 4 mils in thickness is carried on at least one side of the layer of coated filaments. This film comprises a heat-curable resin composition that includes (1) a high-strength heat-curable resin and (2) a modifying resin that substantially increases the capability for elongation of the film resin composition when cured (FF 150).

The Palmquist patent, U.S. Pat. No. 2,543,800 (the '800 patent), issued on March 6, 1951 to P.V. Palmquist et al on an application filed in 1947. On its face the '800 patent is assigned to complainant (FF 154). The '800 patent

relates to reflex light reflectors of the class having a "catadioptric" structure wherein a layer of spherical glass beads is partially embedded in a film structure containing light-reflective pigment underlying the spheres to produce, in combination, refraction and reflection of incident light beams. According to the '800 patent, the optical characteristics can be secured by means of said catadioptric structure wherein the minute spherical lenses have a refractive index of approximately 1.9, the transparent undercoating contains transparent color pigment, and the reflective layer contains metallic flake pigment. The Palmquist '680 patent, which issued on September 16, 1946, discloses an enclosed lens retroreflective sheeting. The '178 patent teaches that while the teaching of the '680 patent is very effective to provide brilliant reflex-reflection of light under wet or dry conditions, the maximum brilliancy of reflex-reflective light return for such sheeting is not as great as that higher brilliancy of reflex-reflection possible when using exposed-lens structure of the type taught in the exposed lens retroreflective sheeting developed in the late 1930's and early 1940's (FF 100, 103).

The Schwab '435 patent issued on March 5, 1974 to Kurt Schwab on an application filed in 1970 (FF 159). The '435 patent is directed to an improvement in reflex light reflection sheet in which a spacer layer, which has a vacuum deposited material on the surface opposite the spherical bodies, is a transparent plastic foil of substantially constant thickness with said foil snugly conforming to and bearing against the rear contour of the spherical bodies (FF 160). Complainant admits that the Schwab patent relates to enclosed retroreflective lens sheeting (C Post at 12).

The Hendricks patent, U.S. No. 2,956,904 (the '904 patent), issued on October 18, 1960 to J.O. Hendricks on an application filed in 1960. The '904

patent on its face is assigned to complainant (FF 164). According to the '904 patent an adhesive coating composition is subjected to a physical treatment involving the use of irradiation which results in pressure sensitive adhesive tapes said to have improved and novel adhesive characteristics (FF 164).

(b) Differences Between the Prior Art and the Claims in Issue

As found by the administrative law judge in the section IA.2 supra titled "35 U.S.C. §102(b)," the McKenzie '178 patent does not teach, as taught by the '159 patent, that a selection of binder materials and the curing of those binder materials, after they have been thermoformed into place against cover films, will produce increased adhesion between the cover films and binders in an encapsulated lens retroreflective sheeting. As respondents' Smook testified, neither the Lemelson '249 nor the Frigstad '730 patents relate to retroreflective sheetings; neither patent has a base sheet with retroreflective elements disposed over one of its surfaces; neither patent has a cover sheet disposed in space relation from the layer of retroreflective elements; and neither patent teaches thermoforming narrow intersecting bonds in retroreflective sheeting into sealing content with a cover sheet (FF 152). Also as Smook testified, while in both the Frigstad and Lemelson patents, it is the entire structure that is being cured, in the '159 patent, it is only the base layer and the network of bonds that are cured and the cover sheet is not cured (FF 153).

Referring to the remaining patents relied on by respondents, the retroreflective sheetings of the Palmquist '800 and '680 patents do not have a cover film in spaced relation from a bead binder layer and do not have a network of narrow intersecting bonds (FF 157). The Schwab '435 patent has no

thermoforming of the adhesive layer into contact with a cover sheet in its retroreflective sheeting (FF 161). Neither the Schwab nor Palmquist patents disclose the cellular-like structure of the '159 sheeting (FF 163). The Hendricks '904 patent does not disclose a retroreflective sheeting (FF 164, 165).

(c) Level of Ordinary Skill in the Art

Respondents, relying on testimony of its expert Smook, argue that the claimed invention in issue is obvious over the cited art (R Post at 39 to 41). Complainant argues that its expert Grunzinger, "the only witness qualified as an expert on retroreflective sheeting," testified that the art relied upon does not teach the '159 invention in issue (C Post at 15, CPF 193). While both respondents and complainant rely on expert testimony the issue of obviousness is determined entirely by reference to a hypothetical "person having ordinary skill in the art". It is only that hypothetical person who is presumed to be aware of all the pertinent prior art. Even an actual inventor's skill is irrelevant to the inquiry because the statutory emphasis is on a person of ordinary skill and inventors as a class sets them apart from the workers of ordinary skill. Standard Oil Company v. American Cyanamid Company 774 F.2d 448, 454, 227 U.S.P.Q. 293, 297-98 (Fed. Cir. 1985).

A person of ordinary skill in the art is presumed to be one who thinks along the line of conventional wisdom in the art but is not "one who undertakes to innovate, whether by patient, and often expensive, systematic research or by extraordinary insights". It is up to the administrative law judge to determine the level of skill of the hypothetical person and what that person would have been able to do when in possession of the prior art, the scope and contents of which the administrative law judge also determines. Id.

As to the level of ordinary skill respondents argue that such a person would likely have an advanced degree in chemistry and at least five years experience in the area of polymeric adhesives and polymeric laminates (RPF 332). Complainant argues that those persons at complainant working in the design of retroreflective sheeting in the time period prior to 1974 had a number of different qualifications -- a master's degree in organic chemistry as has Bingham, no college degree as has McKenzie (inventor of the '178 patent) or a Ph.D. in chemistry as has inventor McGrath (CPF 187); that in complainant's laboratory today which is concerned with retroreflective sheeting the average experience level is about five to six years (CPF 189); and that one skilled in the art today in high intensity retroreflective sheeting would have a bachelor's degree or be someone without a degree but which was well-read in chemistry (CPF 190).[15/] The staff argued that in this investigation the evidence shows that a person of ordinary skill in the art of delamination problems would probably be a person with a doctorate in chemistry, or a person with a bachelors degree in chemistry or chemical engineering with significant experience in the field of polymers and adhesives and preferably such a person would have experience in retroreflective sheeting, but it would not be necessary (S Post at 26).

The Commission, among the factors considered in assessing the level of ordinary skill in the art, citing Orthopedic Equipment, Inc. v. All Orthopedic Appliances, Inc., 707 F.2d 1376, 1381 217 U.S.P.Q. 1281, 1285 (Fed. Cir. 1985)

15/ The record indicates that complainant has an employee who does not have a degree but yet may be a next "scientist" of a division of complainant (FF 272).

listed (1) the educational level of the inventor, (2) the various prior art approaches employed, (3) the types of problems encountered in the art, (4) the rapidity with which inventions are made, (5) the sophistication of the technology involved, and (6) the educational background of those actively working in the field. Certain Aramid Fiber, Inv. No. 337-TA-194, Commission Opinion On Violation, Remedy, Public Interest, and Bonding at 6, 7 (Nov. 25, 1985).

While inventor McGrath has a Ph.D. degree, inventor McKenzie had no college degree (FF 46, 115). Complainant's expert Smook has a Ph.D. degree (FF 361) but has never run any tests on, and does not consider himself an expert in, retroreflective sheeting (FF 393, 394). Approaches to retroreflective sheeting, viz. exposed lens type sheeting, enclosed lens sheeting, and encapsulated lens type sheeting have involved a number of years with problems occuring in the commercial form of those sheetings. Moreover the technology of those sheetings vary (FF 9, 12, 100, 101, 103). The administrative law judge finds that the record establishes a man of ordinary skill in the art would have a college degree in chemistry or have been recognized as having the equivalent of a college degree, and have worked several years in the chemical area and also have a practical understanding of retroreflective sheeting either through working with retroreflective sheeting or from reading the literature.

(d) The Claimed Invention is Not Obvious to One Skilled in the Art

In determining whether the claimed invention in issue is obvious to the hypothetical person of ordinary skill, the administrative law judge looks first to the nature of the problem confronting the inventor of the '159

patent. Orthopedic Equipment Co. v. United States, 702 F.2d 1004, 1009, 217 U.S.P.Q. 193, 196 (Fed. Cir. 1983). If a cited reference is not within the field of an inventor's endeavor, one looks at whether the field of the reference is reasonably pertinent to the problem the inventor was trying to solve. Union Carbide Corp. v. American Can Co., 724 F.2d 1567, 1572, 200 U.S.P.Q. 584, 588 (Fed. Cir. 1984).

The administrative law judge finds uncontroverted that the problem confronting the inventor of the '159 patent was the obtaining of lasting bonds between the cover film and base sheet of the McKenzie '178 encapsulated retroreflective sheeting (FF 12, 48). However the administrative law judge finds nothing in the McKenzie '178 patent that would suggest to the hypothetical person of ordinary skill that the '178 patent should be combined with something else to obtain lasting bonds between the cover film and base sheet of the McKenzie '178 encapsulated lens type retroreflective sheeting. To the contrary, while respondents argue that respondents' expert Smook did not testify that McKenzie alone does not teach the claimed invention in issue (RPF 501), Smook did testify that the '178 patent did not disclose a recognition of the existence of a delamination problem when it issued on June 22, 1965 (FF 137). Even if someone learned of the McKenzie delamination problem in the field, the administrative law judge finds nothing in the McKenzie '178 patent to suggest a solution to the problem.

Respondents have relied upon the Lemelson, Frigstad, Hendricks, Palmquist or Schwab patents in combination with the McKenzie '178 patent. The administrative law judge finds nothing in those references that suggest that cover films and binder materials useful for preparation of encapsulated lens retroreflective sheeting having increased bond strength to the cover sheet and

base sheet can be selected by the razor blade test reported in Example 1 of the '159 patent. He also finds nothing in those references which would predict the improvement in the adhesion between the binder layer and cover sheet of the McKenzie '178 retroreflective sheeting when a curable binder material so selected and thermoformed into contact with a dissimilar cover sheet is cured in situ to a relative insoluble and infusible material as taught in the '159 patent. While Lemelson discloses that cross linking of polymeric material increases bond strength and cohesive strength (internal strength) of the polymeric material, such increase of cohesive strength differs from the '159 invention because the '159 invention does not use merely a monolithic polymeric material (FF 143). As respondents acknowledge, a purpose of the radiation treatment according to Lemelson is to cause a predetermined degree of cross-linking which may improve the bond between polyethylene sheet members 54 and polyethylene sheet member 56 (RPF 265). Respondents argue that the Lemelson patent is not limited to polyethylene in that the patent states that the "end effect may be such as to convert, for example, a thermoplastic polymer such as polyethylene ... to a cross linked material" (RPF 504). The administrative law judge finds nothing in the Lemelson patent which would suggest that selective combination of a noncrosslinked polymeric cover film and crosslinked dissimilar polymeric binder which combination had been thermoformed prior to any crosslinking on curing in situ would cause increased bond strength between the cover sheet and binder material (FF 143, 144, 145). Frigstad is like Lemelson in that there are common reactive ingredients in each ply of a composite article which react together in a monolithic composite (FF 147). Moreover, while there is testimony that Frigstad involves laminating "two polymeric sheets of material", that Frigstad achieves greater

interply peel strength by combining two or more layers of plastic material under pressure and subsequently curing them under heat and pressure (RPF 259, 260), and that the bonding strength is the same whether the bonding pattern is either in narrow, intersecting lines or a solid 100 percent surface-to-surface constant (RPF 502), there is unrefuted testimony that the polymeric materials disclosed in the Frigstad '730 patent would be too brittle for use as binder layer in retroreflective sheeting which is necessarily flexible, that Frigstad's epoxy resins would lack adequate durability in the thin layer of the reflective sheeting and that the curing conditions for Frigstad's resins are too hot and too long to provide encapsulated lens retroreflective structures disclosed by the '178 patent (FF 148).

While the binder coating in the Palmquist '800 patent is heated to fully cure the binder coating that holds the spheres in position, it is found that neither the Palmquist '800 nor '680 patent has a cover film in spaced relation from a bead binder layer or a network of narrow intersecting bonds (FF 157). Moreover there is unrefuted testimony that the particular binder material used in the '800 patent will act as a release coating with respect to acrylate based materials and hence its use as a binder material in the McKenzie '178 product would be expected to result in low adhesion (FF 156). There is also unrefuted testimony that the "Desmophen" ingredients referred to in the Schwab '435 patent at column 5, lines 30-45, form polyurethanes which do not develop good adhesion to acrylic based sheetings such as the polymethylmethacrylate top film used in the '159 patent; that acrylic based layers have been used as release layers in casting films of said polyurethanes; that said polyurethanes used by Schwab are based on aromatic isocyanates and the exposure of said polyurethanes to sunlight through the

transparent cover sheet of an encapsulated lens sheeting would cause the polyurethanes to become yellow and would discolor the sheeting; that the polyurethanes described in column 5, lines 30-45 of the Schwab patent are very soft materials and become very fluid upon elevation of temperature and that this fluidity is undoubtedly desired by Schwab to allow the adhesive film to flow away from the backs of the beads as disclosed in column 6, lines 5-12 of Schwab but would be unsuitable for the manufacture of the sheeting of the '159 patent where there must be only a controlled thermoforming of binder material into a network of shaped retained narrow width bonds; and that Schwab's polyurethane adhesive film would be incapable of forming a self-supporting network of narrow intersecting bonds to a cover film (FF 161).

While respondents' argue that following the application of heat and pressure to embed the spheres in the Palmquist '680 patent, the enclosed lens retroreflective sheeting was subjected to a final curing step (RPF 201), the respondents admit, and the McKenzie '178 patent teaches, that the distinction between the enclosed lens retroreflective sheeting as disclosed not only in the Palmquist '680 but also the Palmquist '800 patents on the one hand and the encapsulated lens retroreflective sheeting on the other hand is that the brilliancy or intensity of reflection in the enclosed lens type sheeting is reduced by the transparent polymeric material which covers the microspheres and absorbs or dissipates a portion of the incident light (RPF 12; FF 106). Moreover the purposes of curing any bead bond layer in the enclosed lens sheeting sold by complainant prior to 1974 and before the Feb. 17, 1976 filing of the '159 patent (10) was to hold the bead in the pocket (which did not mean that the sheeting would not delaminate) and for weatherability (FF 122). There is unrefuted testimony that in the enclosed lens sheeting curing the various layers was not the primary or even the secondary reason for obtaining adhesion between those layers; that the reason the layers were cured was to

provide for a stabilized film product that would retain its dimensional stability through weathering, i.e. the optics are such that the dimensional stability of the resinous materials obtained in the particular construction had to remain in effect throughout the functional life of the sheeting; that in the manufacture of the enclosed lens sheeting which complainant was doing at least in 1973, the positioning of the metal with respect to the beads that reflect the light is very critical; that any curing was to maintain the critical spacing in the optical system; and that there was never a thought behind curing as it relates to interply adhesion or surface to surface adhesion within a construction (FF 205, 206, 207). The record further shows that while there is testimony that enclosed lens sheeting is interchangeable with "engineer grade sheet" (FF 121), the sale of engineer grade sheeting has decreased with the availability of the higher priced high intensity encapsulated retroreflective sheeting (FF 221). Moreover the development and exploitation of the '178 patent's use of the thermoplastic binder and cover sheet in encapsulated lens sheeting subsequent to the <u>less</u> brillant enclosed lens sheeting with thermoset binder/cover layer teaches away from the use in the '159 patent of a cured binder with an uncured cover film.

Respondents argue that Hendricks discloses that electron beam irradiation of adhesive composition may do more than improve internal strength properties, which was an already known effect of such treatment, in that rubber-resin type, pressure-sensitive adhesive tapes are by the electron beam irradiation firmed up and increased in internal strength, i.e., cohesiveness, but unexpectedly are at the same time not deteriorated in other properties such as adhesiveness, wet grab and tack and that those latter properties are in some cases greatly improved (RPF 240).

The Hendricks '904 patent does describe electron beam crosslinking of a pressure sensitive adhesive to increase "cohesion" of the adhesive without

decreasing its "adhesion. However the administrative law judge finds that the record establishes that pressure sensitive adhesives have nothing to do with the cured binder materials of the '159 patent in that pressure sensitive adhesives are typically removeable from a surface as shown at column 1, lines 63-69 of the '904 patent while the binder material of the '159 patent is intended to provide a permanent bond. Moreover the pressure sensitive adhesive of the '904 patent debonds from an adherent rapidly at 120 degrees F as shown at column 4, lines 56-61 of the '904 patent and such debonding would be intolerable for the '159 invention which seeks to provide a product having a ten-year life capable of long exposures at 120 degrees F. In addition there is no thermoforming in the '904 patent followed by crosslinking, and in fact, the '904 patent crosslinking is performed before the material is used as an adhesive (FF 165).

An enclosed lens retroreflective sheeting is disclosed in Eagon et al U.S. Patent No. 4,023,889 (the '889 patent). In the prosecution of the Miyata '854 patent which is assigned to one of the respondents and relates to the accused sheeting (FF 514), the Examiner rejected claims on the McGrath '159 patent in view of enclosed lens retroreflective sheeting of the '889 patent and an exposed lens retroreflective sheeting of a Holmen '227 patent. While arguing that the structures of the Eagon and Holmen patents do not suggest a double binder layer, it was also argued that the enclosed lens sheeting structure of Eagon and the exposed lens sheeting structure of Holmen are entirely different from the basic construction of the capsule type reflex-reflecting sheeting in the Miyata sheeting and in the '159 patent and that the Eagon and Holmen patents on the one hand and the '159 patent on the other were not from "analogous" arts. (FF 527).

When prior art references require selective combination to render obvious a subsequent invention, there must be some reason in the prior art reference

for the combination other than the hindsight gleamed from the invention in issue. ACS Hospital Systems, Inc. v. Monefiore Hospital, 732 F.2d at 1577, n. 14, 221 U.S.P.Q. at 933, n. 14. There also must be "something in the prior art as a whole to suggest the desirability, and the obviousness, of making the combinations". Lindermann Maschinenfabrik GmbH v. American Hoist and Devrick Co., 730 F.2d 1452, 1462, 221 U.S.P.Q. 481, 488 (Fed. Cir. 1984). Other than through the hindsight gleaned from the '159 patent, the administrative law judge can find nothing in the prior art relied on that discloses that the problem of the cover sheet separating from the thermoformed binder of the '178 McKenzie encapsulated lens retroreflective sheeting can be solved when a selected thermoformed binder is cured in situ to a relatively insoluble and infusible state.

Based on the foregoing the administrative law judge finds that respondents have not sustained their burden in establishing that the claims in issue are obvious to the hypothetical person of ordinary skill in the art.

(e) Objective Evidence of Nonobviousness (Secondary Factors)

The administrative law judge finds that there is objective evidence of commercial success, the failures of others to solve the McKenzie delamination problem and the early analysis of complainant's product by respondents which further supports the nonobvious nature of the claimed invention in issue. Thus there is evidence that since the original manufacture of the McKenzie '178 encapsulated lens retroreflective sheeting in the sixties, there has been concern about the seal strength between the cover film and the underlying binder material and there have been efforts made to solve the seal type problem of the McKenzie sheeting (FF 168 to 172, 180, 181 209, 210, 212 to

215) although the problem of inadequate adhesion did not come to the fore at complainant until approximately 1973 or 1974 (FF 173). Moreover because complainant had predicted a longer life for the McKenzie '178 sheeting, complainant has had to replace the sheeting. Complainant's costs for sign replacement have now totaled over In addition complainant has had to supply, at no charge, over square feet of replacement sheeting for the defective McKenzie '178 product (FF 211, 216). The delamination problem of the '178 McKenzie sheeting was an embarrassment to complainant (FF 216). The '159 invention solved the field delamination problem of the McKenzie high intensity product. Since its introduction in 1980 sales of complainant's high intensity retroreflective sheeting of the McGrath type have grown substantially (FF 204). The growth was accompanied by a 1981 analysis of the "new 3M product" by respondents which showed respondents that the adhesion binder to cover film is strong and to compete with the 3M product said adhesion must be achieved by crosslinking (FF 530).[16/] Complainant's growth has continued even though engineer grade enclosed lens retroreflective sheeting developed over forty years ago (FF 155, 156) is much lower in cost (FF 219).

(f) The Claims In Issue Are Not Invalid

Based on the foregoing the administrative law judge finds that the totality of the evidence establishes that respondents have not sustained their burden in establishing that the claimed invention in issue is invalid under 35 U.S.C. §103.

16/ The encapsulated 3M product according to the '159 patent was introduced to a market in 1980 (FF 79).

4. 35 U.S.C. {112

Respondents argue that the '159 patent fails to comply with the first and second paragraphs of 35 U.S.C. {112 (R Post at 32, 33).

(a) Independent Claim 1 Is Not A Means-Plus-Function Claim

A threshold question in considering respondents' arguments under 35 U.S.C.{112 is whether independent claim 1 is a means-plus-function claim in accordance with the sixth paragraph of 35 U.S.C. {112, because it contains the "increased adhesion" functional language. Respondents argued that if independent claim 1 is to be interpreted so as to avoid invalidity under {112, the "increased adhesion" functional clause should be interpreted as a means-plus-function clause, and claim 1 a means-plus-function claim, in accordance with the sixth paragraph of 35 U.S.C. {112 [17/] and the "applicable law" (R Post at 26) (R Pre at 35).[18/] While the staff argued that the '159 patent is valid under 35 U.S.C. {112 (S Post at 29 to 32, 45) it also argued that authorities support interpreting the "increased adhesion" clause of independent claim 1 as a means-plus-function clause and that claim 1 "may be interpreted as 'means-plus-function' claim" (S Post R at 4, 5) but that if claim 1 is interpreted to cover any polymeric system as a binder material, the '159 disclosure would not support such a broad interpretation "because it would not enable anybody as to how to make any polymer system

---

17/ The sixth paragraph of 35 U.S.C. {112 reads:

> An element in a claim for a combination may be expressed as a means or step for performing a specified function without the recital of structure, material, or acts in support thereof, and such claim shall be construed to cover the corresponding structure, material, or acts described in the specification and equivalents thereof.

18/ Claim 1 also uses the functional language "increased bond strength" (FF 11).

for binder material" (Tr. at 2114).

Complainant argued that independent claim 1 is not a combination means plus function claim because the claimed clause--

> characterized in that the binder material is selected from materials that show increased adhesion to said at least one of the cover sheet and base sheet when a solid layer of the material that has been previously laminated to said sheet is cured--

is not a function of the binder material but is merely a description of one characteristic of the binder material and a limitation on the binder material; that claim 1 defines other characteristics and limitations on the binder material, viz. it is thermoformed at the point of contact between the bonds and the cover sheet, it adheres the cover sheet and base sheet together, it hermetically seals cells in which the retroreflective elements are contained and it is cured in situ after being thermoformed (C Post R at 21).

Respondents and the staff rely on In re Fuetterer, 319 F.2d 259, 138 U.S.P.Q. 217 (CCPA 1963), as authority for interpreting the clause "increased adhesion" as a means-plus-function clause in accordance with the sixth paragraph of 112 (R Post at 26, S Post R at 4). However as Judge Rich stated in In re Hyatt, 708 F.2d 712, 715, 218 U.S.P.Q. 195, 197 (Fed. Cir. 1983), some twenty years after In re Fuetterer stated, the sixth paragraph of 35 U.S.C 112 (which in 1963 was then the third paragraph of 35 U.S.C. 112):

> ... saves combination claims drafted using means-plus-function format from this problem [rejection under the first paragraph of 112 because a claim is of such breadth that it reads on subject matter as to which the specification is not "enabling"] by providing a construction of that format narrow enough to avoid the problem of undue breadth as forbidden by the first

> paragraph. But no provision saves a claim drafted in means-plus-function format which is not drawn to a combination, i.e., single means claim.

In Hyatt the Court determined that the sixth paragraph of 35 U.S.C. §112 was inapplicable to a single means-plus-function claim because it was not a combination means-plus-function claim, and hence that the single means claim could be properly rejected for undue breadth under the first paragraph of §112. As the Court said in In re Hyatt, Id., the sixth paragraph of §112 saves a combination means-plus-function claim from a rejection for undue breadth under the first paragraph of 35 U.S.C. §112 due to the language used in the sixth paragraph of §112. Respondents agree that the combination means-plus-function format authorized by the sixth paragraph of 35 U.S.C. §112 saves combination means-plus-function claims "from the problem of §112 - first paragraph invalidity" (R Post R at 7).

The administrative law judge finds no support in the statute or its legislative history for the argument of respondents and the staff which supposes that one may determine whether a claim is or is not a combination means-plus-function claim under the sixth paragraph of §112 by first looking ahead to see which determination will sustain the claim's validity under §112. It is not a party's interpretation of a claim, which can vary from one party to another party, that governs whether a claim is a combination means-plus-function claim in accordance with the sixth paragraph of §112. Rather as the sixth paragraph of §112 states, it is a means-plus-function claim when an element in a claim for a combination is expressed as a "means" or "step" for performing a specified function in the combination without the recital of structure, material, or acts in support thereof. Independent claim 1 is not "without the recital of structure, material, or acts in support

thereof." The claim requires a certain thermoformed binder network configuration which is curable and cured in situ with adherence of the cover sheet and base sheet together. The claim further specifies a characteristic of the binder layer in that it can be selected by a razor blade test using a cured solid layer of binder and cover sheet (FF 11).

In In re Fuetterer, supra Judge Rich writing for the majority of the Court, and relying on the last paragraph of §112 did hold that functional language in a claim is not expressly condemned by the patent statute. Nevertheless the Court did not find that a combination claim that employs functional language is to be interpreted as a combination means-plus-function claim in accordance with the last paragraph of §112. This is evident from the following language of Fuetterer:

> It is clear that the instant claims [at issue in Fuetterer] do not comprehend a class of inorganic salts of any greater breadth than is comprehended by the invention description. It is equally clear from this description and appellant's brief that, in the words of the second paragraph of section 112, "applicant regards as his invention" the combination with his other tread ingredients of any inorganic salt capable of "maintaining the carbohydrate, the protein, or mixture thereof, in colloidal suspension ...." It is exactly this combination which appellant has particularly pointed out and distinctly claimed in compliance with the second paragraph of section 112. If, therefore, as the examiner alleges, many an "inorganic salt ... would not be operative for appellant's purpose," this criticism bears only on the sufficiency of the invention description. But its adequacy under the first paragraph of section 112 has not been questioned. (Emphasis added) [footnote omitted]

319 F.2d at 262, 138 U.S.P.Q. at 223. Accepting the argument of respondents and the staff that the combination claims containing functional language in Fuetterer were combination means-plus-function claims in accordance with the last paragraph of §112, then the Examiner in Fuetterer could not have

questioned the claim's adequacy, under the first paragraph of §112, as the Court stated could have been done. Consequently, the claims at issue in Fuetterer plainly were not combination means-plus-function claims. Moreover even after Fuetterer the same Court interpreted the patent statute as allowing a rejection of a claim directed to a combination of chemical substances, though using functional language but not in the means-plus-function format, for undue breadth under the first paragraph of 35 U.S.C. §112. See, In re Swinehart, 439 F.2d 210, 212, 169 U.S.P.Q. 226, 229 (CCPA 1970) (functional language used in a claim to a combination of chemical compounds "transparent to infra-red rays and resistant to thermal shock" and the Court sensed no concern by the Patent Office that appellants were claiming more than they were entitled to claim under the first paragraph of section 112); In re Halleck, 422 F.2d 911, 164 U.S.P.Q. 647, 649 (CCPA 1970) (functional language used in a claim to a combination of an animal feed and a peristalsis-regulating substance and while the Patent Office rejected the claim as functional to the point of novelty and the Court considered it a rejection under the first paragraph of 35 U.S.C. §112, it reversed the rejection). Assuming the correctness of the argument of respondents and the staff that the mere presence of functional language in a claim to a combination of substances makes that claim a combination means-plus-function claim under the sixth paragraph of §112 then under Hyatt, the Court's reference to the first paragraph of section 112 in Swinehart and Halleck would have been prohibited. The administrative law judge finds that the functional language in independent claim 1 in issue does not make that claim a combination means-plus-function claim in accordance with the sixth paragraph of §112 and accordingly the claim can be subjected to a rejection for undue breadth (insufficient disclosure) under the enabling requirement of the first paragraph of §112.

(b) Section 112, Second Paragraph

Respondents argue that independent claim 1 in issue attempts to distinguish over the McKenzie '178 patent solely by its tendency to remedy the "delamination" or inadequate adhesion problem suffered by the McKenzie sheeting, i.e, by stating that the binder material is selected from materials that show "increased adhesion" and give rise to "increased bond strength" when cured (R Post at 30). Accordingly it is argued, citing General Electric Co. v. Wabash, 304 U.S. 364, 371-372, 37 U.S.P.Q. 466 (1938), that claim 1 is invalid because "a characteristic essential to novelty may not be distinguished from the old art solely by its tendency to remedy the problems in the art met by the patent," and citing Application of Fuetterer, supra, that "claims directed merely to a 'desired result' have long been considered objectionable primarily because they cover any means which anyone may ever discover of producing the result" (R Post at 32, 33). Respondents also argue that the claimed so-called "razor blade test" limitation, "which rendered the claims in issue allowable fails to comply with the claiming requirements of the second paragraph of section §112" (R Post R at 6). Such arguments stem from the first paragraph of 35 U.S.C. §112 and not the second paragraph of 35 U.S.C. §112. See, In re Swinehart, 439 F.2d at 212, 169 U.S.P.Q. at 229 (rejection based on General Electric Co. v. Wabash, supra, stems from the requirements of the first paragraph of 35 U.S.C. 112); In re Borkowski 442 F.2d 904, 908, 164 U.S.P.Q. 642, 645, 646 (CCPA 1970) (a claim which is of such breadth that it reads on subject matter as to which the specification is not "enabling" should be rejected under the first paragraph of §112); In re Wakefield, 422 F.2d 897,903-04, 164 U.S.P.Q. 636, 641 (CCPA 1970) (proper

statutory basis for an undue breadth rejection is the first paragraph of §112); In re Fisher, 427 F.2d 833, 166 U.S.P.Q. 18 (CCPA 1970) (the Court reversed the Patent Office's affirmance of the rejection under the second paragraph of §112 that claims were so broad as to be indefinite but affirmed the rejection of the claims based on an insufficient disclosure under the first paragraph of §112); In re Halleck, 422 F.2d at 914, 164 U.S.P.Q. at 649 (Patent Office rejection of claims as "too broad and ... functional at the exact point of novelty "should be under the first paragraph of §112, not the second paragraph of §112); Certain Limited-Charge Cell Culture Microcarriers, Inv. No. 337-TA-129, 221 U.S.P.Q. 1165, 1171 (1983) (the Commission, in reversing a finding of the administrative law judge that the claims were indefinite under the second paragraph of §112 because of an insufficient disclosure, did not feel that a question of definiteness was involved and stated that the dispute was whether "as a practical matter," members of the public may have difficulty determining whether or not they infringe the claims in issue).

Complainant argues that it is apparent, from reading independent claim 1 as a whole rather than just considering elements of the claims, that the claims in issue distinguish from the McKenzie '178 patent in ways other than "increased adhesion" and "increased bond strength." For example, it is argued that claim 1 requires a curable binder material which is thermoformed into a network of narrow intersecting bonds that form hermetically sealed pockets containing retroreflective elements, which bonds are cured in situ after thermoforming and that such teaching is not found in the '178 patent (C Post at 22).

The second paragraph of 25 U.S.C. §112 reads:

> The specification shall conclude with one or more claims particularly pointing out and distinctly claiming the subject matter which the applicant regards as his invention.

As this administrative law judge stated in an unreviewed initial determination dated October 12, 1984 at 38, 39 in Certain Spherical Roller Bearings, Inv. No. 337-TA-179, aff'd, SKF Industries v. U.S. International Trade Commission (Fed. Cir. unpublished opinion Sept. 30, 1985).

> The primary importance of the second paragraph of 35 U.S.C. §112 is its absolute requirement that the claims must particularly point out and distinctly claim the subject matter which the inventor regards as his invention. The second paragraph pertains only to claims. In re Borkowski, 422 F.2d 904, 909, 164 U.S.P.Q. 642, 645 (C.C.P.A. 19780); In re Hammack, 427 F.2d 1378, 1266 U.S.P.Q. 204 (C.C.P.A. 1970). In Borkowski, Judge Rich stated that the first sentence of the second paragraph of §112 is essentially a requirement for precision and definiteness of claim language; that if the scope of subject matter embraced by a claim is clear, and if the applicant has not indicated that he intends the claim to be of a different scope, then the claim does particularly point out and distinctly claim the subject matter which the applicant regards as his invention. Judge Rich also pointed out that if the "enabling" disclosure of a specification is not commensurate in scope with the claimed subject matter, that fact does not render the claim imprecise or indefinite, or otherwise not in compliance with the second paragraph of §112; rather, the claim is said to be based on an insufficient disclosure under the first paragraph of 35 U.S.C. §112.

As has been found by the administrative law judge in the sections IA.2 and 3 supra involving validity under 35 U.S.C. §§102(b) and 103, the claims in issue when read in light of the disclosure of the '159 patent and the '159 file wrapper are directed to an encapsulated lens retroreflective sheeting which requires a curable binder material that is thermoformed into a network of narrow intersecting bonds which form hermetically sealed pockets containing retroreflective elements. Moreover the network of narrow intersecting bonds are cured in situ after thermoforming such that there are chemical reactions

of constituent ingredients which result in relative insolubility and infusibility of the cured material. In addition, the binder material has to be selected from materials that show increased adhesion to the cover sheet when a solid layer of the binder material that has been previously laminated to said sheet is cured. When all of those conditions are met, the cured binder has increased bond strength to the cover sheet and binder material in comparison to said strength in the prior art McKenzie '178 encapsulated lens sheeting.

The administrative law judge finds that the scope of the subject matter embraced by the claims in issue is clear. The administrative law judge does not find any indication in the '159 patent specification or '159 file wrapper that inventor McGrath intended the claims to be of a different scope. See, In re Swinehart, 439 F.2d at 213, 169 U.S.P.Q. at 230 (the Court in reversing a Patent Office rejection holding that disputed claim language did not define the subject matter for which protection was sought with the distinctiveness and particularity which are required by the second paragraph of §112, stated that appellant's disclosure did not suggest that only certain degrees of transparency to infrared radiation are comprehended within the teaching there given); Certain Limited-Charge Cell Culture Microcarriers, 221 U.S.P.Q. at 1171 (the Commission in reversing the finding that certain claims were indefinite under the second paragraph of §112, stated that if the scope of the subject matter embraced by a claim is clear, and if the patentee has not otherwise indicated that he intends the claim to be of a different scope, then a claim is definite under the second paragraph of §112).

Based on the foregoing the administrative law judge finds that respondents have not sustained their burden in establishing that the claims in

issue do not particularly point out and distinctly claim the subject matter which inventor McGrath regarded as his invention.

(c) Section 112, First Paragraph

In addition to respondents' arguments that the claims in issue are functional to the exact point of novelty and that the '159 disclosure is insufficient as to the razor blade test, respondents argue that the '159 specification does not enable one skilled in the art to make respondents' sheeting and that even one of "extraordinary" skill in the art (i.e., complainant's Grunzinger) who is thoroughly familiar with the '159 patent, cannot duplicate respondents' sheeting; that the chemical reactions involved are unpredictable; and that there are no teachings in the '159 patent to assist one skilled in the art to determine the effects "on bond strength of the various factors involved in the manufacture of respondents' sheeting" (R Post R at 2, 4).

Complainant maintains that respondents have not sustained their burden relating to enablement. It argues that the '159 patent gives fourteen specific examples teaching one skilled in the art how to practice the claimed invention; that in addition, the '159 patent sets forth a screening test by which one skilled in the art can select additional binder materials and cover sheets; that respondents' Sharpe admitted that a chemist would know what the '159 invention is about and that the '159 invention is very definitely an improvement on the prior art; and that Erickson, complainant's Technical Director, testified that today one of skilled in the art of retroreflective sheeting could reproduce the examples in McGrath (C Post at 21).

The staff agrees with complainant that the '159 patent complies with paragraph 1 of section 35 U.S.C. §112, if the claims are construed as the

staff urges, i.e., based inter alia on the examples set forth in the specification and the requirement that a razor blade test be conducted as a screening test for the selection of binder material. However the staff argued that if the "claims are interpreted to cover any polymeric system, as a binder material, the disclosure would not support such a broad interpretation because it would not enable anybody as to how to make any polymer system for binder material" (Tr. at 2114).

The pertinent portion of the first paragraph of section 112 reads:

> The specification shall contain a written description of the invention, and of the manner and process of making and using it, in such full, clear, concise, and exact terms as to enable any person skilled in the art to which it pertains, or with which it is most nearly connected, to make and use the same....

Enablement is a legal issue which involves subsidiary questions of fact or of law. The basic question is whether the disclosure is sufficient to enable those skilled in the art to practice the invention as it is claimed. Lindermann Maschinenfabrick GMBH v. American Hoist & Derrick, 730 F.2d at 1463, 221 U.S.P.Q. at 489 (Fed. Cir. 1984); Quaker City Gear Works, Inc. v. Skil Corp. 747 F.2d 1446, 1453-56, 223 U.S.P.Q. 1161, 1166 (Fed. Cir. 1984).

In Borkowski, 422 F.2d at 908, 164 U.S.P.Q. at 645, the Court in reversing the Patent Office's rejection of certain claims based on an insufficient disclosure noted that:

> ...as we have stated in a number of opinions, a specification need not contain a working example if the invention is otherwise disclosed in such a manner that one skilled in the art will be able to practice it without an undue amount of experimentation. Here, while it may be that an "exemplary correlation" of parameters such as times of reaction and rates of reactant feed and product removal would give the worker in the art some useful information and provide a "jumping off place," we see no basis for concluding that without such information the worker in the art would not be enabled by the specification to practice

the invention, i.e., to "balance" the several reactions involved in appellants' process.

In In re Fisher, 427 F.2d at 837-38, 166 U.S.P.Q. at 23, 24, the Court affirmed a rejection of a claim under the first paragraph of §112 because the specification was not as broad as the scope of the claim. The claim in issue was directed to an adrenocorticotrophic hormone preparation containing at least 1 International Unit of ACTH per milligram and being further characterized as containing, as the active component, a polypeptide of at least 24 amino acids having a specific sequence from the N terminus of the molecule. The Court in affirming the rejection stated:

> The issue thus presented is whether an inventor who is the first to achieve a potency of greater than 1.0 for certain types of compositions, which potency was long desired because of its beneficial effect on humans, should be allowed to dominate all such compositions having potencies greater than 1.0, including future compositions having potencies far in excess of those obtainable from his teachings plus ordinary skill.
>
> It is apparent that such an inventor should be allowed to dominate the future patentable inventions of others where those inventions were based in some way on his teachings. Such improvements, while unobvious from his teachings, are still within his contribution, since the improvement was made possible by his work. It is equally apparent, however, that he must not be permitted to achieve this dominance by claims which are insufficiently supported and hence not in compliance with the first paragraph of 35 U.S.C. 112. That paragraph requires that the scope of the claims must bear a reasonable correlation to the scope of enablement provided by the specification to persons of ordinary skill in the art. In cases involving predictable factors, such as mechanical or electrical elements, a single embodiment provides broad enablement in the sense that, once imagined, other embodiments can be made without difficulty and their performance characteristics predicted by resort to known scientific laws. In cases involving unpredictable factors, such as most chemical reactions and physiological activity, the scope of enablement obviously varies inversely with the degree of unpredictability of the factors involved. In the present case we must conclude, on the record before us, that appellant has not enabled the preparation of ACTHs having potencies much greater than 2.3

[the specification disclosed products having potencies from 1.11 to 2.30], and the claim recitations of potency of "at least 1" render the claims insufficiently supported under the first paragraph of 35 U.S.C. 112.

The last quoted paragraph supra of In re Fisher was considered in In re Bowen, 492 F.2d 859, 861-863, 181 U.S.P.Q. 48, 50-51 (CCPA 1974)[19/] with the following pertinent comments:

> To the extent that there may be a difference in the resolution of the question whether enablement is accomplished when the Patent Office has not shown the inability of one skilled in the art to use the invention as broadly as it is claimed and appellant has not shown that materials other than those he discloses will operate in the claimed process, we do not think it hinges on whether the case is denominated "chemical" or "mechanical." Compare In re Cook, 439 F.2d 730, ... (1971), with In re Marzocchi, 439 F.2d 220, ... (1971), the latter being a so-called "chemical case" where enablement was found to exist, and the former being a so-called "mechanical" case where the court held enablement not accomplished. As we said in Cook, 439 F.2d at 734, ... we would prefer to see the dichotomy which lawyers find in the chemical and mechanical cases "denominated a dichotomy between predictable and unpredictable factors in any art." However, we recognize that the realities of chemical cases often result in unpredictability. As we explained in In re Fisher, [substantive portion of last quoted portion of Fisher is duplicated above]
>
> * * *
>
> It is clear from the decision of the board that the unpredictability which it noted was in the admittedly chemical fact that the "properties of 'polmerizable materials' can vary over a wide range," but no reasons were given to appellant by the Patent Office for the alleged failure--or at least uncertainty-- of the class of "polymerizable materials" to work in the claimed process to controvert the statement in appellant's application that his invention, in its broader aspects, is applicable to

---

19/ In Bowen, Judge Rich writing for the Court reversed a Patent Office rejection of claims to a polymerization process under the enablement first paragraph of 35 U.S.C. §112.

other polymers. See In re Nguyen Dinh-Nguyen, 181 USPQ 46 .... It is clear that even in cases involving the unpredictable world of chemistry such reasons are required. As we stated in In re Marzocchi, ... 439 F.2d at 223-24, 169 USPQ at 369-70:

> As a matter of Patent Office practice, then, a specification disclosure which contains a teaching of the manner and process of making and using the invention in terms which correspond in scope to those used in describing and defining the subject matter sought to be patented must be taken as in compliance with the enabling requirement of the first paragraph of (112 unless there is reason to doubt the objective truth of the statements contained therein which must be relied on for enabling support. Assuming that sufficient reason for such doubt does exist, a rejection for failure to teach how to make and/or use will be proper on that basis; such a rejection can be overcome by suitable proofs indicating that the teaching contained in the specification is truly enabling.
>
> In the field of chemistry generally, there may be times when the well-known unpredictability of chemical reactions will alone be enough to create a reasonable doubt as to the accuracy of a particular broad statement put forward as enabling support for a claim. This will especially be the case where the statement is, on its face, contrary to generally accepted scientific principles. Most often, additional factors, such as the teachings in pertinent references, will be available to substantiate any doubts that the asserted scope of objective enablement is in fact commensurate with the scope of protection sought and to support any demands based thereon for proof. In any event, it is incumbent upon the Patent Office, whenever a rejection on this basis is made, to explain why it doubts the truth or accuracy of any statement in a supporting disclosure and to back up assertions of its own with acceptable evidence or reasoning which is inconsistent with the contested statement. Otherwise, there would be no need for the applicant to go to the trouble and expense of supporting his presumptively accurate disclosure.

Here the only reason given appellant why his specification does not enable one skilled in the art to use his invention

> as broadly as it is claimed is the statement of the board that "polymerizable materials" include "Not only * * * all of the very many organic polymers * * * but also inorganic polymers." But even this statement only identifies a subgenus of "polymerizable materials" without giving a reason for the implication inherent therein that inorganic polymers would not work in appellant's process.

In Fuetterer, 319 F.2d at 265, 138 U.S.P.Q. at 223, in reversing a Patent Office rejection of a claim on undue breath, Judge Rich speaking for a majority of the Court stated:

> We find the arguments of the board and the examiner relating to experimentation necessary to determine the suitability of undisclosed salts to operate in appellant's claimed combination beside the point. Appellant's invention is the combination claimed and not the discovery that certain inorganic salts have colloid suspending properties. We see nothing in patent law which requires appellant to discover which of all those salts have such properties and which will function properly in his combination. The invention description clearly indicates that any inorganic salt which has such properties is usable in his combination. If others in the future discover what inorganic salts additional to those enumerated do have such properties, it is clear appellant will have no control over them per se, and equally clear his claims should not be so restricted that they can be avoided merely by using some inorganic salt not named by appellant in his disclosure. The only "undue burden" which is apparent to us in the instant case is that which the Patent Office has attempted to place on the appellant. The Patent Office would require him to do research on the "literally thousands" of inorganic salts and determine which of these are suitable for incorporation into his claimed combination, apparently forgetting that he has not invented, and is not claiming colloid suspending agents but tire tread stock composed of a combination of rubber and other ingredients.

In Certain Limited-Charge Cell Culture Microcarriers 221 U.S.P.Q. at 1173, 1174, the Commission in reversing a finding under the enablement requirement of the first paragraph of §112 held that "[e]xperimentation is not inconsistent with enablement, providing that it is not undue" and added that "the fact that experimentation may be complex, as testified to ... does not

necessarily make it undue, if the art typically engages in such experimentation."

Respondents' argument that the '159 specification "does not enable one skilled in the art to make respondents' sheeting" is without merit (R Post R at 2). An inventor should be allowed to dominate even the future patentable inventions of others where those inventions were based in some way on the inventor's teachings. Even though such future patentable inventions are unobvious from the inventor's teachings, the future patentable inventions still should be within the inventor's contribution if the future patentable inventions were made possible by the inventor's work. See, In re Fisher, supra. Moreover the patent statute does not require that a patentee describe in his specification every conceivable and possible future embodiment of his invention. The law recognizes that patent specifications are written for those skilled in the art, and requires only that the inventor describe the "best mode" known at the time to him of making and using the invention. As the Supreme Court said in Smith v. Snow, 294 U.S. 1, 24 U.S.P.Q. 26, 30 (1935):

> We may take it that, as the statute requires, the specifications just detailed show a way of using the inventor's method and that he conceived that particular way described was the best one. But he is not confined to that particular mode of use since the claims of the patent, not its specifications, measure the invention. Paper Bag Patent Case, 210 U.S. 405, 419; McCarty v. Lehigh Valley R. Co., 160 U.S. 110, 116; Winans v. Denmead, 15 How. 330, 343. While the claims of a patent may incorporate the specifications or drawings by reference, see Snow v. Lakeshore R. Co., 121 U.S. 617, 630 and thus limit the patent to the form described in the specification, it is not necessary to embrace in the claims or describe in the specifications all possible forms in which the claimed principle may be reduced to practice.

In Autogiro Co. of America v. United States, 384 F.2d 391, 398, 155 U.S.P.Q. 697, 703 (Ct. Cl. 1967) a predecessor court to the Federal Circuit

stated:

> The specification "set[s] forth the best mode contemplated by the inventor of carrying out his invention." 35 U.S.C. §112. This one embodiment of the invention does not restrict the claims. Claim interpretation must not make use of "best mode" terms inasmuch as the patentee need not guard against infringement by listing every possible infringing device in the specification. Adams v. United States, 165 Ct. Cl. 576, 330 F.2d 662, 141 U.S.P.Q. 361 (1964), aff'd 383 U.S. 39, 148 U.S.P.Q. 479 (1966) ... [citations omitted]

Hence the issue is not whether the '159 patent specification has to be one which enables one skilled in the art to make respondents' accused "Ultralite" that is alleged to infringe the '159 patent but rather whether there is reason to doubt the objective truth of the statements contained in the '159 specification which must be relied upon for enabling support to support the claimed invention. See, In re Marzocchi, supra.

The '159 specification teaches that increased bond strength to the cover sheet and base sheet of an encapsulated (cellular) retroreflective sheeting sheeting is obtained if the network of bonds from a binder that is selected by a razor blade test and which is initially thermoformed into sealing contact between the cover film and base sheet, is subsequently cured in situ, viz. occurrence of chemical reactions which result in relative insolubility and infusibility of the cured material. If if is established that there is reason to doubt the objective truth of this teaching then the claims are not valid under the enablement first paragraph of §112.

(i) Respondents' Tests As To Whether Curing In Situ Does or Does Not Account For Increased Bond Strength

It is the respondents' and the staff's position that tests conducted by respondents establish that the "curing of 'Ultralite' [thermoformed] binder material decreases adhesion" and "has a depressing effect on peel strength in

respondents' sheeting" and that it is a "solvent evaporation [that] does indeed account for an increase in peel strength" (R Post at 24, 25, Tr. at 2159, 2160, 2161, S Post at 21, 22, Tr. at 2114). It is argued that respondents' tests demonstrate that there is a "trend" in that "[o]nce the laminate is made then as the solvent leaves the material the peel strength gets stronger". If respondents' tests do demonstrate such a "trend" is applicable to respondents' "Ultralite," then, as respondents and the staff argue, the following teaching in the '159 specification is inaccurate: in encapsulated lens sheeting it is the curing in situ of a thermoformed polymeric binder material, selected by the razor blade test, to a relatively insoluble and infusible state that accounts for increased bond strength between binder and cover film.

Prior to the tests relied on by respondents, between the months of July through September 1987, respondents conducted preliminary tests to define various test conditions and in October 1987 the first planned test was started. Those tests, according to testimony of respondents' Kobayashi, did not succeed (FF 439). In January 1988 two new test conditions were added and new tests commenced. Respondents rely on the results of those January 1988 tests (FF 439).

As to what respondents did in the January 1988 tests, a series of compositions were prepared containing the following respective percentage

The administrative law judge finds several substantial flaws in respondents' tests.[23/] While respondents refer to the use of "binder one"

23/ Respondents include in RPF 486 the following to show the magnitude of change in peel strength of experimental samples:

(Footnote continued to page 85)

material in said tests, the record does not establish that binder one material of respondents' "Ultralite" was used in the tests. Thus what respondents in their tests have called a "thermoplastic" material is not the thermoformed binder one material of "Ultralite" (FF 490) because it lacks any isocyanate. Moreover the record does not show that the proportions of isocyanate to terpolymer used in what respondents in their tests termed "thermosetting" material are identical to the proportions used in preparation of respondents' binder one for their "Ultralite". In addition solvent contents of

used in respondents' tests are outside the solvent range of 3 to 5% in commercial "Ultralite" binder one material (RPF 485; FF 441) at the time it is thermoformed to the cover film. That these are serious flaws is evident from the following testimony of respondents' expert Smook:

> Q I would like to ask you what effect, if any, these factors have on the bond strength in a laminate such as the ultralite sheeting, for example, that is RPX-30 in front of you? <u>What is the effect on bond strength involved in varying the ingredients that you have described</u> such as the type of polymer, the type of crosslinking agent, the type of solvent?
>
> A <u>It has a dramatic effect</u>. Of course, the design of a system like this has been an empirical selection of materials because the complexity of these bonds are so great and it is so difficult to predict what is going to

---

(Footnote continued from page 84)

happen in a bond that the adjustment of composition is a very important aspect.

Q What about the ratio of the ingredients?

A I consider that almost simultaneously at the same time of considering the constituents, themselves.

Q What about the type and the amount of solvent that is used?

A This is particularly critical because the solvent must be selected to not only dissolve the binder, and provide an opportunity for all of the components of the binder to come together in a homogenous way, but it must also provide compatibility and wetting with the substrate on which the adhesive bond is to be made. (Emphasis added)
[(FF 461)] 24/

24/ Replying to complainant's criticism that "only one [of respondents' test results] had an initial solvent content within the range ... utilized in Seibu's commercial sheeting" respondents argued that they offered data over a broad range to show the existence of a "general trend" (R Post R at 19). It is not seen how such a trend is relevant when a change for example in the ratio of solvent in respondents' "Ultralite" binder one formulation can have a dramatic effect on the bond strength of the "Ultralite" sheeting.

Finally respondents' tests were designed to determine cohesive force (internal strength) (FF 439, 483) although as respondents' expert Smook testified in reading the entire '159 patent, the term "increased adhesion" in the '159 patent means something more than increased cohesive strength of the binder (FF 462).

The administrative law judge finds that respondents' tests do not demonstrate, contrary to the teachings of the '159 specification, that the curing of "Ultralite" binder one material "decreases adhesion" because respondents' test have not used the binder one material of "Ultralite" and as testified to by respondents' expert a variation of the ingredients and ratio of ingredients in respondents' binder one has a dramatic effect on the bond strength of "Ultralite". Moreover the tests make no attempt to show that in curing of a thermoformed polymeric system the adhesion is decreased as compared with the adhesion of the same uncured polymeric system. Also the tests make no attempt to show that the curing of respondents' thermoformed encapsulated lens sheeting has a depressing effect on the peel strength in

---

25/ The '159 specification teaches that in some embodiments of the invention, the cover film can be pulled away from the bonds intact before the bonds are cured, and in some cases be visibly free of bond material, while it cannot be pulled away in that manner after curing (FF 14). Hence destruction of such test samples by respondents leaves in doubt whether curing as defined in the '159 specification affects adhesion in their sheeting.

comparison with the peel strength for respondents' thermoformed but uncured sheeting.

Based on the foregoing the administrative law judge finds that the record does not establish that there is reason to doubt the objective truth of the teaching in the '159 specification that increased bond strength to the cover sheet and selected thermoformed binder base sheet of an encapsulated (cellular) retroreflective sheeting is due to the curing in situ, as curing is defined in the '159 patent specification.

The administrative law judge has considered separately the probative value of the evidence relating to respondents' tests, apart from complainant's motion to strike such evidence. However when that evidence is considered in view of the record, relative to said motion to strike (See Order No. 16 which issued on April 15, 1988), respondents' evidence related to their tests must be accorded little weight.

(ii) Razor Blade Test

Respondents argue, in effect, that the '159 specification is not enabling because one cannot determine from the specification what kind of razor blade test to use (R Post R at 4 to 6; RPF 459). Complainant argues that respondents and other members of the public can determine a proper binder material "selected from materials that show increased adhesion" by utilization of the razor blade test set forth in Example 1 of the '159 patent (C Post at 23, CPF 115). The staff argues that Example 1 of the '159 patent describes how to conduct a razor blade test and that a person of ordinary skill in the art would be able to determine, based on the teachings of the '159 patent, how to select a binder material and conduct a razor blade test (SPF G 2).

The issue is whether the last paragraph of Example 1 of the '159 patent is sufficient to enable those of ordinary skill in the art, not necessarily complainant's expert Grunzinger nor respondents' expert Sharpe, to select useful binder materials for the claimed encapsulated lens type retroreflective sheeting. In the last paragraph of Example 1, a .6 millimeter-thick test film of curable binder is prepared. Two sections are cut from the test film and each laminated (thermoformed) to a cast cover sheet. The binder of one of the sections was then cured after which the adhesion between the binder and cover sheet of each section was checked "by attempting to separate them with a single edged razor blade" (FF 20). As Example 1 of the '159 patent disclosed, the uncured film could be easily removed while the cured film was very tightly bound and could not be clearly separated from the cover sheet (FF 20). Video tapes CPX-70 and RPX-49 show that with a single edge razor blade uncured binder film can be more readily separated from a cover sheet than can be cured binder film.

The record does not show that McGrath was the first person to use a razor blade for testing the level of adhesion between two different layers and McGrath has so testified (FF 97). Thus while respondents argue that it was not until November 1987 that complainant's Erickson learned from inventor McGrath how the razor blade test was to be run, Erickson testified that he ran this specific test probably as far back as maybe 1973, 1974 on exposed lens retroreflective sheeting and that the test can be used to help discriminate and to screen candidate materials which is what the intent of the McGrath '159 test is (FF 244, 245). Complainant's Grunzinger had, prior to talking with McGrath on one of his visits back in the States, used the razor blade test to test the level of adhesion between two different layers using an X or V cut

(FF 641). Respondents' Sharpe agreed that whether one used a X or a V, one would get the same qualitaive results (FF 357). Moreover such qualitative tests, like the razor blade test in issue, have been conventionally used by others (FF 97, 571, 573, 574).

The razor blade test is a qualitative screening test for selecting appropriate binder material (FF 626). As the last paragraph of Example 1 of the '159 patent makes clear, its use is merely to determine the ease of separation of binder material and cover film before the binder material is cured as compared to the ease of separation of binder material and cover film after the binder material is cured. Respondents' Sharpe agreed that with the materials that McGrath has specified in his examples, and "assuming that the temperature was at room temperature," there will be a perception with these materials that it is more difficult to remove the '159 binder of Example 1 material from a cast sheet with the razor blade test before curing than after curing (FF 339). While the preparation of the test films sections, the location on the test film sections (edge or middle of the film) where the separation is attempted with the razor blade, the angle that the blade is manipulated to attempt the separation, the strength of the person manipulating the blade in attempting the separation and the sharpness of the blade used in the separation can affect the razor blade test in an absolute sense, the record supports a finding that such factors would not affect the test when the same person is consistent with the test conditions and manipulation of the razor before cure and after cure which is what the razor blade test is concerned with (FF 576, 577).

Based on the foregoing, the administrative law judge finds that respondents have not established that a person of ordinary skill in the art

would be unable to select appropriate binder material by the qualitative screening razor blade test disclosed in the last paragraph of Example 1 of the '159 patent.

(iii) Independent Claim 1 is not Invalid Because of Functional Language to the Exact Point of Novelty

In the Wabash case cited by respondents, the Supreme Court condemned the use of "conveniently functional language at the exact point of novelty." The "exact point of novelty" in the Wabash case resided in statements in the claims which "distinguished [the large grained tungsten filament there involved] from the old art solely by its tendency to remedy the problems in the art met by the patent." Aside from such statements, the Supreme Court specifically held that the claims "aptly ... describe the product of earlier manufacture."

In the '159 patent, McGrath does not claim merely a desired result which is durable encapsulated lens sheeting that resists delamination. Rather complainant's "exact point of novelty" is a new combination of substances constituting a particular structure of encapsulated type retroreflective sheeting comprising a selected thermoformed binder that has been subsequently cured in situ to a state of relative insolubility and infusibility. This novel combination is distinguable from the prior art McKenzie '178 encapsulated lens type sheeting not through a claimed desired result, but rather in stating that there is an encapsulated lens retroreflective sheeting wherein a selected binder, in sealing contact (thermoformed) with the cover sheet, is curable and is cured in situ to a relatively insoluble and infusible state such that a network of narrow intersecting bonds have increased bond strength to the cover film.

Based on the foregoing, respondents have not established that independent claim 1 is invalid because of any use of functional language to the exact point of novelty.

5. Enforceability of the '159 Patent

Respondents argue that complainant represented to the Patent Office that the '159 claims in issue were patentable because the bonds in appellant's retroreflective sheeting are prepared by combining thermoforming and curing operations that are conventionally considered as alternatives not used in combination and that combining the two operations could conventionally be considered superfluous and could be destructive of the bonds. It is argued that those and "similar" representations made by complainant to the Patent Office were untrue, in view of the withheld Lemelson '249 and Frigstad '730 patents which complainant had knowledge of. It is argued that the withheld Lemelson and Frigstad patents and complainant's pre-1974 vintage prior art sales were "material" in that "there is a substantial likelihood that a reasonable examiner would consider it important in deciding whether to allow the application to issue as a patent," and that the withholding of that prior art in the circumstances attending the prosecution of the '159 application was "gross negligence," at least, and inequitable conduct which renders the '159 patent unenforceable (R Post at 42, 43).

Complainant argues that complainant before the Patent Office, in referring to the two operations combined in forming bonds, was making reference to the sheet material as recited in claim 1 in issue and that neither the Lemelson nor Frigstad patents relates to retroreflective sheeting (C Post at 25, 26).

The staff argues that the '159 patent is enforceable because the evidence demonstrates that neither the Lemelson patent nor the Frigstad patent is material and that complainant's failure to cite those patents did not result from an intent to mislead the Patent Office (S Post at 32, 33).

Establishing that a patent was procured with such egregious conduct as to render it unenforceable requires clear, unequivocal, and convincing evidence of an intentional misrepresentation or withholding of a material fact from the Patent Office. Orthopedic Equipment Co. v. All Orthopedic Appliances, Inc. 707 F.2d at 1383, 217 U.S.P.Q. at 1286; Square Liner 360, Inc. v. Chisum, 691 F.2d 362, 374, 216 U.S.P.Q. 666, 674-75 (8th Cir. 1982). In American Hoist & Derrick v. Sowa & Sons, Inc., 725 F.2d at 1362, 220 U.S.P.Q. at 772, 773, the Federal Circuit referred to four standards of materiality for disclosure to the Patent Office: (1) an objective "but for" standard, (2) a subjective "but for" standard, (3) a "but it may have" standard and (4) Patent Office Rule 1.56 (a).[26/]

The Patent Office "standard" is an appropriate starting point for any discussion of materiality for it appears to be the broadest standard, thus encompassing the other standards, and because the Patent Office materiality standard most clearly aligns with how one ought to conduct business with the Patent Office. American Hoist v Sowa Id. The Court in American Hoist however made it clear that there is no reason to be bound by any one single standard because the answer to any inquiry into fraud on the Patent Office does not

---

26/ Patent Office Rule 1.56(a) states that information is material where there is [1] a substantial likelihood that [2] a reasonable examiner [3] would consider it important [4] in deciding whether to allow the application in issue as a patent. 37 C.F.R. 1.56(a) third sentence (1985).

begin and end with materiality nor can materiality be said to be unconnected to other considerations. Thus it was said that where an objective "but for" inquiry is satisfied under the appropriate standard of proof and although one is not necessarily grossly negligent in failing to anticipate judicial resolution of validity, a lesser showing of facts from which intent can be inferred may be sufficient to justify holding a patent invalid or unenforceable, in whole or in part; that conversely where it is demonstrated that a reasonable examiner would merely have considered particular information to be important but not crucial in his decision not to reject, a showing of facts which would indicate something more than gross negligence or recklessness may be required, and good faith judgement or honest mistake might well be a sufficient defense. Id. Hence the pertinency of the withheld information should be an initially tested. Thereafter, in light of the pertinency, the question of materiality and the degree thereof can be resolved.

The Lemelson and Frigstad patents were considered in sections IA 3 (a)(b) and (d) supra of this initial determination relating to 35 U.S.C. §103 and the findings therein are incorporated herein by reference. Complainant's pre-1974 vintage prior art is not an encapsulated lens type sheeting (FF 122). Based on the foregoing, the administrative law judge finds that the prior art relied on by respondents to support the unenforceability allegation are not pertinent and hence that there is not what the Court has termed a "threshold degree of materiality" of the nondisclosed prior art. See, J.P. Stevens & Co. v. Lex-Tex, Ltd., 747 F.2d at 1559, 223 U.S.P.Q. at 1092. Moreover there is no evidence that the complainant acted with the requisite state of mind when said prior art was not disclosed. While the complainant was aware of the Lemelson and Frigstad patents (RPF 340, 344) and its pre-1974 vintage sales (FF 122, 203, 206), there is no evidence that complainant failed to disclose said prior

art either intentionally or through gross negligence. See, J.P. Stevens & Co., 747 F.2d at 1560, 223 U.S.P.Q. at 1092 (intent or gross negligence required for inequitable content); In re Jerabek, 789 F.2d 886, 891, 229 U.S.P.Q. 530, 533 (Fed. Cir. 1986) (at least gross negligence needed for inequitable conduct). Indeed, because of the lack of relevance of said prior art, it is doubtful complainant was guilty of even simple inadvertence in the non-disclosure Cf., Hycor Corp. v. Schlueter Co., 740 F.2d 1529, 1540, 222 U.S.P.Q. 553, 561 (Fed. Cir. 1984) (simple neglignece insufficient for inequitable conduct).

Based on the foregoing, respondents have not sustained their burden in establishing that the '159 patent is unenforceable because of nondisclosure of the Lemelson and Frigstad patents.

B. Infringement

Complainant bears the burden to establish infringement by a preponderance of the evidence. Hughes Aircraft Co. v. United States 717 F.2d 1351, 1361, 219 U.S.P.Q. 473, 480 (Fed. Cir. 1983).

Complainant argues that it has sustained its burden in establishing that respondents' encapsulated lens sheeting literally infringes claim 1 in issue as shown by the testimony of complainant's expert DeVries, respondents' expert Smook and respondents' Kobayashi and by tests conducted by complainant's expert DeVries (C Post 35 to 37).

As to the dependent claims 3, 4, 5 and 7 in issue, complainant argues that the evidence establishes that the cured binder material of the "Ultralite" sheeting comprises an acrylic-based ingredient and that respondents' cover sheet also comprises an acrylic-based ingredient; that the evidence establishes that respondents' acrylic-based cover sheet is polymethylmethacrylate and that the retroreflective elements of respondents'

sheeting comprise transparent microspheres.

Responding to respondents' arguments that their "Ultralite" differs from the claimed sheeting because their sheeting has a two layer construction, complainant admits that there are differences between the "physical construction" of "Ultralite" sheeting and the examples of the '159 patent but argues that it is expected that an "infringer" will make changes because outright and forthright duplication is a very rare type of infringement. Responding to the allegation that "Ultralite" uses different chemistry than found in the specific examples of the '159 patent, complainant argues that respondents interpret the '159 patent as relating to the chemistry by which a particular binder is cured rather than the clear teaching of the '159 patent that the binder is, in fact, cured, i.e., the binder goes from a soluble to an insoluble state. It is argued that the claims do not require a particular method by which the binder is cured and that there is no limitation in the '159 patent claims that requires a specific form of chemistry to reach the required cured state (C Post R at 1, 2).

Resolution of an infringement issue is a two-step process. First, "the meaning of the claims must be learned from a study of all relevant patent documents," and second, "the claims must be applied to the accused structures." Caterpillar Tractor Co. v. Berco, S.p.A., 714 F.2d 1110, 1114, 219 U.S.P.Q. 185, 187 (Fed. Cir. 1983); Autogiro Co. v. United States, 384 F.2d at 401, 155 U.S.P.Q. at 705. As to the first step, all claims must be construed in light of the specification and the prosecution history. See, McGill, Inc. v. John Zink Co., 736 F.2d 666, 673, 221 U.S.P.Q. 944, 949 (Fed. Cir. 1984); SSIH Equip. S.A. v. United States Int'l Trade Comm'n, 718 F.2d 365, 376, 218 U.S.P.Q. 678, 688 (Fed. Cir. 1983). As to the second step, a patentee should be allowed to dominate even the future patentable inventions of others where those inventions were based in some way on the patentee's teachings. In re Fisher 427 F.2d at 837, 166 U.S.P.Q. at 23.

1. Claim Interpretation

The administrative law judge has found that the disputed claim language "increased adhesion" means a greater resistance to the pulling apart of a binder material and a cover film when that binder material that has been previously laminated to said cover film is cured and that the "increased adhesion" relates to selection of cover films and binder materials useful for the claimed encapsulated lens sheeting. (See section I A 1(d) at 29 supra relating to the meaning of "increased adhesion"). Respondents however also have argued that considering that all fourteen examples of the '159 patent have binder materials which include constituents to ensure that curing will not begin prior to thermoforming, the claimed language "curing in situ" precludes "curing" prior to thermoforming (R Post R at 12, 13).

The '159 specification describes the claimed invention as involving the "curing in situ" of a thermoformed binder, which thermoforming according to the '159 specification means that the binder initially has been subjected to heat and usually pressure so as to cause the binder to flow into good contact with the cover film but which binder has retained the shape into which it had been formed initially after removal of the heat and pressure. The term "curing in situ" is clearly defined in the '159 specification to mean the chemical reaction of constituent ingredients, such as cross-linking or chain-extension reactions, which result in relative insolubility and infusibility of the cured material (FF 14). Hence critical to the claimed invention is that in the "cured in situ" step of the claimed invention there results relatively insoluble and infusible cured material. Also critical to the claimed invention is that the binder, during the thermoforming operation, be able to flow into good contact with the cover film (FF 14). Respondents' expert Smook has stated that "curing" is a "continuum"; that when a polymer begins to cure, it progresses along that course; and that "[e]ventually" it

becomes insoluble and infusible (FF 506). Thus the term "curing", out of the context of the '159 patent, can include the formation of soluble and fusible material before thermoforming. While the critical formation of relatively insoluble and infusible material prior to the thermoforming operation would teach away from the '159 invention because insoluble material can inhibit the flow of the binder material during the thermoforming operation,[27/] the administrative law judge finds nothing in the '159 specification nor '159 file wrapper that excludes the formation of soluble and fusible material in the claimed retroreflective sheeting prior to the "cured in situ" step through "curing" as that term has been defined out of the context of the '159 patent.

Based on the foregoing, the administrative law judge finds that the claimed language "cured in situ" does not exclude crosslinking reactions which

---

27/ At the hearing McGrath testified that he is uncertain whether there is any curing in the specific examples of the '159 patent before the radiation step and to prevent confusion his definition of the term "curing" is set forth in the '159 patent (FF 68, 71). He did testify that consistent with the teachings in the '159 patent (FF 14), there may be some curing going on prior to curing in situ but such curing is small because the material is still flowable and therefore has not cured in situ; that flowability is extremely important because one must thermoform the material so that the bonds which result from wetting out the binder are in sealing contact with the cover sheet; and that if there is a lot of curing during the thermoforming operation, the material would not flow (FF 73). He further testified that the commercial materials that are used in the fourteen examples of the '159 patent have inhibitors as supplied by the vendor which would have the beneficial effect of minimizing or preventing reaction to occur prior to using a trigger; that electron beam is a trigger which will overcome those inhibitors; that the ultraviolet light decomposition of a photo initiator is another such trigger; that heat (which is used in Example 11 viz. 16 hours at 65°C FF 30) can be still another such trigger; that if one has a system that is thermally reacting from the point at which one mixes the binder material ingredients to the point that one has a completed finished product, then one has to be very careful so as not cause too much of the reaction to occur too soon; that if one had material cured up to the point of being highly crosslinked prior to

(Footnote continued to page 99)

begin prior to or during thermoforming.

2. Application of the Claims to the Accused Sheeting

Whether the accused sheeting infringes properly interpreted claims is a fact question. Fromson v. Advance Offset Plate, Inc., 720 F.2d at 1569, 219 U.S.P.Q. at 1140. It involves an inquiry into whether the accused composition literally infringes the patent in issue. It it does not, then the doctrine of equivalents can be applied.

As the Supreme Court described literal infringement in Graver Tank & Mfg. Co. v. Linde Air Products Co., 339 U.S. 605, 607, 85 U.S.P.Q. 328, 330 (1950): "resort must be had in the first instance to the words of the claim. If accused matter falls clearly within the claim, infringement is made out and that is the end of it." See also Lam, Inc. v. Johns-Manville Corp., 668 F.2d 462, 213 U.S.P.Q. 1061, (10th Cir. 1982); Studiengesellschaft Kohle mbH. v. Eastman Kodak Co., 616 F.2d 1315, 1324, 206 U.S.P.Q. 577, 585-86 (5th Cir. 1980); John Zink Co. v. National Airoil Burner Co., 613 F.2d 547, 555, 205 U.S.P.Q. 494 500-01 (5th Cir. 1980). In other words, "[a] device may infringe ... 'literally' by matching each feature of the patent claim ..." Lam, Inc. v. Johns-Manville Corp., 668 F.2d at 471, 213 U.S.P.Q. at 1067-68. In applying the claims in such a manner, the patent claims are always to be read or interpreted in light of the patent specification. Schriber-Schroth v. Cleveland Trust Co., 311 US. 211, 217, 47 U.S.P.Q. 345, 347-348 (1940); Adamsv. United States, 383 U.S. 39, 49, 148 U.S.P.Q. 479, 482 (1966).

(Footnote continued from page 98)
the thermoforming reaction, one would be unable to get a decent seal or decent wetting of the binder material with the cover film (FF 71). Respondents in their "Ultralite" process use cooling to prevent excessive cross-linking such that the reacting composition could no longer be thermoformed or laminated to the cover sheet (FF 490, para. 35, FF 492).

The chemistry of respondents' "Ultralite" in certain aspects differs from the chemistry involved in the specific examples of the '159 patent. Thus there is one binder material involved in the examples of the '159 patent which binder material is activated in the presence of radiation resulting in the formation of free radicals through the loss of hydrogen atoms or through a decomposition of initiator molecules.[28/] The activated molecules through a free radical double bond polymerization then react at active sites, such as double bonds, with other molecules to start polymer chains and to initiate crosslinking. In contrast to the specific examples of the '159 patent, respondents' "Ultralite" involves two different binder materials. Straight chain polymeric growth cannot take place in respondents' system as it can in a free radical double bond polymerization. Rather in respondents' system through the action of a crosslinking polyisocyanate agent a chain extension is formed by way of branching wherein one chain is tied to another through a reaction with a hydroxyl group on adjacent chains to form a linkage and then a second chain can attach to a third chain and a fourth chain and in this way a very long chain is obtained through chain branching. In respondents' system when one of those long chain branched molecules combine with another a network begins to form which will become insoluble (FF 70, 80, 81, 83, 365, 490 to 493, 494, 499 to 501, 505). Irrespective of the difference in the chemistries of respondents' "Ultralite" and of the polymeric systems of the specific examples of the '159 patent, the determination of the suitability of

---

28/ Both the '159 patent and respondents' "Ultralite" process show that heat alone can be used to generate curing (FF 17, 30, 490). Binder materials that will undergo radiation which includes only heat are well known in the art. McGrath's Example 11 thermally cures in situ for 16 hours at 65 degrees C). (FF 17, 19, 30).

undisclosed polymeric systmes to operate in the claimed combination in issue is beside the point. McGrath's claimed invention is in the combination claimed and not the discovery that certain polymeric systems can be cured in situ. While there are literally thousands of different choices of crosslinking systems and inventor McGrath is "sort of mute" on the chemistry of the polymeric systems, except for his examples (FF 312), there is nothing in the patent law that required patentee McGrath to list in the '159 patent all those polymeric systems which would function properly in the claimed combination. See, In re Fuetterer, 319 F.2d at 265, 138 U.S.P.Q. at 223.

As with the claimed encapsulated lens retroreflective sheeting in issue, respondents' "Ultralite" is an encapsulated lens type retroreflective sheeting (FF 11, 489, 504). The claimed sheeting in issue is to a novel combination which has a film spaced from a layer of retroreflective elements which are transparent microspheres, has a network of cured in situ narrow intersecting bonds, has a plurality of cells within which some of the retroreflective elements are hermetically sealed and has a protective cover film connected with a support film by cured in situ connecting walls which connecting walls are initially formed by thermoforming the support film. The accused "Ultralite" is to the same combination (FF 11, 489, 497, 504). The claimed sheeting is to a novel combination wherein the cured in situ connecting walls form the hermetically sealed pockets and in the support film of glass beads are embedded and have their upper hemispheres exposed in hermetically sealed pockets and their lower hemispheres covered with a metal vapor created film. The accused "Ultralite" is to the same combination (FF 11, 489). The claimed sheeting is to a novel combination wherein the protective cover film includes

an acrylic-based ingredient in which methyl methacrylate is the principal component of the monomer mixture used to prepare the protective cover film and the cured in situ binder material includes an acrylic-based ingredient. The accused "Ultralite" is to the same combination (FF 11, 489). It takes more force to separate the cover sheet from the binder sheet of the claimed sheeting after curing than before curing (FF 30). Using a knife on "Ultralite" it takes more force to separate the cover sheet from the base binder sheet after curing is completed than it does immediately after thermoforming (FF 511).

Respondents' expert Smook testified that while respondents' binder material in the preparation of their "Ultralite" starts curing immediately after it is formulated and cures continuously before and after respondents' thermoforming step, probably the majority of respondents' binder material cures after the thermoforming step. He testified that he had no way of knowing how far the cure had progressed at various stages of respondents' process and until he saw complainant DeVries' solubility samples, Smook did not know. Even now Smook does not know how far the cure has progressed up through the thermoforming step because there can be "considerable chain extension before insolubilization occurs" and the insolubility also can be masked to some extent by the insoluble titanium dioxide being present in respondents' starting materials. Nevertheless respondents' expert Smook conceded again that probably the bulk of the cure in the preparation of respondents' "Ultralite" occurred after thermoforming (FF 505). Smook further testified that chemical reactions in the formation of "Ultralite" proceed at

a different rate depending on the temperature; that the reaction can be slowed down to some extent by cooling the mixture of reaction products; and that this is done in the "Ultralite" process to prevent the reaction from proceeding so far that it can no longer be thermoformed or laminated to the cover sheet (FF 492). Respondents' Kobayashi testified that before the thermoforming step in the "Ultralite" process and when certain binder one material is rewound, the "rewinding area is air conditioned to keep the room temperature below 20°C to prevent excessive cross-linking of the material of binder 1" (FF 490, para 35). Smook also agreed that in the accused sheeting there is a chemical reaction of constituent ingredients such as crosslinking or chain extension reactions which will result in the accused sheeting becoming relatively insoluble and infusible (FF 508). DeVries' solubility tests showed that with respondents' uncured binder material, the material would almost immediately dissolve while with respondents' cured binder material the material would not dissolve and the solvent has difficulty in lifting the binder material from the cover sheet which showing is consistent with McGrath's definition of "curing" in the '159 specification (FF 543 to 550).

Referring to the tests that complainant's DeVries conducted in support of complainant's allegation of infringement, it is not denied that tests were run in part on respondents' accused sheeting material. DeVries also ran razor blade tests on binder one material obtained from respondents (FF 532). Respondents and the staff challenge those tests because DeVries performed "accelerated" curing. It is not denied however that the binder one DeVries utilized is the binder one which is thermoformed (sealed) in respondents' process to respondents' cover film (FF 490).

For DeVries' tests, initially DeVries and complainant's Grunzinger went to Japan to set up a lab at complainant's facilities in Japan which were near

respondents' lab in Japan (FF 533, 534). In order to conduct peel strength tests of the type disclosed in Example 11 of the '159 patent (FF 30) to determine whether the claimed language that "the bonds have increased bond strength to the cover sheet and base sheet" is met by respondents' accused sheeting, DeVries acquainted himself with complainant's tensile testing machine and complainant's universal testing machine in Japan which are similar but somewhat different from DeVries' machine at his lab at the University of Utah. DeVries has had extensive experience with those types of machines but each piece of equipment has its own little differences (FF 533).[29/] DeVries then visited respondents' plant in Japan to observe respondents' manufacturing process. Respondents provided DeVries with sheeting in the "Ultralite" process obtained immediately after respondents' thermoforming step. DeVries took this sheeting immediately to his lab in Japan where panels were cut from the sheeting (FF 534). Some of the cut panels were then stored between dry ice so that "we could essentially freeze [the sample] in the condition in which it was manufactured" after respondents' thermoforming step. Other samples were prepared for running 90 degree peel strength tests (in Japan a floating roller type peel test). The peel strength tests were designed to be conducted upon respondents' sheeting that had been cured by DeVries at room

---

29/ Over the years DeVries has conducted many peel test measurements and there are a number of peel test standards. The peel test in issue differs a little bit from the standards in that with the peel test in issue there is a grid work formed by the narrow intersecting binds. With the standard peel test, it would be like working with scotch tape where you have a sealing completely across the material. However DeVries found no problem in working with the grid type samples because the tests involved only comparative testing, i.e. the same basic geometry was involved both right after thermoforming and after the material had been subsequently cured (FF 533, 552). Respondents' Smook was not critical of DeVries' technique (FF 563).

temperature, at 35 degrees C. and at 65 degrees C. Simultaneous with the running of peel strength tests, DeVries was conducting solubility tests because as DeVries testified, the '159 patent talks about the material becoming relatively insoluble as the material cures (FF 534, 539).

DeVries' solubility testing performed in Japan and in the United States was done by applying toluene[30/] and other solvents to respondents' thermoformed sheeting after the sheeting had been allowed to cure at various times and temperatures. In such testing, a piece of sheeting, about an inch long and one-third of an inch wide, was placed in toluene and then observed. DeVries testified that the tests showed that with curing, respondents' thermoformed binder material became insoluble. Thus after two weeks at room temperature, the binder material was essentially completely insoluble. The same degree of insolubility was achieved in a shorter period of time at the higher temperatures of 35 and 65 degrees Centigrade (FF 535).

DeVries also tested respondents' "Ultralite" sheeting by observing the effect of solvent under a microscope. Thus certain samples of respondents' sheeting with binder material left on the cover sheet after running a peel test were observed as a drop of solvent was placed on the samples. With the uncured material, the binder material would almost immediately dissolve. With the cured material, the binder material would not dissolve and the solvent had difficulty in lifting the binder material from the cover sheet. In fact the cover sheet had to be dissolved first and the binder material was tightly held

---

30/ Respondents' Myata patent which describes respondents' "Ultralite" process discloses toluene as a solvent (FF 545).

to the cover sheet (FF 536).[31/]

DeVries conducted peel strength tests on respondents' sheeting not only in Japan but also in his laboratory at the University of Utah. Samples were prepared by attaching respondents' sheeting to an aluminum plate with an adhesive and then a backing tape to facilitate pulling and to reinforce the the sample. A razor blade was used to initiate the failure between the cover sheet and binder material. The sample was then placed in a tensile testing machine and the peel strength was measured by pulling at the sample. DeVries conducted the peel strength tests by following curing at different curing times and temperatures on material obtained from respondents that had been thermoformed. To make the best comparison DeVries would test the same sample at different times. He would peel back maybe half an inch, cure the sample for a particular time and at a particular temperature and then peel back an additional half inch to measure the difference in peel strength. DeVries continued this process until he ran out of sample (FF 537).

Sample materials upon which DeVries conducted the peel strength tests are in evidence (FF 536, 553 to 558). Also photos of the drying ovens, the peel

---

31/ While the use of the microscope is not discussed in the '159 patent in determining the existence or non-existence of physical phenomena, courts have under appropriate circumstances derived aid from any relevant technique, even one not developed until after the invention at issue. See, Helene Curtis Industries, Inc. v. Sales Affiliates, Inc. 233 F.2d 148, 109 U.S.P.Q. 159, 164 (2nd Cir. 1956). See also, Cosden Oil & Chemical Co. v. American Hoechst Corp. 543 F. Supp. 522, 214 U.S.P.Q. 244, 250, 251 (D. Del. 1982), where the court held that: "[i]f the scope [of the claims of a patent] is determined in the context of the existing art, I perceive no advantage and considerable mischief in freezing measurement technology and disregarding new learning which can establish, almost beyond preadventure, the precise characteristics of the accused substance. I do not believe the law so requires" (Footnote omitted). The administrative law judge agrees with that court's rationale.

strength testing machines, test samples and vials showing the solubility testing. In addition photomicrographs of material relating to the solubility tests DeVries performed are in evidence (FF 540, 551). The photomicrographs showed to DeVries the rather dramatic effect which curing of respondents' sheeting had relative to the sheeting's solubility, and convinced DeVries that associated with the curing was a dramatic increase of adhesion of the binder material to the cover sheet as demonstrated by the peel strength tests (FF 549). In addition DeVries, in observing the accused sheeting under a microscope, testified that he did not see a sharp demarcation between the cover sheet and the base sheet but rather a blending. According to DeVries, the blending showed an "interphase" rather than an "interface" (FF 564, 565).

The experimental results of DeVries' were graphically presented. The graphs showed peel strength as a function of time and cure. The results demonstrated to DeVries that respondents' sheeting obtained after respondents' thermoforming step, as described in the '159 patent, did cure with time to relative insolubility and the bond strength of respondents' sheeting did indeed increase (FF 559 to 563).

DeVries' peel strength tests on respondents' accused sheeting showed to DeVries that curing in situ of respondents' binder, whereby the material becomes relatively insoluble as determined by solubility tests, results in a substantial increase in the bond strength of the claimed thermally formed "network of narrow intersecting bonds" (FF 597, 598).

With respect to determining whether the claimed language that "the binder material is selected from materials that show increased adhesion ... when a solid layer of the material that has been previously laminated to said sheet

is cured "is met by respondents' accused sheeting, DeVries began a series of razor blade tests in his lab in Utah about January 21, 1988 (FF 566, 567). In those tests DeVries mixed the solution of respondents' binder layer one with respondents' cross linking agent in proportions respondents employ. The binder layer one composition was then coated out as a solid layer, not in a gridlock pattern. Then the solid layer was dried for roughly four hours at which time the layer was no longer tacky. The dried material was then cut into small pieces and the pieces deposited on polymethylmethacrylate commercial sheeting and also on respondents' cover sheet which had been bonded to aluminum. Then the composites were placed in an oven and hot pressed to cause thermoforming. Thereafter the razor blade test of Example 1 of the '159 patent was conducted. Then remaining portions of the samples were placed in an oven at 60 degrees C. for various periods of time. The longest time was fourteen hours. Referring to a video tape, DeVries concluded that when curing respondents' binder one it was much more difficult with the aid of a razor blade to separate respondents' binder one material from respondents' cover sheet and hence that the claimed language with respect to binder material is met by respondents' accused sheeting (FF 568, 569, 581, 582, 583, 584, 586 to 595).

In another series of tests, DeVries took samples of respondents' sheeting that had been obtained in Japan after respondents' thermoforming step, determined that the binder material was still soluble and ran some peel tests on them. Thereafter the samples were exposed to a vacuum and volatiles were removed. Subsequent peel strength tests on the samples showed that the peel strength of the samples remained essentially constant thus demonstrating, and as DeVries concluded, that the removal of volatiles including solvent did not

affect the peel strength of respondents thermoformed binder one (FF 568, 598). DeVries further concluded that respondents' sheeting and the sheeting described in the '159 patent as exemplified by complainant's high intensity retroreflective sheeting are identical in all essential features based on the mechanical and physical tests DeVries conducted; that they are both soluble after thermoforming but before curing; that they are insoluble, through cross-linking, after curing; that they both manifest an increase in bond strength as measured by the peel test associated with the curing; that they both behave the same in the toluene drop experiment under the microscope; and that while DeVries has not run the razor blade test on complainant's material he has seen it conducted at least through video and complainant's material behaves very much the same as DeVries observed in the case of respondents' material (FF 291, 309).

Respondents argue that a report dated August 4, 1983 of complainant's Grunzinger, just after complainant learned of respondents' accused sheeting, commented on one of Grunzinger's first tests on a "simulated version of respondents' sheeting" and reported that the results thereof were that binder material without isocyanate maintained relatively constant adhesion while the binder material with isocyanate actually decreased in adhesion value (R Post at 22 to 24). The composition however that Grunzinger examined and is reported on in the August 4, 1983 report was merely a composition "which generally matched the description" that complainant had from an analysis of a sample received from Biersdorf and which composition was a polymeric composition available from another research project (FF 639, 640).

Grunzinger in a January 1984 report noted that because the Biersdorf binder material was a cured, cross-linked material, it was difficult to reconstruct exactly the actual composition of the uncurred binder coating and attempts to simulate the construction did not "exactly duplicate" the composite physical properties of the Biersdorf sample; that an exact simulation could be provided either through (1) quantitative analysis of a larger sample followed by material/composition designs which fit the analytical results, or (2) analysis and use of the actual input materials in preparing the retroreflective sheeting sample (FF 638). Respondents have argued that varying the ingredients in the binder material, such as the type of polymer, the type of cross-linking agent and the type of solvent will have a dramatic effect on the bond strength of "Ultralite" sheeting and that the proper adjustment of the ingredients and ratio of ingredients is very important (RPost at 16). Grunzinger's work in 1983, 1984 and 1985 supports this argument (FF 640). The administrative law judge finds that it has not been established that the binder system reported in the August 1983 report has the same type of ingredients and ratio of ingredients as found in binder one of the accused sheeting. Moreover Grunzinger's conclusion in 1986 as to respondents' binder, the analysis of which was made when larger quantities of respondents' binder were available, was that a bead binder system of the simulated binder of respondents can cure in situ after thermal sealing to a non-oriented polymethylmethacrylate cover film to give improved seal strength as described in claim 1 of the '159 patent (FF 633).

Respondents and the staff argue that DeVries' peel tests on respondents' accused sheeting are not material with respect to the claimed clause requiring that "the binder material is selected from materials that show increased

adhesion ... when a solid layer of the material that has been previously laminated to said sheet is cured" because that language requires pre- and post-curing comparisons of "adhesion" of a solid layer of binder material; that with respect to DeVries' razor blade tests, they argue that he did not cure the material the way that respondents cure their binder maerial in their process of manufacture, i.e., by aging (curing) at a temperature in the 29-33°C range for at least ten days but instead cured his test samples in an oven heated to 65°C for 2 to 14 hours because "he was too busy with other matters" 32/ and testified that:

> "I didn't feel I had ten days to wait." (Tr. 1095, lines 4-7). "I did not have ten days to devote to the [project] ... I have a lot of other commitments. I have a lot of other commitments. I have a very active research project; I have teaching; I have travel commitments." (Tr. 1117, lines 2-6);

that as DeVries readily conceded, he did not know what effect his accelerated curing had on the results of the razor blade test he ran on respondents' binder material; and that DeVries did not run a control razor blade test with no isocyanate (R Post R at 13 to 16) (S Post 17 to 20).

DeVries' accelerated cure was the subject of in-depth questioning at the hearing (FF 598, 620). As DeVries testified with reference to respondents' binder one material used in manufacture of respondents' "Ultralite" and which in the manufacture is bonded to the cover sheet of respondents' encapsulated lens type sheeting (FF 490), DeVries in Japan and subsequent to returning from

---

32/ At closing argument, the staff agreed that electron beam radiation is irrelevant in DeVries' testing because respondents' do not use that method to cure its binder material and argued that complainant should conduct any test to support its infringement allegation "as close as possible as to the actual parameters used by Seibu in its process" (Tr. at 2140).

Japan ran room temperature, 35 degree C temperature and 65 degree C temperature tests and found that the cure of said thermoformed binder one material can be accelerated; that as taught by the '159 patent the curing of the binder one material was accompanied by an increase in the difficulty in separating said binder one material from the cover sheet; and that said conclusions were based on the solubility tests, razor blade tests and peel strength tests spelled out in the '159 patent and also in the microscope tests, all of which tests were conducted under DeVries' direction (FF 620).

The staff in support of its position that DeVries could not predict what effect the acceleration would have on the curing quotes the following testimony of DeVries (S Post at 19):

> Q And so you couldn't predict -- certainly, you couldn't predict what effect that might have on the kinds of chemicals that are used in the Seibu binder material, is that correct?
>
> A That's right.
>
> Q So you don't know what effect your accelerated times and temperatures in the razor blade test that you've run had on the chemical reactions within the Seibu material, is that correct?
>
> A That is correct. I do not know the chemistry of it.

However, the staff omits the very clearly material <u>next</u> question to, and answer of, DeVries, <u>viz</u>.:

> Q And you do not know how it effected curing, is that correct?
>
> A I do know how it effects curing [(FF 620)].

DeVries further testified:

> A I have a lot of information. There it is.
>
> THE WITNESS: CX-183, Your Honor. [(FF 620)]

With respect to CX-183, DeVries testified:

> THE WITNESS: Yes. It's the peel strength as a function of time at three different temperature levels -- room temperatures 35 degrees C, which would be near, then, the temperature that the Seibu product is used; and 65 degrees C, which is near the temperature we're talking about here -- five degrees higher in each case.
>
> And if you look at this you can see that in a matter of hours you can get as much cure at 65 degrees C -- as manifest by increase in peel strength -- as you do in weeks, really, or several days, anyway, at room temperature.
>
> Now this isn't the only evidence we have for that. We also have the evidence of the vials -- the solubility. That's not the only evidence we have for it, Your Honor.
>
> We also have the evidence of the microscope, where you're looking in there, and you can see right in there the difficulty with which the solvent has a lifting the -- the binder material from the cover sheet.
>
> * * *
>
> And it seems that that's somewhat appropriate here. If these things behave exactly the same in all those other ways -- peel strength, solubility, microscope toluene drop adhesion lifting up, then I didn't have the ten days to wait anyway, if you follow what I'm saying, after I got the material.
>
> So I had to do something. And I did the best I could in the time. Now granted, if I had unlimited time -- which none of us have -- I mean, if you're going to wait to run every test you possibly can, you'll never get anything done.
>
> But nonetheless, here I have three indicators that a few hours at 60 or 65 degrees is like several days at room temperature. [(FF 620)]

The staff argues that the "other tests" do not satisfy the earlier characterization clause of indenpendent claim 1. The "other tests" are not identified by the staff and the administrative law judge finds nothing in the record to refute DeVries' testimony that his CX-183 test and the solubility tests established that DeVries' accelerated duplication of the curing step is

equivalent to what respondents actually do.[33/] Moreover while the respondents and the staff give weight to the tests of respondents commented on in Section I A 4 (c) (i) at 80, supra and which were represented by respondents at the closing arguement "to simulate what happens in the normal course of affairs as the solvent leaves the materials" (Tr. at 2171), those tests of respondents involved accelerated curing. Thus while respondents' Smook testified that those tests were designed to "simulate" what happens in the "Ultralite" process (FF 444) and respondents' Kobayashi testified that the 30 degrees C was a "reproduction of the aging [curing] of commercial ULG ["Ultralite"]" (FF 441), samples relied on in the testing included samples

The respondents and the staff argue that DeVries did not contend that his accelerated method in his razor blade test[34/] was equivalent to the full two weeks used in respondents' process (eg. S Post at 19). However DeVries testified:

> Q You are satisfied that the accelerated cure from 240 hours to 2 hours, and the accelerated temperature from 30 to 60 degrees on the centrigrade scale wouldn't effect the results that you obtained in the razor blade test?
>
> A You know, you keep on absolutes. and I guess -- there's the old adage, never say never. And I want to modify one thing. You said -- you keep saying two hours, and I want

---

33/ The staff has not objected to the complainant's evidence establishing that DeVries' tests, which also involved accelerated curing, shows that the bonds in respondents' accused sheeting meet the second characterization clause of independent claim 1.

34/ As the record demonstrates the razor blade test is an initial qualitative screening test for selection of binder materials (FF 626).

to say a minimus of two hours, because I ran a lot of tests; and I know some of them were as long as 14 hours, do you know what I mean? Not a lot of tests -- I ran a number of tests. And some of them were as long as that.

It's my opinion that in cooperation with all of the other things that I have presented here, a series of what I consider to be very, very careful experiments were made before this one [razor blade tests] here.

And what we saw was an increase in adhesion as cure occurred, where cure is as defined in the McGrath patent. Now I can say that different ways, but I don't know if I'll ever get it any more clearly said than that, because maybe my -- limitations in by [sic] own ability to express myself.

But I feel that we have a preponderance of evidence here that as cure occurs, as measured by the method that McGrath himself spelled out, that the material becomes insoluble -- that accompanying that is an increase in peel strength; is an increase in the difficulty with which -- is the difficulty of removing the material from a sheet with a razor blade, as is evidence by looking at the solvent, trying to lift it off the cover sheet.

To me it seems overwhelming, but -- as I look through it. That evidence is there.

Q Are you confident that the curing -- can you focus for me, and with me, on the razor blade test?

Are you confident that the curing that occurred during the two hour, or however many hours, at the temperature of 60 degrees -- that that curing caused an increase in adhesion?

A I am confident that the material cured, and I am confident that that was accompanied by an increase in adhesion. And I don't want to get involved in the mechanisms; although I think the mechanisms that McGrath describes are reasonable mechanism. But he, himself says he doesn't want to be tied down to a single mechanism.

But I'm confident, yes, that that material cures,and accompanying that cure is an increase in adhesion.

Q And is -- are you confident that that increase in adhesion is caused by the cure?

A Looking at all of the data that I have I'm confident that the increase in bond strength that's described in here [claim 1], and the increase in adhesion --

* * *

THE WITNESS: In Claim 1 -- that as it cures that cure is accompanied by an increase in adhesion.

I have seen that in every test that I have conducted, which have been extensive.

* * *

Are you confident that the increase in adhesion that you say you found in your test was caused by the cure?

A I'm sure that's one of the causes; there may be others. I'm not going to -- like I say. You never say never. But I am confident that is a major cause [(FF 620)].

The respondents and the staff argue that DeVries recognized that solvent evaporation "could have a significant effect on the adhesion of the binder material" (eg. S Post at 20). DeVries however testified:

Q Are you confident that the -- what ever increase in adhesion you found wasn't caused entirely by the evaporation of solvent?

A I'm confident that that's not the case. [(FF 620)].

The staff argues that the tests that DeVries performed to show that adhesion was not caused entirely by the evaporation of solvent was conducted on sheeting and that he did not consider that factor in conducting the tests that resulted in CPX-71 to 75.[35/] (S Post at 21).[36/] The record

---

35/ While the staff argued that DeVries did not consider the effect of solvent in his razor blade tests, the staff at closing argument argued that "with respect to Respondents' test on a solvent evaporation or residual solvent content -- whatever you want to call it -- they could not do a razor blade test to measure the effect of the solvent" (Tr. at 2168).

36/ In the staff's reply submissions, it was argued that the prosecution history discussed the first characterization clause and whether the claimed "increased adhesion" is a result of curing, but yet the complainant in

(Footnote continued to page 117)

establishes that the tests that DeVries performed were with respondents' thermoformed sheeting used in the commercial production of "Ultralite" before any curing in situ and which sheeting necessarily included respondents' binder one used in the razor blade tests. Those tests showed that evaporation of volatiles from the thermoformed sheeting did not affect the peel strength (FF 568, 598). No persuasive evidence has been presented that the physical phenomenon of solvent evaporation would likely have a different effect on respondents' same cover sheet and binder material though in a solid layer such as used in the razor blade test. DeVries, on the other hand, persuasively testified that his peel tests on uncured respondents' sheeting with vacuum removal of solvent did show that there is no relationship between volatile solvent removal and "increased adhesion." An artificial contrary finding would conflict with this uncontradicted expert testimony.

The respondents argue that the evidence demonstrates that the solvent evaporation factor accounts for the claimed increased adhesion in respondents commercial "Ultralite" (R Post at 24, 25). Yet the tests that the respondents rely on do not involve the accused sheeting in issue See Section I A 4(c) (i) at 80 supra. As the staff has argued tests relative to infringement should be as close as possible to the actual parameters used by respondents (Tr. at 2150).

(Footnote continued from page 116)
construing the claims failed to consider the prosecution history. It was also repeatedly argued by the staff that contrary to complainant's interpretation of the claims, the evidence demonstrates that the claimed increased adhesion "results from curing" (S Post R at 1 to 4). In view of the argument made by the staff in its post hearing submission that DeVries did not consider the solvent evaporation factor, it is assumed that the staff intended to argue that the increased adhesion found in DeVries' razor blade test was not shown to "result from curing".

Based on the foregoing the administrative law judge finds that complainant has sustained its burden in establishing that each of independent claim 1 and dependent claims 3, 4, 5 and 7 are literally infringed by respondents.

II. Importation or Sale

An element of a violation under section 337 is that any unfair act be in the importation or sale of imported articles. This element is not contested by respondents, who have admitted subject matter jurisdiction (RPFF 1) and by their response to the complaint admitted complainant's allegation of their sales of imported high intensity sheeting in the U.S. market. (Complaint, paragraphs 27, 28, admitted by Response at 8, 12). Respondents have sold in the United States imported high intensity sheeting since approximately July, 1985 (FF 642).

Respondents' sales of "Ultralite" high intensity sheeting to U.S. customers were in dollar value $ in 1985, $ in 1986, and $ in 1987 (FF 644). As indicated by respondents' average price during those periods, "Ultralite" 1985 sales were approximately square feet, 1986 sales were square feet, and 1987 sales were square feet of sheeting (FF 645).

Imports made and received by respondents of their "Ultralite" sheeting from Japan were square feet in 1985, and square feet in 1986 (FF 647). Taken at the time of exportation from Japan to the United States, respondents' exports indicate transfers by respondent manufacturer Seibu Polymer Chemistry Industry Co., Ltd. to its exclusive importer Seibulite International, Inc. (and before July, 1986 to Seibu Polymer Chemical Co., Ltd.) of square meters in 1985 or sq. ft.,

square meters or square feet, and for the first six months of 1987 square meters or square feet (FF 643, 646). The act of importation itself is actually effected upon shipment to U.S. customs territory with the intent there to unlade the imported shipment. 19 U.S.C. section 1337(j); 19 C.F.R. section 101.1(h); Certain Reclosable Plastic Bags, Inv. No. 337-TA-266 (unreviewed TEO ID August 1987) at 45. However, sales made by manufacturers to those outside the United States for subsequent importation are considered sales by the manufacturer-"owner" of the articles and are subject to jurisdiction under section 337. Certain Welded Stainless Steel Pipe and Tube, Inv. No. 337-TA-29, USITC Pub. No. 863 (Comm. 1978) at 11-13.

Based on the foregoing complainant has established respondents' importation of the accused sheeting to, and its sale in, the United States.

III. Domestic Industry

Complainant argues that the evidence shows that there is a domestic industry defined by its domestic operations "involved in the manufacture, distribution and sale and research and development of high intensity retroreflective sheeting according to the '159 patent." (C Post at 41-42).

The staff argues that complainant's high intensity sheeting is made according to the '159 patent, as shown by razor blade and peel tests showing increased adhesion and complainant's use of electron beam radiation to induce curing in situ after thermoforming. The staff reasons that the domestic industry is composed of the production-related operations of the patent owner and its licensees devoted to the exploitation of the patent at issue, but also encompasses such activities as distribution and sale and research and development (S Post at 34 to 36).

Respondents in their post hearing submissions did not challenge complainant's definition of the domestic industry, or propose contrary findings in response to the specifically cited evidence of the proposed findings of complainant and the staff (CPF 258, SPF J1 to J9) regarding complainant's domestic practice of the '159 patent, with the exception of proposing that what complainant measured on its material was both "adhesive failure and cohesive failure" and not "increased adhesion" (RPF 406). At closing arguments respondents did argue that there is insufficient proof that complainant practices the '159 patent in its domestically produced high intensity grade sheeting (Tr. at 2191-2192). However, no contrary evidence or specific deficiency in complainant's proof was pointed out by respondents at closing argument.

The existence of a domestic industry in patent-based investigations under the current section 337 requires domestic production related activities related to the patented product. Where a portion of the production activites occurs abroad the nature and relative signficance or value added by the domestic operations must be assessed. All of complainant's high intensity retroreflective sheeting is manufactured domestically (FF 648, 654).

Complainant's high intensity product has a binder layer of material which is cured in situ by electron beam radiation after it is thermoformed to the cover sheet (FF 651). The binder material shows increased adhesion to the cover sheet after curing as shown by razor blade tests (FF 291, 309, 649). Increased bond strength is shown by peel strength and shrink tests (FF 291, 309, 649-650). The binder material used is essentially set out in examples of the specification (FF 270, 649). Also, the commercial experience with reduced delamination of complainant's high intensity sheeting is

circumstantial evidence further supporting this factor (FF 653). There is no contrary evidence and no testimony regarding any alternative source of increased adhesion in complainant's sheeting other than curing as claimed in the '159 patent.

In accordance with claim one the complainant's sheeting is enclosed lens sheeting with retroreflective elements, glass microspheres, partially embedded in and disposed over a base sheet; a transparent cover sheet of polymethylmethacrylate material spaced from that base sheet; and a network of relatively narrow and intersecting bonds which from a top plan view are arranged in an arrangement of intersecting hexagons appearing across the sheeting and each encloses a hermetically sealed capsule or cell between the cover and base sheets and the bond walls; the bonds are initially formed by a thermoforming process under heat and pressure through the use of a heated platen by which they are pressed into sealing contact with the cover sheet. (FF 651-652). The sheeting contains binder material of curable acrylic-based material, as required under claim 3 (FF 651). The cover sheet is made of an acrylic based polymethylmethacrylate ingredient, as required in claims 4 and 5 (FF 651). Pursuant to claim 7 the retroreflective elements in the high intensity sheeting are transparent microspheres (FF 652). The administrative law judge determines that complainant's domestically manufactured high intensity sheeting is covered by claims 1, 3, 4, 5 and 7 of the McGrath '159 patent (FF 649-653).

Based on the foregoing, the administrative law judge finds that the complainant has shown the existence of a domestic industry comprised of complainant's domestic production and sale of its high intensity retroreflective sheeting, according to the asserted claims of the '159 patent.

IV. Efficient and Economic Operation

Complainant contends that the evidence clearly establishes that its high intensity retroreflective sheeting domestic industry is efficiently and economically operated and includes evidence of the following factors: complainant's technical efforts in research and development and the expenditures made therefor since 1973; capital investment in facilities and equipment resulting in cost reduction and efficiencies; advertising and market development efforts; and complainant's quality control procedures and employee benefit programs (C Post at 42-43).

The staff agrees that the domestic industry in issue is efficiently and economically operated citing the following: complainant's substantial expenditures for new equipment and improvements and specific improvements for equipment; substantial investment in research and development; and substantial profits from high intensity sheeting; technical service and quality control programs; and significant expenditures on advertising, promotion and development of consumer goodwill (S Post at 37-38).

Respondents have not challenged the position of the complainant and staff that the domestic industry in issue is efficiently and economically operated.

Section 337 requires that the domestic industry be efficiently and economically operated. Factors relevant to determining efficient and economic operation include: use of modern equipment and manufacturing facilities; constant upgrading of manufacturing equipment; employee incentive benefit programs; sustained profitable operation; substantial investment in research and development; effective quality control programs; and substantial expenditures in advertising, promotion, and development of consumer goodwill.

Certain Methods for Extruding Plastic Tubing, 218 U.S.P.Q. 348 (Comm. 1982); Certain Caulking Guns, 223 U.S.P.Q. 338 (Comm. 1984). In the domestic industry composed of complainant's domestic production of high intensity grade retroreflective sheeting there are: sustained profitability (FF 670), extensive quality control, and research and development programs (FF 663-664, 668-669, 671), modern facilities and equipment and continued upgrading therein (FF 658, 660-663, 668), extensive sales, marketing and advertising efforts (FF 657, 664-667), and employee benefits programs (FF 662).

Based on the foregoing the administrative law judge finds that complainant has established that the domestic industry in isssue is efficiently and economically operated.

V. Substantial Injury

Complainant contends that substantial injury to the domestic industry has occurred as a result of respondents' unfair acts. It argues that respondents have made significant sales, with sales volume increasing annually, and significant market penetration, and that complainant and respondents are the only competitors in the United States in the high intensity retroreflective sheeting market. Complainant argues that there is no doubt that it has actually lost sales in at least an amount equal to respondents' entire net sales of "Ultralite" sheeting. According to complainant, respondents are "marketing" its "Ultralite" sheeting in all 50 states in direct competition with complainant, citing direct competition in bidding on governmental agency contracts and certain specific lost sales and revenue. Complainant further points to certain instances where it has won head to head bidding over respondents for high intensity sheeting, but was required to reduce its price

in order to match respondents' price. Complainant also points to price reductions in its work zone category sheeting allegedly caused by competition with respondents. It is argued by complainant that it has no way of telling the full amount of sales respondent are making to private contractors[37/], so complainant's identified losses to respondents for direct government sales understate the actual losses suffered. Prior to respondents' entry in the United States market, complainant argues that complainant enjoyed all sales made in this market and respondents' entry has deprived complainant of sales and resulted in substantial losses to complainant (C Post at 44-47).

The staff contends that respondents' imports of sheeting have caused substantial injury, reasoning that the relevant market in this investigation is composed of two players, complainant and respondents, and that respondents' entry into a market previously occupied by complainant has deprived complainant of sales and resulted in substantial losses to complainant. The staff argues that testimony concerning competition between high intensity grade and respondents' "super engineering grade" sheeting shows that the amount of such competition is insignificant. Numerous specific lost sales to respondents with government agencies, and to price reductions resulting in

competitive bidding practices. The staff reasons that while complainant has

---

37/ Customer lists and sales history information, though confidential, can generally be requested in discovery under the protective order.

not suffered all the adverse economic effects which the Commission has in the past taken into account in determining injury, including particularly increased profits and sales to complainant, a finding of injury is not thereby precluded and that the evidence as a whole supports the conclusion of substantial injury (S Post at 38-43).

Respondents counter that complainant holds a commanding position in the U.S. high intensity sheeting market with an extremely successful and profitable product and a "massive" market share. Respondents further contend that the high intensity market has been expanding so quickly since their entry in 1985 that complainant's sales have been pulling away from that of respondents in value with its sales lead increasing. Increasing sales by complainant and are pointed out. To counter complainant's allegation of price suppression respondents point out that complainant's list prices have increased steadily during the years of respondents' market presence; respondents note that the price suppression alleged by complainant constitutes less than 1 percent of complainant's sales value of high intensity product. Respondents conclude that there is no way, short of reading the injury standard out of section 337 patent cases, for respondents' sales to have the effect of substantial injury on 3M. (R Post at 43-49).

In their reply brief respondents' argue that complainant has, by looked at the significance of its sales <u>in vacuo</u>; and that given respondents' tiny sales base, any

been only about a decline in complainant's total maximum theoretical revenues. Respondents further point to positive trends in complainant's production, employment, profits, prices, and contrast them with

A required element of a violation under section 337 is that the unfair acts of respondents have "the effect or tendency to destroy or substantially injure" a domestic industry. Under section 337, injury is not presumed by the mere fact of the importation of infringing imports; rather separate from infringement, distinct economic injury to the domestic industry which is substantial in degree must be shown to have occurred as a result of those imports by independent proof. Corning Glass Works v. International Trade Commission, 799 F.2d 1559, 230 U.S.P.Q. 822,827-828 (Fed. Cir. 1986). The requirement of a domestic industry confirms that the section 337 injury requirement is not designed simply to protect a patentee from the loss of possible royalties presented merely per se by the fact of infringing imports. Id. Proof of a lost sale or profits of a specified amount by itself is not generally sufficient to show the substantial degree of injury required under section 337. Id. Substantial injury under section 337 generally stems from economic competition between the accused imported articles and products of the domestic industry. See, Certain Characters with Gremlin Depictions, Inv. No. 337-TA-201 (Comm. 1986) (no injury found where accused imports competed with licensed imports but did not compete with domestically made licensed products); Certain Rotary Wheel Printing Systems, Inv. No. 337-TA-185 (Comm. 1985) (no injury found where domestically produced articles competed in a

different market segment than that of the imported articles). However, where the unfair practice alleged involves infringement of a patent, copyright or trademark right, "even a relatively small loss of sales may establish" the requisite injury under section 337; the lesser quantum of injury required in intellectual property based investigations is in recognition of the entitlement to exclusive marketing of the product protected thereby. Bally/Midway Mfg. Co. v. U.S. International Trade Commission, 714 F.2d 1117, 219 U.S.P.Q. 97, 102 (Fed. Cir. 1983); Textron Inc. v. U.S. International Trade Commission, 753 F.2d 1019, 224 U.S.P.Q. 625 (Fed. Cir. 1985); Akzo, N.V. v. U.S. International Trade Commission, 820 F.2d at 1148, 1 USPQ2d at 1251, 1241 (Fed Cir. 1986). The determination of injury and the signficance of economic effects is "intimately wed to the particular facts of" each investigation. Akzo, 820 F.2d at 1148, 1 USPQ2d at 1251.

The Court of Appeals for the Federal Circuit has recognized and affirmed the Commission's general rule on the required quantum of injury that the infringer must at least hold, or threaten to hold, a significant share of the domestic market in the covered articles or has made a significant amount of sales of the articles. Id. at 828. The Court in Corning Glass Works' affirmance of the Commission's no injury determination reasoned that the respondents' several million dollars of infringing sales were not relatively speaking a "significant amount" of sales providing substantial injury, because injury can not be based in vacuo simply on the dollar amount of sales. However the Court stated that the Commission's comparison of respondents' sales with total U.S. sales of optical fiber was meaningful and indicative of a relatively significant vs. de minimis level of sales. Thus such market share comparisons are proper considerations for Commission determination of

injury, as confirmed by Corning Glass Works. In that investigation lost sales could not be shown where the domestic industry had substantial production shortfalls and could not fully satisfy domestic demand for the product. However no arbitrary market-share benchmark has been imposed by the Court of Appeals for a finding of substantial injury. Id., at 1251.

Factors relevant to a consideration of substantial injury to a domestic industry under section 337 include the following: lost sales to respondents; underselling in price by respondents; decreased employment in the domestic industry; excess domestic capacity; significant volume of imports; declines in profits; and the presence of domestic or non-infringing imported substitutes in the market for the articles under investigation. Vertical Milling Machines, 223 U.S.P.Q. 332 (Comm. 1984).

Respondents' contention of non-injury is based on an asserted lack of adverse economic effects of a sufficient degree, rather than upon a lack of proof of causation (Tr. at 2193-2194).

The record establishes that complainant and respondents are the only manufacturers of high intensity grade sheeting sold in the U.S. market, and it is uncontested that respondents do compete directly with complainant in the sale of high intensity sheeting (FF 675, 678, 682, 686). Respondents' product offerings include both temporary and durable types of sheeting, as does complainant's, and their offerings are otherwise highly similar in sizes and colors, etc., to that of complainant (FF 691, 692). Complainant's and respondents' sales of high intensity product are both made through the similar channels of trade to government agencies through competitive bidding, and additionally through sales to private contractors (FF 677, 678, 687-690, 694). In promotional mailings to the trade respondents have emphasized that

it is now an alternate source of supply to complainant for high intensity product for reflective road signs, exclaiming that it has brought the advantages of price competition to the market (FF 698, 699).

Retroreflective types of sheeting do include products other than the high intensity grade reflective sheeting at issue, such as engineer grade and super engineering grade reflective sheeting. However, while such products are similarly for traffic sign applications, there are substantial differences in product performance between high intensity and lesser grade sheeting, and there has been a market shift towards greater use of high intensity material, as well as a substantial price premium for high intensity material versus these other grades of sheeting. Respondents' expensive development efforts for high intensity product manufacture were made after their development of their engineering and super engineering grade sheetings, further confirming that such sheeting is not an equivalent substitute for high intensity product (FF 689, 700-709). As such, higher intensity sheeting is without equivalent economic substitutes on the market, and causation is not complicated by the presence of substitutes for the product under investigation. See, Certain Convertible Rowing Exercisers, Inv. No. 337-TA-212 (unreviewed issue of ID 1985) at 259-260,281-283 (while convertible rowing exercisers generally competed with various exercisers and rowing exercisers, such exercisers were not established substitutes for the product under investigation and did not affect causation, noting an increase in sales and popularity of convertible exercisers).

Respondents cite the decisions of the Court of Appeals and the Commission in several other investigations in support of their contnention that there is no substantial economic injury in this investigation, including Corning Glass,

Textron, Drill Point Screws and Spring Assemblies. (RPF at 158-160). A fundamental distinction places those decisions apart from the situation under investigation here. Thus the Commission has consistently held that a showing of injury is more complicated where there are non-infringing economic substitutes, or non-imported substitutes, in the competitive market for the product under investigation, since it cannot then be assumed (without direct proof thereof) that any injurious effects have been caused by the infringing imports rather than by the substitutes. Certain Drill Point Screws, USITC Pub. No. 1365 at 20 (1982); Certain Optical Waveguide Fibers, Inv. No. 337-TA-189 at 103-105 (unreviewed ID 1985), affd. sub nom. Corning Glass Works v. International Trade Commission; Certain Vertical Milling Machines, 223 U.S.P.Q. 332, 348 (Comm. 1984) at n. 149, affd. sub nom., Textron Inc. v. U.S. International Trade Commission, 753 F.2d 1019 (Fed. Cir. 1985); Certain Electromagnetic Flowmeters, Inv. No. 337-TA-230 (Comm. 1986) at 7, affd. sub nom., Fischer & Porter v. U.S. International Trade Commission, 4 U.S.P.Q 2d 1700 (Fed. Cir. 1987). Where causation is complicated by the presence of other substitutes, the Commission has required direct evidence of causation, including evidence of substantial direct lost sales and market share shifts. However the Commission has not receded from its test of injury that, absent such substitutes, injury is usually shown when:

> an infringer holds a significant share of the domestic market for the articles covered by the patent or... the infringer has made a significant amount of domestic sales of the covered articles, as such sales rightfully belong only to the patentee (and/or any licensees). In re Spring Assemblies, 216 USPQ 225, 243 (Comm. 1981).

In this investigation, the administrative law judge finds that there is no showing of such substitutes sufficient to complicate causation, and also that there is ample evidence of direct competition only between respondents and complainant's high intensity grade products.

Respondents additionally rely on language from the Court of Apeals' decision in Akzo, N.V. v. U.S. International Trade Commission, supra, affirming, Certain Aramid Fibers, Inv. No. 337-TA-194 (1985). Aramid Fibers found no injurious effect where respondents' actual imports had been only in sample quanitities made for the purpose of obtaining customer approval, and were not sold to supplant the complainant's commercial quantity sales to U.S. customers. In contrast, in this investigation respondents' sales have been in far more than sample quantities and have been commercially competitive with complainant's high intensity product sales.

The record does establish that complainant has enjoyed increasing sales and profits on the sales of high intensity sheeting, with increased profits attributed to complainant's recent investments which increased productivity (FF 670, 672-674). However, the administrative law judge finds that respondents hold a significant share of approximately of the total domestic market for high intensity grade product and % of the domestic high intensity sheeting sales, and that respondents' sales levels are relatively significant in the market and not de minimis in amount or effect (FF 673, 674).

The substantial level of respondents' level of sales is confirmed by the relative amount of revenue and profit that such sales would entail if made by complainant pursuant to its exclusive marketing rights. Thus such sales would have added to already substantial annualized profit for complainant in 1987 (FF 676). The of respondents' 1987 sales from full year 1986 sales (FF 672) further evidences this

portions of an expanding market. See, Certain Exercising Devices, Inv. No. 337-TA-24 (adopted RD 1976) at 23. Upon the evidence of record of exclusive direct competition and complainant's ample ability to satisfy demand, the administrative law judge finds that the sales made by respondents are sales thereby lost to the domestic industry.

Additionally, respondents' significant level of competition has resulted in a substantial number of government bid awards lost by complainant to respondents. The record shows that approximately % of respondents' sales revenue resulted from these sales to government agencies won from complainant (FF 678). Complainant also was forced to match respondents' offered prices and lower its own prices to win sales on approximtely specific orders it received for durable type high intensity sheeting (FF 682). Specified lost sales and price matching/reduction revenue together resulted in approximately $ in lost profit to complainant, or a lose of an added approximately % to complainant's profits (FF 685). The evidence of specifically identified lost sales presented is limited to government bid awards which is typically associated only with durable type sheeting. Government bidding is not associated only with the temporary type sheeting which respondents have sold to private contractors. Evidence of specific price matching is also from durable sheeting sales (FF 678, 682, 690).

then the evidence of record demonstrating extensive direct competition between complainant and respondents' high intensity sheeting shows that specifically identified lost sales clearly do understate total lost sales revenue (FF 678, 695).

In addition to specific price matching/reductions caused by respondents' competition, complainant has also been forced to reduce its list price levels

by 10% for work zone or temporary type high intensity sheeting sales (FF 684). The effect of respondents' sales in depressing prices evidences the significant economic effect of its level of sales in the market. Evidence of significant underselling in price (FF 678, 682, 744) further supports the conclusion of the effect of the imports to add market share which the domestic industry would otherwise have occupied. Specific evidence of the effect of respondents' sales upon complainant's operations distinguish the situation under investigation from that in Certain Combination Locks, Inv. No. 337-TA-45 (Comm. 1979).

The fact that complainant has not sufferred from generally poor economic performance, but has had sustained and increasing profitability and increasing high intensity sheeting sales, does not under the circumstances detract from the economic harm posed by respondents' sales, but for which complainant demonstrably would have enjoyed the fruits of substantially higher sales and profits through the sales revenue enjoyed by respondents. See, Akzo, 1 USPQ2d at 1251 (profitability does not defeat future injury). The recent expansion in the market for high intensity product has resulted in increased total sales for the product, as well as expansion in sales and revenue to complainant; that expansion has made the competitive economic injury one of actually felt economic diversions which are nevertheless substantial in degree.

A foundation of the injury determination under section 337 is whether there has been a loss or diversion of sales from the domestic industry to respondents, Bally/Midway Mfg. Co. v. U.S. International Trade Commission, 219 U.S.P.Q. 97, 102 (Fed. Cir. 1983); In re Von Clemm, 229 F.2d 441, 445, 108 U.S.P.Q. 371, 374 (CCPA 1955). Since lost sales can occur in a significantly

expanding market in which they can result in a diversion of a substantial piece of a market expansion, actual declines in sales and profitability are not necessarily required for an industry to experience injury under section 337. The Commission has recently again stated that the level of any specific factor traditionally considered in a determination of economic injury (which includes profits and sales levels) is not dispositive of a finding of injury or no injury, and that the special characteristics of each industry must be assessed. Certain DRAMS, Inv. No. 337-TA-242 (Comm. 1987) at 76. It is noted that the Commission has found substantial injury in the particular fact situations of other investigations involving industries with increasing sales and substantial profits. In re Reclosable Plastic Bags, 192 U.S.P.Q. 674 (Comm. 1977)(during the period of importation the domestic industry enjoyed overall increased sales, with import levels of 1.5 percent of total U.S. production); Certain Surveying Devices, 208 U.S.P.Q 36 (Comm. 1980)(during the period of importation the domestic industry had increased sales, with its biggest sales gain after importation began, and with respondents' market share once at 5%, though since declined); Certain Crankpin Grinders, Inv. No. 337-TA-60 (Comm. 1979) at 16; In re Electronic Pianos, Inv. No. 337-31 (Comm. 1975); see Certain Aramid Fiber, Inv. No. 337-TA-194 (ID May 1985)(future injury found despite substantial forecast expansion in domestic market and sales).

Based on the foregoing, the administrative law judge finds that complainant has established substantial competitive economic harm from the import and sale of respondents' "Ultralite" high intensity sheeting. Respondents' contention that a finding of injury in this investigation would result in reading out the injury requirement from section 337 investigations involving patents ignores section 337's emphasis on significant lost and

displaced sales, and ignores the fact that by the terms of the statute "substantial injury" does not necessitate destroying the industry before a violation can be found. The substantial economic harm found by the administrative law judge in this investigation does involve a competitive taking of substantial economic benefits from further substantial sales expansion to which complainant, by virtue of its intellectual property rights, was exclusively entitled. Injury under section 337 includes an actual deprivation of benefits, as well as suffering declines. See, Certain Roller Units, 208 U.S.P.Q 141, 144 (Comm. 1979) (lost potential sales cited as basis for injurious effect).

VI. Future Injury

Tendency to substantially injure a domestic industry requires a showing of particular factual circumstances from which probable future injury can reasonably be inferred. Corning Glass v. U.S. International Trade Commission, 779 F.2d 1565, 230 U.S.P.Q. at 828. Circumstances relevant to a finding of injury include foreign excess production capacity, ability to undersell the domestic industry, and the intent and ability to export and penetrate the U.S. market. Certain Methods for Extruding Plastic Tubing, 218 USPQ 348 (Comm. 1982). Where past injury from infringing imports is not shown, proof of future injury must involve a reasonable likelihood of a future increase in imports sufficient to cause injury, or other proof of probable future change in circumstances sufficient to cause injury. Fischer & Porter Co. v. U.S. International Trade Commission, supra.

The administrative law judge determines that likely future injury has been shown from respondents' importation of high intensity sheeting.

The record establishes that respondents' production capacity greatly exceeds their current import levels of high intensity type sheeting, with respondents currently operating at about 30% of their production capacity (FF 710-712). Also respondents have increased their production capacity annually from 1984 on with their start-up of manufacture in Japan (FF 710). In addition respondents have made substantial investments in product developments and capital expenditures for manufacture of their Ultralite sheeting (FF 714, 715). While respondents' point to their sales outside the United States, still their current excess capacity as well as the projections of greater U.S. market growth than that in other markets indicates an ability to substantially increase their U.S. imports. U.S. sales of "Ultralite" were about 29% of worldwide annual sales in 1986, with mid-year 1987 sales 57% of worldwide sales (FF 716, 723). No specific levels of commitments to respondents' non-U.S. markets has been shown. Since allocation of "Ultralite" between the United States and other markets is decided by respondents, respondents plainly could allocate sales to the larger U.S. market, rather than going to other markets (FF 718). The respondents' domestic inventory levels also support a near term ability to increase sales (FF 722).

Respondents' intent and ability to export is shown by their investments detailed above in product manufacture, by their establishment of U.S. salesman and sales representative companies (FF 730-731), by the promotion of the "Ultralite" product at six domestic trade shows from 1985 through 1987 (FF 734), and by their expenditures for promotion and domestic distribution of 10 thousand square feet of sheeting on a promotional basis (FF 735). Respondents are currently promoting "Ultralite" in all fifty states and their goal is to make sales throughout the country (FF 727, 729). Respondents'

July, 1986 forecasts for their furture U.S. sales show an intent to future sales of "Ultralite" in the United States (FF 723). More near term forecasts for 1988 additionally show

(FF 724-725).

State approval is generally required for significant domestic marketing of high intensity sheeting (FF 696).

Respondents have almost without exception bid prices lower than complainant in head to head bidding for state and local government agency supply contract awards (FF 678).

competition of engineer grade product manufactured by respondents which is similarly reflective sheeting for sign applications, and is subjected to the same bidding process, competitive bidding on high intensity sheeting sales will depress prices for the product due to underselling (FF 748-751).

For the foregoing reasons, the administrative law judge finds that complainant has established that there are economic circumstances which indicate a likelihood of future injury to the domestic industry by reason of respondents' imports of high intensity type sheeting.

FINDINGS OF FACT

I. Jurisdiction

1. The Commission has subject matter jurisdiction and in rem jurisdiction. as admitted by respondents (RPF1).

2. Service of the complaint and notice of the investigation was made on the respondents.

3. The respondents have actively participated in the investigation.

4. The Commission has in personam jurisdiction over the respondents.

II. Parties and Products in Issue

Complainant

5. Complainant, Minnesota Minning and Manufacturing Company (3M) is a Delaware corporation with its principal place of business in St. Paul, Minnesota (Complaint, paragraph 4).

Respondents

6. Respondents are Seibu Polymer Chemical Industry Co. Ltd. of Tokyo, Japan and Seibulite International, Inc. of Rancho Dominguez, California (Complaint, paragraph 41 and 42; Response to Complaint paragraphs 41 and 42).

7. The respondents, in answer to the staff's Interrogatory No. 1 which read:

> Set forth the name, address and telephone number state or if outside the United States, country and incorporation and your principal place of business,

answered:

Seibulite International Inc.
2-5-26 Kami-Ikobukuro, Toshima-Ku, Japan
Telephone No.: (03) 940-9146
Incorporated in Japan.
Principal place of business: Tokyo, Japan.

Seibulite International Inc.
3136 E. Victoria St., Rancho Dominguez, CA 90221
Telephone No.: (213) 632-7500
Branch office of Seibulite International Inc.

Seibu Polymer Chemical Co., Ltd.
2-5-26 Kami-Ikebukuro, Toshima-Ku, Tokyo, Japan
Telephone No.: (03) 940-9111

Seibu Polymer Chemical Industry Co., Ltd.
2-5-26 Kami-Ikebukuro, Toshima-Ku, Tokyo, Japan
Incorporated in Japan.
Principal place of business: Tokyo, Japan.

(CX-124)

8. The products which are the subject of this investigation are known as retroreflective sheeting of the encapsulated or cellular lens type. Complainant's encapsulated-lens sheeting is referred to as "high intensity" grade sheeting. Respondents' encapsulated lens sheeting is referred to as "Ultralite" grade sheeting (Richelsen CX-17 at 5, Kobayashi RX-35 at 13; CX-1).

9. Retroreflective sheeting, including the encapsulated-lens type, is incorporated in highway signs for bright illumination. Retroreflective sheeting, also often referred to simply as reflective sheeting, returns an incident beam of light back toward the source even though the incident light strikes the sheeting at an angle other than perpendicular to the sheeting. Such sheeting differs from a mirror-type reflector which reflects light at an angle equal but opposite to the incident light. Light from the headlamps of a vehicle which illuminates a traffic sign covered with retroreflective sheeting is returned brightly back toward the vehicle due to a layer of small diameter

glass beads. The glass beads function as minute lenses, which focus incident light beams onto a light-reflective surface, such as vapor-coated aluminum, behind the beads. The beads are supported in a polymeric material and the exact relationship between the beads and the light-reflective surface in back of the beads varies, depending on the type of retroreflective sheeting (Richelsen CX-17 at 2-3).

III. The '159 Patent

10. On May 24, 1977 the '159 patent titled "Cellular Retroreflective Sheeting" issued to Joseph M. McGrath. The patent is assigned to complainant. It is based on application Ser. No. 658,284 filed February 17, 1976. The patent contains fifteen claims (CX-1; CX-76).

11. Independent claim 1 and dependent claims 3, 4, 5 and 7 of the '159 patent, the only claims in issue, read:

> 1. Retroreflective sheeting comprising (1) a base sheet having a layer of retroreflective elements disposed over one of its surfaces; (2) a cover sheet disposed in spaced relation from the layer of retroreflective elements; and (3) a network of narrow intersecting bonds extending between said cover sheet and base sheet and comprising binder material thermoformed at the point of contact between said bonds and at least one of said cover sheet and base sheet so as to adhere the two sheets together and form a plurality of cells within which retroreflective elements are hermetically sealed; characterized in that the binder material is selected from materials that show increased adhesion to said at least one of the cover sheet and base sheet when a solid layer of the material that has been previously laminated to said sheet is cured, and further characterized in that the binder material is cured in situ after being thermoformed, whereby the bonds have increased bond strength to the cover sheet and base sheet.
>
> 3. Sheeting of claim 1 in which said cured binder material comprises an acrylic-based ingredient.

4. Sheeting of claim 3 in which the cover sheet also comprises an acrylic-based ingredient.

5. Sheeting of claim 4 in which the acrylic-based ingredient is polymethylmethacrylate.

7. Sheeting of claim 1 in which said retroreflective elements comprise transparent microspheres.

Dependent claims 2, 6 and 15, not in issue, read:

2. Sheeting of claim 1 in which the curing of said binder material is induced with an electron beam.

6. Sheeting of claim 1 in which the cover sheet includes ingredients that coreact with said binder material during curing of the binder material.

15. Sheeting of claim 11 in which the cover film includes ingredients that coreact with said bonds during curing of the bonds.

12. Under the subheading "Background of the Invention", the '159 patent states:

The present invention is first of all an advance in the art of film-covered, exposed-lens retroreflective sheeting such as taught in McKenzie, U.S. Pat. No. 3,190,178. Such sheeting, which offers the brightest retroreflection of any known retroreflective sheeting made from glass microspheres, comprises (1) a base sheet in which a dense monolayer of transparant microspheres is partially embedded and partially exposed, with a specular reflective metal layer underlying the embedded surfaces of the microspheres, (2) a transparent cover film disposed in spaced relation above the layer of microspheres, and (3) a network of narrow, intersecting polymer-based bonds that extend over the surface of the base sheet to adhere the base sheet and cover film together and to divide the space between the base sheet and cover film into hermetically sealed cells or pockets in which the microspheres have an air interface. This "exposed-lens" construction (that is, with the microspheres having an air interface) is responsible for the bright retroreflection provided by such sheeting.

A special challenge with such sheeting is to obtain lasting bonds between the cover film and base sheet. The bonds in existing commercial sheeting have been susceptible to largely two kinds of disruption: (1) disruption caused by the heat and pressure used to apply reflective sheeting to a base substrate such as a traffic sign blank, and (2)

disruption caused by outdoor weathering, including extremes of temperature cycling; rain, snow, ice and other forms of precipitation or moisture; and sunlight. Upon failure of the bonds, moisture can cover the exposed faces of the microspheres, whereupon the microspheres do not focus light rays onto the specular reflective layer on the back of the microspheres as they otherwise would, and retroreflection is very greatly reduced. The utility of film-covered exposed-lens retroreflective sheeting would be greatly expanded if some way were found to provide bonds of greater durability.

(CX-1, col. 1, lines 5-43).

13. Under the subheading "Summary of the Invention", the '159 patent teaches:

> ...[R]etroreflective sheeting of the present invention incorporates a network of bonds, which are initially thermoformed into sealing contact between the cover film and base sheet, but which are subsequently cured in situ after the thermoforming operation. Preferably the bonds are initially formed by the procedure described in McKenzie, U.S. Pat. No. 3,190,178, namely by displacing binder material either from the base sheet into contact with the cover film (in "exposed-lens" varieties) or from the cover film into contact with the base sheet (in cube-corner varieties).

(CX-1, lines 61-68, col. 2, lines 1-3).

14. The '159 patent teaches:

> Prior to displacement, the binder material is generally a room-temperature-solid that may be controllably thermoformed to from a hermetic seal. In areas subjected to heat and pressure, the binder material flows into contact with the surface against which it is pressed (i.e. cover film or base sheet); and then, after removal of heat and pressure, returns to a self-sustaining form. (By "thermoforming" it is meant that a material is subjected to heat and usually pressure so as to cause it to flow into good contact with a substrate, i.e. "wet" the substrate, and then retain the shape into which it has been formed after removal of heat and pressure.) While in that self-sustaining form, the binder material is cured in situ ("curing" is used herein to describe chemical reactions of constituent ingredients, such as cross-linking or chain-extension reactions, which result in relative insolubility and infusibility of the cured material).

Generally the curing is initiated by subjecting the sheeting to radiation-such as electron beam, ultraviolet, nuclear, or microwave--which typically activates one or more ingredients in the binder material, whereupon chemical reaction follows.

Greatly improved results are achieved by the use of such cured bonds. Sheeting of the invention can be laminated to a substrate such as a sign board with much greater latitude in heat and pressure than with existing commercial products, thus making the lamination operation more convenient and rapid and minimizing wastage. Further, in outdoor weathering tests at test sites, sheeting of the invention has demonstrated a higher resistance to degradation than existing film-covered exposed-lens products.

The invention also permits greater latitude during manufacture, since the initial thermoforming can often be performed more easily, because of the presence of low-molecular-weight curable ingredients; and it is not necessary to fully depend on the thermoforming to obtain a lasting hermetic seal.

The reasons for the improvement in results are not fully understood. It is recognized that a cured or cross-linked material may exhibit improved internal strength properties. But the present bonds do more than that, since they have improved adhesion to the cover film. In some embodiments of the invention, for example, the cover film can be pulled away from the bonds intact before the bonds are cured, and in some cases be visibly free of bond material, while it cannot be pulled away in that manner after curing.

While not limiting ourselves to a particular mechanism, it is theorized that when the bonds are first formed under heat and pressure, some of the bond material migrates into the cover film .... Upon the later curing of the bond the migrated material may become more firmly interlocked or intertwined with the molecular structure of the cover film to achieve greater resistance to a pulling apart of the cover film and base sheet material.

In addition, under certain curing conditions such as curing induced by electron-beam or ultraviolet radiation, and in certain embodiments of sheeting, a minor amount of chemical reaction may occur between the cover film (or base sheet) and the bond; for example, the radiation may cause loss of hydrogen atoms from the material of the cover film (or base sheet), whereupon that material reacts with a reactive site, such as unsaturation, in the material of the bond.

But whatever the explanation, the improved adherence between the cover sheet and base sheet provides a significant advance in cellular retroreflective sheeting.

(CX-1, col. 2, lines 4-68, col. 3, lines 1-4).

15. FIGS. 1, 2 and 3 of the '159 patent under the subheading "Description of the Drawings" are described as follows:

FIG. 1 is a top view of a portion of exposed-lens cellular retroreflective sheeting of the invention;

FIG. 2 is an enlarged schematic sectional view of apparatus and sheet components in the course of manufacture of exposed-lens cellular retroreflective sheeting of the invention;

FIG. 3 is a cross-sectional view of a portion of completed exposed-lens cellular retroreflective sheeting of the invention;

(CX-1, col. 3, lines 7-16).

16. FIGS. 1, 2 and 3 of the '159 patent are as follows:

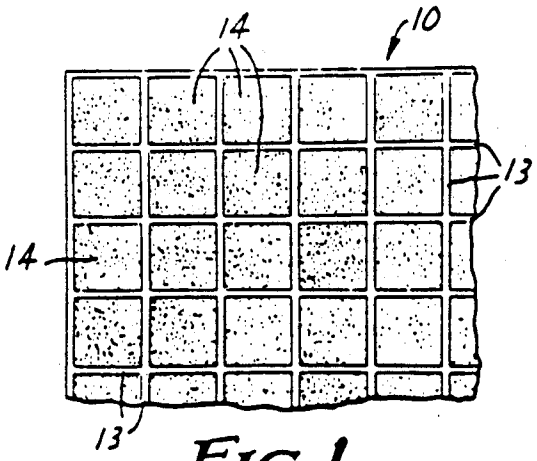

FIG. 1

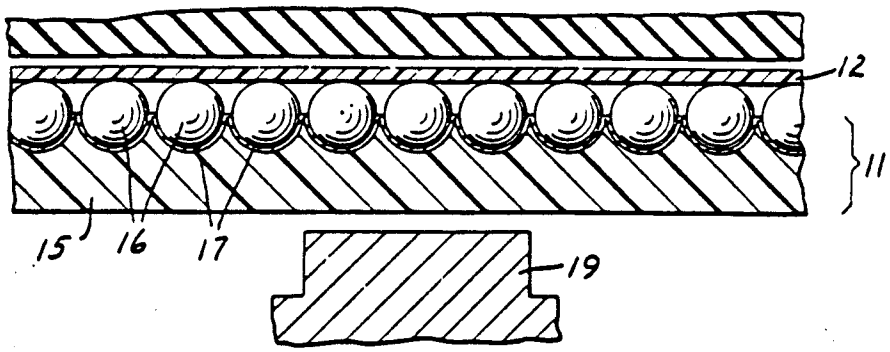

FIG. 2

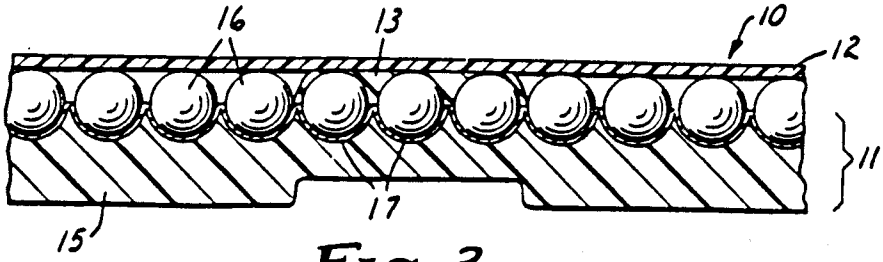

FIG. 3

17. In the '159 patent under the subheading "Detailed Description", the '159 patent refers to FIGS 1 to 3 and states:

> As shown in FIGS. 1 and 3, a representative exposed-lens retroreflective sheeting 10 of the invention comprises a base sheet 11, a transparent cover sheet or film 12, and narrow intersecting bonds 13 which attach the base sheet and cover film together and separate the space between them into hermetically sealed cells or pockets 14.
>
> As shown in FIGS. 2 and 3, the base sheet 11 typically includes a support layer 15 of binder material, a monolayer of transparent microspheres 16, which are partially embedded in the support layer and partially exposed above the support layer, and specular light-reflecting means underlying and in optical connection with the embedded surface of the microspheres. In the illustrated sheeting of the invention, the specular reflective means comprises specular reflective material 17, such as metal or such as dielectric material as described in Bingham, U.S. Pat. No. 3,700,305, coated onto the embedded surface of the microspheres, as by vapor-deposition. ....
>
> A base sheet material 11 or 11' as illustrated in FIGS. 3 and 4 can be prepared by procedures well known in the art, such as described for example in McKenzie, U.S. Pat. No. 3,190,178. The assembly of cover film 12 and base sheet 11 may then be pressed, as also described in the McKenzie patent, by inserting the two sheets between a pair of heated platens. One platen is an embossing platen having a pattern of raised ridges (represented by 19 in FIG. 2). The ridges on the embossing platen press against the base sheet material 11 to deform the support layer 15 onto the configuration shown in FIG. 3. The support layer is heated and pressed sufficiently so that it floods the microspheres in the area pressed and contacts the cover film 12. The pattern of ridges on the embossing platen is such as to form the network of narrow bonds illustrated in FIG. 1....
>
> Following the embossing operation, the cover film 12 continues to be in spaced relation with the microspheres 16. Very little spacing, as thin as a monomolecular layer of air, for example, provides the necessary air interface to obtain desired optical effects. Following the embossing operation, the sheet material has the desired hermetec

> cells covered by a cover film, and surrounded on all borders by a polymer-based bond.
>
> To complete retroreflective sheeting of the invention, the embossed sheeting is then exposed to a predetermined level of radiation, which causes the binder material 15 to cure to a relatively infusible and insoluble condition. Rapidly acting forms of radiation, i.e. requiring application for less than 5 minutes and preferably for less than 5 seconds, are strongly preferred for reasons of economy as well as to minimize handling of the product while the bonds are at less than finished strength. Electron-beam radiation is especially desired because of its ability to penetrate even heavily pigmented coatings, its speed and efficient use of applied energy, and its ease of control. Other useful forms of radiation include ultraviolet light, nuclear radiation; microwave radiation; and heat, though at present heat radiation requires unpreferred long times of application.

(CX-1, col. 3, lines 23-67, col. 4, lines 1-25).

18. In FIG. 1 the peripheral white lines around each square is the binding area holding the sheet material to the rest of the construction. Inside the square there is no binding area. Glass beads are inside the square (Bingham Tr. at 151, 152).

19. With respect to binder materials that used in the invention of the '159 patent, the patent as well as the original specification as file in the Patent Office on February 17, 1976 teaches:

> Binder materials that will undergo curing under radiation are well known in the art. Materials useful in the present invention are typically room-temperature-solids that will soften to a flowable state when heated to temperatures between about 25° and 150° C. Under pressure of an embossing platen the binder material flows sufficiently to wet the cover film and to flood the microspheres in the area pressed, but it does not flow significantly into areas that are not pressed, and thereby leaves the described cell or pocket of exposed microspheres. Further, once the heat and pressure are removed, the binder material will hold its thermoformed shape.

The described binder material includes one or more ingredients that are activated in the presence of the described radiation (as by formation of free radicals through loss or transfer of hydrogen atoms or decomposition of initiator molecules). The activated molecules then react with an active site, such as double bond, on another molecule to start a polymer chain or initiate crosslinking. In some cases, the binder material comprises a polymeric matrix material and a monomer, which is the ingredient principally activated by the radiation. The polymeric matrix material may or may not participate in the reaction, for example, through the presence of preradiation reactive groups or because of activation of the polymer molecule as by loss of hydrogen atoms. In other cases, the binder material may consist only of polymeric material having groups that are activated by radiation and also, perhaps, containing preradiation reactive groups.

Acrylic-based ingredients are especially useful binder materials ("acrylic-based ingredients" as used herein means acrylic or methacrylic acid or ingredients obtained from acrylic or methacrylic acid). Typical useful acrylic-based monomers are polyethylene glycol diacrylates; 1-6-hexanediol diacrylate; hydroxymethyl diacetone acrylamide; and 2-cyanoethyl acrylate; and typical acrylic-based polymeric materials are acrylate or methylacrylate polymers or copolymers. Other useful binder materials are represented by diallyl glycol carbonate; and saturated or unsaturated polyester or polyurethane resins.

Compositions that cure in the presence of ultraviolet radiation typically include a sensitizer such as a benzoin ether or a benzophenone derivative in addition to a reactive monomer and a polymeric binder material. Catalysts for initiating curing in the presence of either thermal or microwave radiation include peroxides such as benzoyl peroxide and azo compounds such as azobisisobutyronitrile.

An especially useful transparent cover film comprises polymethylmethacrylate, which maintains its clarity and other properties very well under outdoor weathering conditions. Polycarbonate films are also useful, and especially where outdoor durability is not important, films such as polyethylene terephthalate, cellulose acetate, and cellulose acetate butyrate may be used. The cover films are typically between about 1 and 5 mils in thickness, though they may have other thickness also. In addition to thermoplastic cover films as described, cover films that will undergo reaction both internally and with the material

of the bonds may be used.

One surprising aspect of the invention is the fact that some binder materials do not provide improved bonds to all types of materials. For example, the acrylic binder materials as used in the examples do not form a bond to the polyethylene terephthalate carrier sheet on which they are carried. Useful films and binder materials can be selected by the razor blade test reported in Example 1.

(CX-1, col. 4, lines 26-68, col. 5, lines 1-28; CX-2 at 8 to 10).

20. The '159 patent contains fourteen examples which were identical to the fourteen examples in the '159 patent application as originally filed. Example 1 prepares a radiation-curable composition by mixing the following ingredients:

	Parts by Weight
Copolymer including 45 percent ethyl acrylate and 55 percent methyl methacrylate dissolved in xylene to give a 37.6 percent solids solution	164.9
Polyethylene glycol (200) diacrylate	19.0
Rutile titanium dioxide pigment	18.5
Stearic acid	0.5

Example 1 continues:

This composition is knife-coated over the vapor-coated glass microspheres in the polyethylene-coated web, after which most of the solvent from the composition is removed by heating the web in an oven. The result is a support layer 15 as shown in FIG. 2 about 60 micrometers thick. A polyethylene terephthalate film having a pressure-sensitive adhesive layer on one surface is then laminated to the radiation-curable support layer by passing the web and film through a set of pressure rollers, with the adhesive side against the support layer.

The polyethylene-covered paper is then stripped away, leaving a base sheet material 11 as shown in FIG. 2. This base sheet material and a biaxially oriented polymethyl methacrylate film 75 micrometers thick are inserted together in the manner shown in FIG. 2 between two platens, one being smooth-surfaced and the other being a steel

> platen having a pattern of 0.75-millimeter-high, 0.25-millimeter-wide ridges and heated to 150° C. This operation laminates the cover film to the base sheet by a network of bonds as illustrated in FIGS. 1 and 3. The resulting sheeting is then irradiated with a 190-kilovolt electron beam to give a dosage of 1.5 megarads.
>
> To illustrate the improved bond obtained by use of the cured binder material, the following comparison may be made: A 0.6 millimeter-thick film was prepared by knife-coating the radiation-curable composition described above onto a silicone-treated release paper and then oven-drying the coating. Two sections were cut from this film, removed from the liner, and each laminated under 250 pounds per square inch (111.7×10^6 newton per square meter) at 220°F (105° C) to a cast polymethylmethacrylate sheet using a smooth-surfaced platen press. One of the samples was then irradiated with a 190-kilovolt electron beam to a dose of 1.5 megarads, after which the adhesion between each sample of the film and the polymethylmethacrylate was checked by attempting to separate them with a single-edged razor blade. The uncured film could be easily removed, but the irradiated film was very tightly bound and could not be cleanly separated from the polymethylmethacrylate sheet.

(CX-1, col. 6, lines 28-68, col. 7, lines 1-22; CX-2).

21. The radiation-curable composition of Example 2 of the '159 patent was prepared from the following ingredients:

	Parts by Weight
Terpolymer including 52.5 percent methyl methacrylate, 43 percent ethyl acrylate, and 4.5 percent isooctyl acrylate dissolved in xylene at 33.3 percent solids	150
Polyethylene glycol (200) diacrylate	33
Rutile titanium dioxide pigment	42
Stearic acid	0.45

Curing the composition is done with an electron beam. Thereafter square samples of both irradiated sheeting and sheeting that had not been irradiated were mounted on aluminum panels for heat-shrunk testing. It is said that:

> After 30 minutes at 200° F, the cover film of the uncured sheeting had shrunk, but the irradiated sheeting showed no shrinkage. After 20 hours at 200°F (93° C), the cover film of the uncured sheeting had shrunk severely and was almost

completely delaminated from the base sheeting. The irradiated sheeting showed only slight shrinkage and delamination after 20 hours at 200°F (93° C).

(CX-1, col. 7, lines 25-49).

22. The radiation-curable composition of Example 3 of the '159 patent was prepared from the following ingredients:

	Parts by Weight
Copolymer including 45 percent ethyl acrylate and 55 percent methyl methacrylate dissolved in 2-ethoxyethyl acetate to give a 29.9-percent-solids solution	200.7
1.6-hexanediol diacrylate	21.0
Rutile titanium dioxide pigment	18.7
Stearic acid	0.3

It is said that:

> Following the embossing operation, the sheeting was irradiated with a 190-kilovolt electron beam to give a 1.5 megarad dose to provide a firmly bonded cover film.

(CX-1, col. 7, lines 53-68).

23. The radiation-curable composition of Example 4 of the '159 patent was prepared from the following ingredients:

	Parts by Weight
Terpolymer including 52.5 percent methyl methacrylate, 43 percent ethyl acrylate, and 4.5 percent isooctyl acrylate dissolved in xylene at 43.9 percent solids	141.2
Polyethylene glycol (200) diacrylate	19.0
Stearic acid	0.5
Benzoin ethyl ether	2.0

It was stated that:

> Following the embossing operation, the sheeting was irradiated with ultraviolet light using two passes at 50 feet per minute (15 meters per minute) with two 200 watt per inch (80 watt per centimeter) medium-pressure mercury lamps in a PPG Radiation Polymer Company Model QC 1202 N/A

ultraviolet light processor and a reflective sheeting having a firmly bonded cover sheet resulted.

(CX-1, col. 8, lines 1-22).

24. The radiation-curable composition of Example 5 of the '159 patent was prepared from the following ingredients:

	Parts by Weight
Linear saturated polyester resin (Vitel PE 222 supplied by Goodyear Chemicals)	160.0
Diallyl glycol carbonate ("CR-39" supplied by PPG Industries)	40.0
Methyl ethyl ketone	100.0
Xylene	40.0

It was then said:

> Two kinds of retroreflective sheeting were prepared, one using an oriented 75-micrometer-thick polymethylmethacrylate top film and the other using a 75-micrometer-thick polycarbonate film ("Lexan" supplied by General Electric). These products were subjected to 5 megarad and 25 megarad doses, respectively, of 190-kilovolt electron beams. Retroreflective sheeting having a firmly bonded cover film was prepared in both cases.

(CX-1, col. 8, lines 25-46).

25. The radiation-curable composition of Example 6 of the '159 patent was prepared from the following ingredients:

	Parts by Weight
Copolymer including 70 percent methyl methacrylate and 30 percent octyl acrylate	50.0
Polyethylene glycol (200) diacrylate	35.0
2-hydroxyethyl acrylate	15.0

It was then said:

> This composition, which, as noted, includes no solvent, was knife-coated while warm over a web comprising glass microspheres vapor-coated with aluminum and partially embedded in a polyethylene film on a paper carrier. A

polyethylene terephthalate film carrying a layer of pressure-sensitive adhesive was laminated to the resulting support layer and the paper carrier for the polyethylene film removed. The polyethylene film was removed while the web was subjected to a temperature of about -40°C. The resulting base sheet was pressed together with an oriented polymethyl methacrylate film, between a rubber platen and a ridged heated steel platen, after which the resulting sheeting was irradiated with a 190-kilovolt electron beam to a dosage of 2.5 megarads. Satisfactory retroreflective sheeting having a firmly bonded cover film was prepared.

(CX-1, col. 8, lines 48-68, col. 9 lines 1-6).

26. The radiation-curable composition of Example 7 of the '159 patent was prepared from the following ingredients:

	Parts by Weight
Terpolymer consisting 52.5 percent methylmethacylate, 43 percent ethyl acrylate and 4.5 percent isooctyl acrylate dissolved in xylene to give a 43.9 percent solids solution	136.7
Polyethylene glycol (200) diacrylate	20.0
Rutile titanium dioxide pigment	18.0
Stearic acid	2.0
Xylene	40.0

The composition was used to make sheeting as made in Example 1 using a cover film of polycarbonate. Radiation of the embossed sheeting produced a sheeting with a firmly bonded cover film. (CX-1, col. 7, lines 9-30).

27. The radiation-curable composition of Example 8 of the '159 patent was prepared from the following ingredients:

	Parts by Weight
Copolymer consisting of 45 percent ethyl acrylate and 55 percent methyl methacrylate dissolved in 2-ethoxyethyl acetate/2-propanol to give a 32.4 percent solid solution	100
Hyrdoxymethyl diacetone acrylamide	5

This composition made satisfactory retroreflective sheeting in the manner described in Example 1 using a 170-kilovolt electron beam to give a 2.5

megarad dosage.

28. For Example 9 of the '159 patent, Example 8 was repeated except that 5 parts of 2 cyanoethyl acrylate was used instead of the hydroxymethyl diacetone acrylamide of Example 8 (CX-1, col. 9, lines 49-51).

29. In Example 10 of the '159 patent a radiation-curable composition was prepared from the following:

	Parts by Weight
Copolymer consisting of 45 percent ethyl acrylate and 55 percent methylmethacrylate dissolved in 2-ethoxyethyl acetate to give a 29.9 percent solids solution	200.7
Polyethylene glycol (200) diacrylate	21
Rutile titanium dioxide pigment	18.7
Stearic acid	0.3

After lamination with microshperes, embossing and irradiation a final product was obtained which was said to have improved seal-strength and heat-stability (CX-1, col. 10, lines 54-65, col. 11, lines 9-12).

30. Example 11 of the '159 patent reads:

Retroreflective sheeting was prepared from the following ingredients using the procedures given in Example 1:

	Parts by Weight
Terpolymer consisting 52.5 percent methylmethacylate, 43 percent ethyl acrylate and 4.5 percent isooctyl acrylate dissolved in xylene to give a 43.9 percent solids solution	136.7
Polyethylene glycol (200) diacrylate	20
2,2'-Azobis(2-methylpropionitrile)	4
Acetone	20

Biaxially oriented, 75-micrometer-thick polymethylmethacrylate film and 75-micrometer-thick polycarbonate film (Lexan supplied by General Electric)

> were used as cover films. The embossed sheeting was thermally cured by heating for 16 hours at 65° C. Either uncured sheeting construction required about 7×10^5 dynes per centimeter width (4 pounds per inch width to pull the cover film away from the base sheet. After the curing operation, a force of 21×10^5 dynes per centimeter width (12 pounds per inch width) was not sufficient to separate either cover film from the base sheet.

(CX-1, col. 10, lines 15-40).

31. In Example 12 of the '159 patent, Example 1 was repeated except that a variety of different radiation conditions were used and the following radiation-curable composition was used:

Composition	Parts by Weight
Terpolymer consisting of 52.5% methyl methacrylate 43% ethyl acrylate and 4.5% isooctyl acrylate dissolved in xylene to give a 43.9% solids solution	153.8
Polyethylene glycol (200) diacrylate	14.0
Rutile titanium dioxide pigment	18.0
Stearic acid	0.5
Xylene	50.0

In Example 12 after radiation with varied kilovolt beams was completed, the polyethylene terephthalate film was removed from each kind of sheeting, and a pressure-sensitive adhesive laminated to the exposed surface. Thereupon, 7.6-cm/sq. test samples were adhered to an aluminum sheet by the layer of adhesive. A control sample of sheeting prepared without any radiation and a sample of commercial sheeting made according to the McKenzie '178 patent were also made. The samples were then heated to 93°C (200°F) for 3 hours, which subjected the samples to shrinking forces that testes the strength by which the bonds held the cover film in place. After heating, the portion of the area of each sample that exhibited no shrinkage (i.e. was taut and unwrinkled)

was measured. Results were as follows:

TABLE I

Sample No	Back Radiation	Front Radiation	Unaffected Area (Percent)
Control	None	None	16
A	1.5 Mrad. 150 KV	None	66
B	1.5 Mrad. 160 KV	None	73
C	1.5 Mrad. 170 KV	None	72
D	1.5 Mrad. 180 KV	None	85
E	1.5 Mrad. 190 KV	None	85
F	None	1.5 Mrad. 190 KV	77
G	1.5 Mrad. 190 KV	1.5 Mrad. 190 KV	88
(Commercial sheeting made according to the McKenzie '178 patent)			13

These tests were said to indicate that for most purposes radiations of over 170 KV should be used, and that radiations of 180 or more are preferred as is use of combined front and back radiation (CX-1, col. 10, lines 42-68, col. 11, lines 1-28)

32. Example 13 of the '159 patent repeats Example 1 except that the following radiation-curable composition was used and the "cover film" was a flexible 250-micrometer-thick acrylic film having an array of minature cube-corner retroreflective elements 125 micrometers in depth embossed into one side:

Composition	Parts by Weight
Terpolymer consisting of 52.5% methyl methacrylate 43% ethyl acrylate and 4.5% isooctyl acrylate dissolved in xylene to give a 43.9% solids solution	1407
Polyethylene glycol (200) diacrylate	200
Rutile titanium dioxide pigment	179
Stearic acid	4.0
Xylene	500

The retroreflectivity of the sample was measured under various conditions (CX-1, col. 11, lines 48-67, col. 12, lines 1-10).

33. Example 14 of the '159 patent coats the radiation-curable composition used in Example 13 on 25-micrometer-thick polyethylene-terephthalate film and removes most of the solvent by heating the resulting web in an oven. The web was then heat-sealed to the flexible cube-corner film described in Example 13 to give a similar product except that it had no glass microspheres. This construction was cured from the back using a 190-kilovolt electron beam and a 1.5 megarad dose. The polethylene terephthalate carrier film was then removed and an adhesive and protective liner laminated to the back of the sheeting. Reflectivity measurements were then reported (CX-1, col. 12, lines 13-39).

IV. Prosecution of the '159 Patent

34. Serial No. 658,284 which resulted in the '159 patent had twenty-one original claims. Original claims 1 to 15 read:

> 1. Retroreflective sheeting comprising 1) a base sheet having a layer of retroreflective elements disposed over one of its surfaces; 2) a cover sheet disposed in spaced relation from the layer of retroreflective elements; and 3) a network of narrow intersecting bonds extending between said cover sheet and base sheet and comprising binder material thermoformed at the point of contact between said bonds and at least one of said cover sheet and base sheet so as to adhere the two sheets together and form a plurality of cells within which retroreflective elements are hermetically sealed; characterized in that the binder material is cured in situ after being thermoformed, whereby the bonds have increased bond strength to the cover sheet and base sheet.
>
> 2. Sheeting of claim 1 in which the curing of said binder material is induced with an electron beam.
>
> 3. Sheeting of claim 1 in which said cured binder material comprises an acrylic-based ingredient.

4. Sheeting of claim 3 in which the cover sheet also comprises an acrylic-based ingredient.

5. Sheeting of claim 4 in which the acrylic-based ingredient is polymethacrylate.

6. Sheeting of claim 1 in which the cover sheet includes ingredients that coreact with said binder material during curing of the binder material.

7. Sheeting of claim 1 in which said retroreflective elements comprise transparent microspheres.

8. Sheeting of claim 1 in which said retroreflective elements comprise cube-corner retroreflective elements.

9. Sheeting of claim 8 in which both the base sheet and cover sheet comprise radiation-curable material.

10. Retroreflective sheeting of claim 1 in which the surface of the cover film engaged by the bonds is configured to provided cube-corner retroreflective elements, and the layer of retroreflective elements disposed over a surface of the base sheet comprises transparent microspheres.

11. Retroreflective sheeting comprising 1) a base sheet that includes a support layer and a layer of transparent microspheres partially embedded in, and partially protruding out of, the support layer; 2) a transparent cover film disposed in spaced relation above the layer of microspheres; and 3) a network of narrow intersecting bonds comprising binder material thermoformed out of said support layer into sealing contact with the cover film so as to adhere the base sheet and cover film together and form a plurality of cells within which microspheres are hermetically sealed and have an air interface; characterized in that the binder material is cured in situ by exposure to an electron beam after being thermoformed into contact with the cover film, whereby the bonds have increased bond strength to the cover film.

12. Sheeting of claim 11 in which the cured binder material comprises an acrylic-based ingredient.

13. Sheeting of claim 12 in which the transparent cover film also comprises an acrylic-based ingredient.

14. Sheeting of claim 13 in which the acrylic-based ingredient is polymethylmethacrylate.

> 15. Sheeting of claim 11 in which the cover film includes ingredients that coreact with said bonds during curing of the bonds.

(CX-2 at 23 to 26).

35. In a first Patent Office action dated May 12, 1976, the Patent examiner rejected original claims 1, 3 to 10 under 35 USC 103 as obvious over Holmen et al. U.S. Patent No. 3,924,929. The Examiner stated:

> Holmen et al teaches the use of a retroreflecting sheet comprising a cellular cube corner means bonded by heat sealing, see column 4 lines 25-32. Heat sealing is obviously the structural equivalent of the thermo formed as claimed. Holmen et al see fig. 1 element 13, discloses wall members or serpta borders for cells that contain retroreflective cube corner elements that are disposed beneath a cover sheet that hermetically encapsulates an isolated plastic cell of polymethylmethacrylate. Holmen et al further teaches the use of a binder material that adheres to the encapsulated reflector. It would be obvious to one working in the art to cure a plastic retroreflective device "in situ" and to substitute microsphere reflectors for cube corner reflectors for only reasonable skill in the art would be required.

(CX-2 at 31 to 32).

36. In the first Patent Office action, the McKenzie '178 patent was cited as related art, the Examiner stating that McKenzie discloses the use of microspheres in a reflection device (CX-2 at 32).

37. In a response dated September 27, 1976, original claims 1 and 11 were amended as follows (underlined material was added to the original claims):

> 1. (Amended) Retroreflective sheeting comprising 1) a base sheet having a layer of retroreflective elements disposed over one of its surfaces; 2) a cover sheet disposed in spaced relation from the layer of retroreflective elements; and 3) a network of narrow intersecting bonds extending between said cover sheet and base sheet and comprising binder material thermoformed at the point of contact between said bonds and at least one of said cover sheet and base sheet so as to adhere the two sheets together and form a plurality of cells within which retroreflective elements

are hermetically sealed; characterized in that the binder material is selected from materials that show increased adhesion to the cover sheet when a solid layer of the material that has been previously laminated to the cover sheet is cured, and further characterized in that the binder material is cured in situ after being thermoformed, whereby the bonds have increased bond strength to the cover sheet and base sheet.

11. (Amended) Retroreflective sheeting comprising 1) a base sheet that includes a support layer and a layer of transparent microspheres partially embedded in, and partially protruding out of, the support layer; 2) a transparent cover film disposed in spaced relation above the layer of microspheres; and 3) a network of narrow intersecting bonds comprising binder material thermoformed out of said support layer into sealing contact with the cover film as to adhere the base sheet and cover film together and form a plurality of cells within which microspheres are hermetically sealed and have an air interface; characterized in that the binder material is selected from materials that show increased adhesion to the cover sheet when a solid layer of the material that has been previously laminated to the cover sheet is cured, and further characterized in that the binder material is cured in situ be exposure ao an electron beam after being thermoformed into contact with the cover film, whereby the bonds have increased bond strength to the cover film.

(CX-2 at 34, 35).

38. In the remarks accompanying the amendment dated September 27, 1976, it was stated in part:

This response formally presents arguments made at the interview, and presents amendments that stress points of distinction between the claimed sheet material and the prior art. These differences are discussed below, with particular focus on four points:

A) The bonds in applicant's retroreflective sheeting are prepared by combining two operations that are conventionally considered as alternatives not used in combination;

B) Applicant's retroreflective sheeting requires use of only certain materials selected by a test set forth in applicant's specification and amended claims;

C) Applicant's sheet material, as prepared by the novel combination of operations, exhibits a significant improvement in properties over prior art sheet material; and

D) The improvement in results obtained by sheet material of the invention is an unexpected, unpredicted improvement.

A) The two operations combined in forming bonds of applicant's sheet material and not combined in the prior art are:

1) thermoforming of the bonds into sealing contact with a cover sheet; and

2) curing of the bonds (i.e. chemically reacting them to an insoluble and infusible condition; see applicant's specification, page 3, 7th line from the bottom et seq.) after they have been thermoformed into sealing contact.

Conventionally, if bonds are thermoformed into sealing contact with an adherend, the bonds are considered complete and not further acted upon. The thermoforming (or heat-sealing operation as it is termed in the cited Holmen et al patent) develops the needed seal or adhesion, and nothing more is necessary. Alternatively, a cured bond is typically formed by introducing curable material between two adherends, and then curing the material. No bond exists until the curing operation. The curing operation solidifies the material and thereby forms the bond.

Combining the two operations would conventionally be considered superfluous (why cure an already formed bond?), and more than that, could be destructive of the bond. For example, the rigidity introduced by curing a bond obtained by thermoforming can take away adhesion, with the result that the adherends can be readily pulled apart. An example of such a loss of adhesion occurs when the binder material used in Example 1 of applicant's specification is laminated to polyethylene terephthalate and then cured. The adhesion of the binder material decreases as a result of the curing operation.

B) As noted in the preceding discussion, only selected binder materials are useful in retroreflective sheeting of applicant's invention. Applicant discovered that some materials develop increased adhesion to a cover sheet when they are cured after having been thermoformed into contact with the cover sheet. Further, applicant provided a test

by which such materials may be selected (see applicant's specification, page 10, lines 6 and 7, and page 13, first full paragraph). This test is recited in the amended claims to emphasize the distinctions exhibited by applicant's sheet material. None of the cited references recognize that some binder materials will increase in adhesion to a cover sheet when they are cured after being thermoformed into contact with a cover sheet, and none of the cited references provide a basis for making the selection of materials that is necessary to achieve such an increase in adhesion.

C) One example of the improvement in results obtained by the present invention is contained in Example 12. This example reports a test in which commercial sheeting of the prior art is compared with various sheet materials of the invention as to the extent to which the cover sheet is affected by shrinking forces caused by heating of the sheet material (such a test is a relevant indication of performance of the sheet material "on the job," where sheet materials of the invention are heated, for example, during lamination to a sign face, by outdoor exposure to sunlight, etc.). As the test results reported in Example 12 show, the sheet material of the invention resist the effects of shrinking forces much better than the commercial sheeting.

A test panel showing the differences in results measured in this test between commercial sheeting made under McKenzie, U.S. Pat. 3,190,178 and sheeting of the invention was shown to the examiner at the interview.

These tests illustrate the fact that the adhesion between bonds in sheet material of the invention and the cover sheet is much superior to the adhesion between the bonds and cover sheet in the commercial sheet material. The bonds have a better "hold" on the cover sheet, and because the cover sheet is held tightly, it is not as free to shrink in response to the shrinking forces that develop within it because of its biaxially oriented nature.

The commercial sheet material has been made and sold for many years, and difficulties with such sheeting have existed all during this period of time, but the sheet material of the present invention is the first to provide an improved bond strength.

D) The improvement in results exhibited by applicant's sheet material is an unexpected, unpredicted improvement. Nothing in the prior art would suggest that the adhesion between bonds and a cover sheet, where the bonds are solid in nature and have been preformed against the cover sheet, would be improved by curing of the bonds. In fact, as

noted above, in many cases, the adhesion of preformed bonds and a cover sheet is reduced by curing of the bonds.

Curing of a bond would be expected to increase the number of chemical connections between molecules of the bond and would accordingly be expected to increase the rigidity of the bond and certain strength properties of the bond. But the cover sheet is outside the bond and only contacts the bond. Increases in internal strength of a bond would not be expected to affect the degree of adhesion by the bond to a cover sheet.

The reason that the adhesion between the bond and the cover sheet is improved is not fully understood. It is theorized that the improvement results because binder material in the bond migrates into the cover sheet when the bond is thermoformed in place, and that subsequent curing increases the tenacity with which the migrated material holds onto the cover sheet.

But whatever the reason, nothing in the prior art suggests that thermoformed bonds be cured after thermoforming, and nothing in the prior art suggests that the cured bonds will have superior adhesion to the cover sheet.

(CX-2 at 35 to 39).

39. In the remarks dated September 27, 1976, as to the cited Holmen et al patent, it was argued:

The cited primary reference, Holmen et al, U.S. Pat. 3,924,929, column 4, lines 24-37, teaches various techniques for bonding septa to a cover sheet. But these techniques are all alternatives to one another. Holmen et al does not suggest using a combination of both thermoforming and curing in situ after thermoforming; it does not suggest that such a combination of operations would increase the adhesion between a bond and a cover sheet; and it does not teach the basis for selecting materials that will achieve such an increase in adhesion.

* * *

Applicant made an unobvious and significant advance in the art when he conceived that a <u>solid</u> material could be thermoformed into a network of bonds and then cured to develop increased adhesion to a cover sheet.

(CX-2 at 39-40).

40. The Examiner in a Patent Office action dated November 8, 1976 stated that all of claims 1 to 15 being allowable, prosecution on the merits is closed (CX-2 at 41).

41. A notice of allowance was issued by the Examiner on November 30, 1976 (CX-2 at 43).

42. On January 25, 1977, there was filed an amendment under Rule 312. Claim 1 was amended as follows (underlined material is added to the claim and bracketed material is deleted):

> 1. (Twice amended) Retroreflective sheeting comprising 1) a base sheet having a layer of retroreflective elements disposed over one of its surfaces; 2) a cover sheet disposed in spaced relation from the layer of retroreflective elements; and 3) a network of narrow intersecting bonds extending between said cover sheet and base sheet and comprising binder material thermoformed at the point of contact between said bonds and at least one of said cover sheet and base sheet so as to adhere the two sheets together and form a plurality of cells within which retroreflective elements are hermetically sealed; characterized in that the binder material is selected from materials that show increased adhesion to <u>said at least one of</u> the cover sheet <u>and base sheet</u> when a solid layer of the material that has been previously laminated to <u>said</u> [the cover] sheet is cured, and further characterized in that the binder material is cured in situ after being thermoformed, whereby the bonds have increased bond strength to the cover sheet and base sheet.

(CX-2 at 44).

43. In the remarks accompanying the January 25, 1977 amendment, the McKenzie '178 patent was made of formal record. The following was said about the '178 patent:

> Although McKenzie was not applied against applicant's claims in the office action dated June 25, 1976, it is the undersigned's recollection that McKenzie was a primary focus of the discussion at the interview between the undersigned and Examiner de los Reyes on September 16, 1976.

In any event, for the record it is noted that McKenzie, U.S. Pat. 3,190,178 teaches:

a) The basic structure of embodiments of applicant's invention as shown in applicant's Figures 1-4; and

b) The basic method used to configure binder material into the structure illustrated in applicant's Figures 1-4.

What McKenzie does not teach is that selection of binder materials according to applicant's teachings, and curing of those binder materials after they have been first thermoformed into place against the cover film, will produce increased adhesion between the cover film and bonds. In McKenzie's description of binder material in column 6, line 16 et seq., mention is made that thermosetting constituents can be used in the binder layer. But such a statement does not teach that increased adhesion between binder layer and cover film will result by choosing binder materials according to applicant's teachings and by thermoforming those binder materials into bonds and curing the bonds in situ in the manner taught by applicant.

Sheet materials have been commercially manufactured under the teachings of McKenzie for many years, and those commercial products have exhibited a weakness in adhesion between the bonds and cover film. Although the weakness in adhesion of the commercial sheeting was known all those years, it was not until applicant's invention that the weakness in adhesion was overcome.

(CX-2 at 45 to 47).

44. On February 8, 1977, the Examiner stated that the January 25, 1977 amendment had been entered (CX-2 at 49).

45. A supplemental oath dated February 18, 1977 was later filed (CX-2 at 50).

V. Inventor McGrath

46. Joseph M. McGrath, inventor of the '159 patent, is employed by complainant. Presently McGrath is the manager of the Traffic Control

Materials and Personal Safety Products Laboratory which is a part of complainant's Laboratories Europe. He was first employed as a permanent employee by complainant in November of 1972. Prior to that time he had worked as a technician and summer technical employee beginning in about 1966. He was hired as a permanent employee by 3M after he obtained a Ph.D. at Michigan State University in 1972. He has a Bachelor of Arts degree in chemistry from the College of St. Thomas in St. Paul, Minnesota and his Ph.D. from Michigan State is also in chemistry (McGrath CX-63 at 1).

47. Upon joining complainant in 1972 as a full-time employee he was assigned to a research and development group dealing with retroreflective products. He stayed with that group until 1981. In about 1978 he became manager of the laboratory group responsible for high intensity retroreflective sheeting. When he joined the group in 1972 he began working on projects to improve the retroreflective sheeting then sold by complainant or under development by complainant. His initial work related specifically to the cube-corner retroreflective sheeting then under development at complainant and to a sheeting then being marketed by complainant as high intensity retroreflective sheeting. The latter sheeting is also referred to as encapsulated lens, meaning that glass bead retroreflective elements are encapsulated within hermetically sealed cells. More specifically, the glass beads are supported and partially embedded in a layer of binder material, a transparent cover sheet is disposed above the glass beads, and the cover sheet is adhered to the layer of binder material by a network of narrow intersecting bonds that extend between the binder material and cover sheet. Encapsulated lens sheeting had been invented by an employee of complainant, viz. Eugene

McKenzie and the '178 McKenzie patent describes this structure (McGrath CX-63 at 1, 2, CX-4).

48. McGrath testified that at some point in his development work he became aware that the McKenzie type sheeting had some significant field delamination problems. In other words McGrath testified that in an unacceptably high percentage of cases, the cover sheet or top film of the McKenzie sheeting would become separated from the binder material through exposure to weathering, i.e., temperature cycling, precipitation, sunlight, heat, etc.; that delamination destroyed the effectiveness of the retroreflective sheeting; that water could then collect over the surface of the retroreflective glass beads causing the sheeting to lose reflectivity; that because of 3M's policy of standing behind its products, the end result of this problem was that in most instances 3M replaced the sheeting, often including replacement of the sign itself; and that this was a costly and significant problem with respect to the McKenzie type high intensity retroreflective sheeting (McGrath CX-63 at 2).

49. In McGrath's work on the high intensity sheeting he explored curable materials, i.e. materials that undergo a chemical reaction of constituent ingredients such as a crosslinking or chain-extension reaction. He particularly worked with electron-beam curable materials, i.e. materials in which curing is caused to occur in the presence of an electron beam. Some early electron beam curing experiments are reflected in McGrath's notebook 27891 CX-64, beginning at page 27. On September 19, 1973 (entry in notebook 36745, page 14 CX-65) McGrath testified that he proposed electron-beam treatment of the material after heat-sealing or thermoforming, in the hope

that the "electron beam treatment after heat-sealing will strengthen the seal and enchance weatherability ..."; that work continued, as reflected on pages 15, 16, 17, 18, 20, 21 of his notebook CX-65, on a variety of curable materials, some for high intensity and some for cube-corner sheeting; that in early October, 1973, he performed work which he entered on pages 22-24 of his notebook CX-65 under the heading "Post-curable cushion coat"; that by the latter term, he meant that the binder material was cured after heat-sealing; and that on October 8, 1973, he entered on page 24 of my notebook CX-65 a report about experimental samples of high intensity sheeting which had been heat-sealed (lines 15-17 of the page 24) and then electron-beam cured (lines 27-30 of page 24). McGrath testified that the test results included in the report showed superior seal strength for the experimental samples over conventional high intensity sheeting. To McGrath's knowledge those results represented the first reduction to practice of his invention (McGrath CX-63 at 2, 3).

50. McGrath testified that the Rod Lewis test for seal strength referred to on page 24 of his notebook 36745 (CX-65) is a type of peel strength test; that in this test a sample of sheeting (comprising cover film, glass beads, vapor-coated aluminum, and binder material i.e., all the layers shown in Figure 3 of McGrath's '159 patent) is reinforced by adhering a film of polymethyl methacrylate to the back side of the layer of binder material (the bottom side in Figure 3) with a layer of heat-activated adhesive; that a force is applied to peel the cover film away from the layer of binder material, specifically from the network of bonds formed by thermoforming the binder material into contact with the cover film; and that the layer of

polymethyl methacrylate was added to give the layer of binder material more integrity or strength when the cover film is peeled away from it. McGrath testified that the higher seal strength reported on page 24 of McGrath's notebook 36745 meant that the cover or top film was more strongly held to the base sheet, and it took greater force to peel away the cover film from the binder material or base sheet than was required for conventional, i.e., commercial, high intensity sheeting; and that peel strength tests, including the so-called Lewis test, were used repeatedly in the development work and it was regarded by McGrath as a good indicator of whether a test binder material exhibited improved adhesion to a cover film (McGrath CX-63 at 3, 4; CX-65 at 48; CX-67 at 22).

51. McGrath testified that quite early in his experiments outdoor weathering tests on sample products of his '159 patent were began as seen by entries in McGrath's notebook on November 9, 1973 (CX 65 at 32), February 8, 1974 (CX-65 at 50), and January 2, 1975 (CX-67 at 35). He further testified that the results were periodically reviewed as shown in CX-73 and CX-74; that CX-73 is a log describing individual test samples, mostly of products of the '159 patent sent out for weathering during the time period September 20, 1973 (the first product of his '159 patent apparently entry no. 2, sent out November 12, 1973) through March, 1976; and that CX 74 is a record of the results of the weathering as a representative entry McGrath referred to the entry on page 2 of CX-74 for Lot 22 for Arizona 45°, showing that a test panel was placed on test in Arizona on April 3, 1974, returned for examination on January 10, 1976, sent out to Arizona again on September 29, 1976, returned for examination on September 29, 1977, sent out again on November 29, 1977;

and finally returned on November 29, 1978, when it had experienced a total of 42 months of weathering (McGrath CX-63 at 5, 6).

52. McGrath testified that the '159 patent gives specific examples of appropriate binder materials; that the '159 patent also sets forth tests that can be used to select an appropriate binder material; that one of those tests is the razor blade test that is reported in Example 1 at columns 6 and 7 of CX-1; that another suitable test to determine whether there is increased adhesion is the peel strength test reported in Example 11 in column 10; that a heat shrink test may also be used to determine whether there has been increased adhesion in those sheetings in which the top film is biaxially oriented film with heating of the sheeting causing the top film to shrink, and the shrinkage force testing the adhesion between the top film and the binder material; and that the heat shrink test is reported in CX 1 in Example 12 in columns 10 and 11. McGrath defined "adhesion", as used in the '159 patent, as the force necessary to remove the top film from the base sheet (McGrath CX-63 at 9).

53. McGrath testified that through the mid-to late 1970's he continued research and development on the new products of the '159 patent; testing various binder materials and manufacturing conditions, testing the product through accelerated weathering and actual outdoor weathering tests to measure its durability and weather resistance; conducting factory experiments in which pilot quantities of the product were made; that CX 77 is a sample of Factory Experiment documents generated in March and May of 1974 reflecting the manufacture of the product for laboratory and technical service evaluation; that after enough data had been gathered that satisfied "ourselves" that the

product would perform well in the field, the sheeting was approved for general market release (CX 78); and that McGrath's direct involvement in the development work on high intensity retroreflective sheeting ended in 1981 when he was transferred to the research laboratory of the Industrial and Consumer Sector of 3M and took the position of Technical Manager (McGrath CX-63 at 9, 10).

54. Inventor McGrath is not exactly sure when he became aware that McKenzie type sheeting had some significant filed delamination problems. It would have been prior to the February 17, 1976 filing for the '159 patent. His best recollection is that it would have been between November 1972, when McGrath started full time at complainant, and February of 1976. Very likely it was prior to the end of 1973 (McGrath Tr. at 287, 288).

55. The McKenzie '178 sheeting is a retroreflective sheeting. It includes a base sheet having a layer of retroreflective elements disposed over on of its surfaces but the base sheet is different than the base sheet of the '159 patent (McGrath Tr. at 291, 294).

56. The McKenzie construction includes a cover sheet that is disposed in spaced relation from the layer of retroreflective elements but McKenzie's layer of retroreflective elements in the binder layer is different than in the '159 construction. The McKenzie construction also includes a network of narrow intersecting bonds extending between the cover sheet and the base sheet but the bonds are different than in the '159 construction (McGrath Tr. at 294, 295).

57. The narrow intersecting bonds that extend between the cover sheet and the base sheet in the McKenzie '178 construction comprises binder material which is thermoformed at the point of contact between the bonds and

the cover sheet and that is done so as to adhere the two sheets together and form a plurality of cells within which the retroreflective elements are hermetically sealed (McGrath Tr. at 295).

58. McGrath testified that McKenzie's sheeting is an encapsulated lens sheeting; but that McKenzie does not use the same materials that McGrath uses (McGrath Tr. at 297, 299).

59. According to McGrath, his retroreflective sheeting is different than McKenzie's retroreflective sheeting. His base sheet is different than that of McKenzie's. His network of narrow intersecting bonds extending between said cover sheet and base sheet is different than McKenzie's. His binder material is different than McKenzie's. His bonds 13 in FIG. 3 of the '159 patent are different than McKenzie's. One of McGrath's two sheets is different than what McKenzie teaches (McGrath Tr. at 301, 302).

60. When McGrath first joined complainant in November 1972 he began work on materials connected with retroreflective sheeting and one type he looked at when he started his work was the so-called cube corner. Another type that he worked with was the so-called encapsulated lens type. McGrath's testimony that his first reduction to practice occurred in September and October 1973 concerns work done in connection with encapsulated lens sheeting (McGrath Tr. at 304, 305).

61. As to the entries in McGrath's notebook for his first reduction to practice of the invention in issue, ingredients used were 1000 grams of xylene solvent, 700 grams of Elvacite which is a copolymer that has no functional groups (groups that could be further reacted by doing some further curing) or reactive cites on it, 150 grams of titanium dioxide white pigment and 150 grams of reactive liquid monomer polyethylene glycol 200 diacrylate.

The diacrylate polymerized by a free radical mechanism. A free radical attacks one of the double bonds, creating another free radical which can attract another acrylic double bond to create another free radical and all the while there is being built up a cross link or a higher molecular weight structure with acrylate functionalities. On both ends one would anticipate a considerable amount of cross linking but free radical refers to how the polymerization reaction proceeds. Polymerization is in the double bond (McGrath Tr. at 310, 311, 312, 313).

62. In the first reduction to practice a layer of beads was laid out which were vapor coated with aluminum. In the preparation of the McKenzie product a layer of beads which were vapor coated with aluminum was laid out (McGrath Tr. at 315; McGrath CX-63 at 2, 3; CX-65 at 14 to 18, 20 to 24).

63. In the first reduction to practice McGrath wanted to get rid of most of the solvent in his preparation of the binder material (McGrath Tr. at 318, 319).

64. After getting rid of most of the solvent in the first reduction to practice, most of the polyethylene glycol diacrylate would still be in monomeric form. Some small amount of the monomer might react in the drying process (McGrath Tr. at 319, 320).

65. In the first reduction to practice after the drying step, McGrath had approximately 15 percent of the reactive monomer, 70 percent of the copolymer and 15 percent of the white pigment (McGrath Tr. at 321).

66. In the first reduction to practice, there was a layer of polyethylene coated paper liner and glass beads are partially embedded in the polyethylene coated paper liner and a layer of aluminum is coated on top of the beads that are exposed and at that point the layer of the binder material

is spread on top of the vapor coated beads. Because it has solvent in it the binder material will spread easily. It was then put in the oven to evaporate solvent. Then McGrath applied a polyester carrier or sealing film with a pressure sensitive adhesive and the handspreads were heat sealed, i.e. subject to a thermoforming operation to form the narrow network (gridwork pattern) of bonds described in claim 1 of the '159 patent. A biaxially oriented (stretched in lengthwise and crosswise directions) polymethyl methacrylate cover film, that had been used in the McKenzie '178 construction, was used in the sealing step (McGrath Tr. at 324, 325, 326, 327, 328).

67. In the first reduction to practice the electron beam used initiated curing. The curing it initiated in McGrath's experience would be very rapid but it is not immediate and curing could go on for perhaps several hours after electron beam irradiation. The electron beam irradiation generates ions and it generates radicals. The radicals are very important in initiating the polymerization reaction through the acrylic groups. McGrath does not think it would be correct to say that an immediate or instantaneous polymerization takes place. There has to be some time for that to occur. Most of it may occur quite rapidly within minutes or hours, perhaps not in seconds (McGrath Tr. at 338, 339).

68. McGrath believes that, if there is any curing that proceeds prior to the particular samples in his '159 patent being exposed to electron beam irradiation, it would be relatively minor. He does not know for sure that that might occur or for sure that there is no curing going on before the electron beam irradiation step. So that there would be no confusion, the definition of "curing" is spelled out in the '159 patent at col. 2, lines 17-21. McGrath testified that prior to the electron beam irradiation, the

material, with the exception of titanium dioxide which is a solid material, in the examples as seen by the first reduction to practice would be redisolvable in a solvent such as xylene or acetone (McGrath Tr. at 340, 341, 342).

69. McGrath believes that at most very little curing takes place prior to electron beam irradiation in the sample as represented by the first reduction to practice (McGrath Tr. at 343).

70. McGrath's understanding is that every one of the fourteen examples described in the '159 patent is characterized in the chemical arts as a free radical reaction. All 14 involve free radical curing processes. Twelve of the examples initiated the free radical reaction by means of electron beam irradiation and as for the other two examples, in one case ultraviolet light was used in conjunction with an ingredient that decomposed when it was exposed to ultraviolet light to generate a free radical and in the other case, McGrath included in the composition an ingredient which decomposes to generate free radicals when the ingredient is subjected to heat (McGrath Tr. at 342, 343, 344, 345, 346).

71. The commercial materials that McGrath used to make the 14 examples of the '159 patent have inhibitors as supplied by the vendor which would have the beneficial effect of minimizing or preventing the reaction to occur prior to using a trigger. Electron beam is such a trigger which will overcome those inhibitors. The ultraviolet light decomposition of a photo initiator is another such trigger. Heat can be still another such trigger. McGrath testified that if one has a system that is thermally reacting from the point at which one mixes the binder material ingredients to the point that one has a completed finished product, then one has to be very careful so as not to cause too much of the reaction to occur too soon. He testified that if one

had material cured up to the point of being highly crosslinked prior to the thermoforming reaction, one would be unable to get a decent seal or decent wetting of the binding material with the top film. Thus if one uses the convenience of a trigger to start most of the reaction, after one has gone through the thermoforming operation, that makes it much simpler to produce a product and to be able to run a factory. That is what McGrath chose to do (McGrath Tr. at 347, 348).

72. McGrath testified that in all 14 examples of his '159 patent he has in effect prevented the excessive, premature curing from taking place by taking advantage of inhibitors that the monomer vendor put in their monomers. However he testified that when one subjects thermally reactive systems such as acrylate polymers to heat, it is likely that they are going to start curing to some small extent. They won't cure rapidly until you have used up the inhibitor that is present and then there could be a very violent reaction. The inhibitors are put in the monomer so that when one has a 55 gallon drum of monomer sitting on a loading dock, the drum will not explode in a premature reaction with another, causing a very dangerous condition. McGrath was able to take advantage of the presence of the inhibitors in the 14 patent examples (McGrath Tr. at 347, 348).

73. At col. 2, lines 11 to 21, McGrath testified that he is stating that there may be some curing going on prior to curing in situ but that it is small and the material is still flowable and therefore it has not cured in situ. Flowability according to McGrath is extremely important because one must thermoform the material so that the bonds which result from wetting out the binder are in sealing contact with the cover sheet. If there was the bulk of curing taking place prior to or during the thermoforming, one would not

obtain a very good seal. There can be some small amount of curing that takes place up to and during the thermoforming operation but there must be material that will flow so that one can thermoform the material into intimate contact with the cover sheet. If there is alot of curing during the thermoforming operation, the material would not flow (McGrath Tr. at 349, 350).

74. McGrath testified that in the 14 examples of his '159 patent he chose to leave the inhibitor in the binder materials because it was advantageous to use a trigger to get the curing to occur when McGrath wanted the curing to occur. He did not put inhibitor in. He choose to leave inhibitor in because there was an advantage in leaving it in (McGrath Tr. at 352).

75. Thermoforming to people working in the pertinent area was well-known. According to McGrath the McKenzie '178 patent thermoforms but thermoforms a different material. The purpose of the thermoforming operation in the '159 patent is to form a gridwork of seal lines as shown in FIG. 1 of the '159 patent. The same is true of McKenzie. When the term "thermoforming" is used, McGrath refers to the process by which hermetic seals are formed along the grid lines to form cells 14 of FIG. 1 of the '159 patent McKenzie '178 patent makes hermetic seals as a result of his thermoforming (McGrath Tr. at 354, 355, 356).

76. Complainant's product that is sold and indicated to be made in accordance with the '159 patent uses a biaxially oriented cover film (McGrath Tr. at 357).

77. McGrath's first reduction to practice writeup states in part: "Seal strengths double those for conventional product were obtained" (McGrath Tr. at 359).

78. The dosage of electron beam irradiation used for the '159 invention would be influenced by the materials that were used in the product being made (McGrath at 361).

79. CX-78 initiated release of complainant's sheeting made with the McGrath formulation to the marketplace. It is dated November 24, 1980 (McGrath Tr. at 364).

80. McGrath does not recall preparing examples or samples of his invention of the '159 patent that used other than free radical curable components in the binder layer (McGrath Tr. at 367).

81. A free radical reaction would be a chemical reaction in the broadest sense that would involve free radicals - either the production of free radicals or the termination of free radicals. Another possibility would be the continuation or growth of a free radical. Polymerization reactions can be broken down into two groups: addition and condensation reactions. Addition reactions would involve an addition of material across a double bond. For example such would be an acrylic polymerization where one is adding the polymeric units across the double bonds or the acrylate monomers. In a condensation reaction, one is eliminating a small molecule during the process of forming a large molecule. Thus in making a polyester material, one would take a polyfunctional alcohol and a polyfunctional carboxylic acid and one would put those together with the elimination of a small molecule of water and the formation of a polymer through an ester linkage and thus the term "polyester" (McGrath Tr. at 369, 370).

82. McGrath testified, referring to col. 4, lines 57 to 64 of the '159 patent, that he specifically mentions polyurethane and condensation polymers of polyethylene terephthalate and polyester and so it was his

intention to include such materials in his invention (McGrath Tr. at 372, 373, 374).

83. McGrath testified that to the best of his knowledge he concentrated on free radical reactions in his work on his '159 invention because it was working so well and it was very desirable from his point of view to use acrylic chemistry as a trigger. He had materials that were working very well and he followed that path during the years 1973 to 1980 with his co-workers and the technicians and the people who supported what he was doing. "We had a winner. We had something that worked and we were optimizing what worked. That is exactly what we did." (McGrath Tr. at 375, 376, 378, 381, 397; RPX-43).

84. Between the time McGrath first made a laminate according to his ideas in 1973 and the time that complainant commercially sold the product in 1980 McGrath tried literally thousands of examples. McGrath thinks that he provided a test for determining useful binder materials and he gave 14 examples of useful binder materials in the '159 patent. The test provided would be a test for laminating a film of the binder material against the cover sheet material and determining whether there is a difference in adhesion, i.e. the pulling apart of the construction or the lamination before the curing operation and after the curing operation. McGrath testified that he thinks one skilled in the art reading the '159 patent would get some ideas from the examples and from the teaching of the invention of things that would be worth trying but that the ultimate test would be actually to do it and test it, i.e. make up some binder material and test it against the specific cover film material that one wanted to use. The examples of the '159 patent, according to McGrath, represent the direction that he was going and represent the best

way he knew to practice the invention at the time he filed for the '159 patent (McGrath Tr. at 410, 411, 412).

85. It is correct that sometimes one can lower the adhesion between a binder material and a cover film in the encapsulated lens type sheeting by curing the binder. Apparently it depends upon the chemistry that is involved. The binder material has to be selected to have some special properties relative to the cover film material. One has to be able to make a reflective sheeting out of the binder material. One has to be able to go through the thermoforming operation and be able to form the bonds and be able to carry it through the necessary steps to make a reflective sheeting (McGrath Tr. at 412, 413).

86. McGrath believes that the theory starting at line 52 of the '159 patent and proceeding to line 4 of col. 3 of said patent is very likely what is actually happening today (McGrath Tr. at 413).

87. McGrath believes what is happening during the thermoforming operation of his '159 patent, as far as theory, is that there is some migration of material that was in the binder material up into what had been the cover sheet but he would not call that a chemical reaction. Rather it would be called a migration process. There could be a little polymerization taking place during the thermoforming operation. Physical or mechanical bonds (or some sort of a holding together or an adhesion between layers in the sealing area) that are formed in the thermoforming step are identified at 13 of FIG. 3 of the '159 patent which is part of the binder material that has been forced up (extending into the cover sheet) during the thermoforming operation. There would be only a small amount of any chemical bonding, if any, in the thermoforming operation. However there would be a lot of physical

binding over the width of the seal area in the thermoforming step (McGrath Tr. at 414 to 419

88. McGrath believes that internal strength (col. 2, line 44 of the '159 patent) and cohesion are close to synonymous (McGrath Tr. at 423).

89. McGrath testified:

> Q So that the record is complete, would you please turn to page 275 of your deposition?
>
> (Pause)
>
> A Yes.
>
> Q I'll ask the question, beginning in line three. "Did you ever try putting in thermosetting constituents into the McKenzie formulation?"
>
> A "That is what I did. That is, I think that is what we have been discussing in the present patent."
>
> Q "You mean in your McGrath patent you've done that?"
>
> A "Yes".
>
> Q "The way you see it, you took the McKenzie formulation and inserted thermosetting constituents into the binder layer?"
>
> A "Well, in essence. I changed the chemistry of the McKenzie binder layer to make it curable by substituting some portion of his resin with a curable component."
>
> Q Then on the next page in line one, question, "So what you did in essence, then, was to, to simplify this, was to substitute curable constituents in the binder layer of McKenzie?"
>
> A "Yes. In essence, yes."
>
> Q You so testified on August 26, 1987 is that correct?
>
> A Yes.

(McGrath Tr. at 429, 430).

90. RPX-44 is a piece from complainant's high intensity sheeting commercial process. The material is in-process material however and it has not been cured. It has a long shelf life between the thermoforming operation and the curing operation. Under pressure or under heat one could have the binder material start flowing around the beads which would lower the brightness, lower the angularity and produce visual defects in the product. There are some visual defects in the material which would render it not saleable. There are some wrinkles that may well be a result of the material having been rolled up on a tube or some such thing (McGrath Tr. at 430 to 434).

91. Col. 2, line 38 and the reference to "more easily" refers to more easily than the McKenzie material. The term "increased adhesion" in claim 1 of the '159 patent means adhesion is increased after curing as opposed to the same material or identical material measured before the curing operation. There are some embodiments of the '159 invention wherein after the thermoforming step but before the in situ curing step one cannot pull the bonds away intact before the bonds are cured and thus there would be left some of the binder material on the cover sheet when the bonds are pulled apart. In some embodiments it was found that in the uncured state one could pull the cover sheet from the binder layer after thermoforming but before curing and there was no visible trace of the binder material on the cover sheet. When the cover sheet before curing did not separate cleanly, the force after curing would be greater than the force before curing. There still is obtained a stronger bond after curing versus before curing (McGrath Tr. at 435, 436, 447, 448).

92. The heat shrink test is a question of mounting cured and uncured samples of encapsulated lens sheeting on an aluminum panel and subjecting those samples to time and temperature and then comparing what happens to the cured sample as opposed to the uncured sample. McGrath testified that the heat shrink test is really only relevant in material that has been made with a biaxially oriented cover sheet and the test is a way of testing the seal integrity of such samples by taking advantage of the fact that a biaxially oriented film will shrink and will shrink substantially as one approaches its glass transition temperature (McGrath Tr. at 438).

93. McGrath defined glass transition temperature as follows:

> As you warm up a polymeric material that's below its class [sic] transition temperature to near its class [sic] transition temperature, there are some rather marked changes in the property of the material. A polymeric material below its class [sic] transition temperature is in a lot of respects like a super cooled liquid, if you will. It's like it's frozen, it's glassy.
>
> And as it gets close to its glass transition temperature, it becomes soft and more flowable. So it undergoes -- it's a broad temperature range -- but a polymeric material, as you go through the glass transition temperature range, will go from a glassy type of material to a more flowing type of material. And that's what I mean by that.

(McGrath Tr at 439).

94. Glass transition temperature of polymethyl methacrylate is around 105 degrees centigrade which would be around 220 degrees Fahrenheit (McGrath Tr. at 440).

95. A heat shrink test is only relevant to determine increased adhesion with a biaxially oriented cover film because when a non-oriented cover film or film with a little bit of orientation is used there wouldn't be much shrinkage. McGrath testified that that such is implied in the '159 patent (McGrath Tr. at 440, 441, 443).

96. In deposition McGrath testified that a composition with curable material has to meet all of the requirements of the retroreflective sheeting end use that it is being put through and thus merely adding curable material to McKenzie '178 composition is not enough (McGrath Tr. at 445).

97. McGrath testified that he is not certainly the first person that would have used a razor blade to remove a film or a coating from a substrate. His understanding is that what he calls a razor blade test is quite similar to a wedge test, when one is driving a wedge between, for example, a paint film and a substrate or in testing adhesive joints between laminated pieces of metal. McGrath is uncertain as to how common it is to actually use a razor blade in the adhesive art (McGrath Tr. at 449, 450).

98. McGrath believes that peel tests of a variety of sorts are very commonly used to test adhesives and probably structural joints as well (McGrath Tr. 451).

99. McGrath testified that the important thing in running peel tests is that the comparison before curing and after curing both samples are subjected to exactly the same test routine. He thinks then that most if not all of the differences between a particular way of doing a test would sort out (McGrath Tr. at 451, 452).

VI. Prior Art

100. Exposed lens type retroreflective sheeting, developed in the late 1930's and early 1940's, utilized glass beads partially embedded in a polymeric binder material and partially exposed above the binder material. Such sheeting is illustrated in U.S. Patent 2,326,634 to Gebhard. A

disadvantage associated with the exposed lens sheeting was that it lost reflectivity when the partially exposed portions of the glass beads were covered with water (CX-15; CX-17 at 3, 4).

101. The black-out problem associated with exposed lens sheeting was solved by the development of what is now referred to as enclosed lens retroreflective sheeting. In this construction the glass beads are covered, rather than exposed, so even when water covers the sheeting, the glass beads remain effective to focus light on the underlying light-reflective aluminum layer. The prior art United States patents to Schwab 3,795,435 and Palmquist 2,407,680 show enclosed lens sheeting constructions wherein the binder layers are cross-linked or cured. A problem associated with enclosed lens sheeting is that the brilliancy or intensity of reflection is reduced by the transparent material which covers the microspheres and absorbs or dissipates a portion of the incident light (Smook Tr. at 1616 to 1619; CX-11; CX-10).

102. On June 22, 1965 the U.S. Pat. No. 3,190,178 ('178 patent) titled "Reflex-Reflecting Sheeting", issued to Eugene L. McKenzie. The '178 patent on its face is assigned to complainant and is based on application Ser. No. 120,680 filed June 29, 1961 (CX-4).

103. The '178 patent discloses:

> This invention relates to beaded "high brilliancy" reflex-reflecting sheeting effective as a reflex-reflector of light under all weather conditions, whether the surface thereof is wet or dry.
>
> The invention further relates to a novel method for making the beaded reflex-reflecting sheeting hereof.
>
> Reflex-reflection of light has now come to be a well-recognized concept referring to the ability of a surface to return light back toward its source even though the incident beam may strike the surface at an angle other than normal. Particularly efficient beaded

> reflex-reflectors of the "high brilliancy" type are disclosed and claimed in Gebhard et al. U.S. Patent No. 2,326,634, here incorporated by reference. Characteristically, these structures contain a layer of lens elements exposed to an interface of air, with the lense elements preferably having a refractive index (nd) between about 1.7 and 2.0 maximum reflexive light return. An unfortunate drawback of "high brilliancy" air-interface exposed-lens however, has for years been the fact that reflex-reflective light return is blacked out when the lenticular surface of exposed lenses is covered with water.
>
> A solution to the problem of preparing beaded reflex-reflectors which are effective to return light toward its source even though the incident beam may strike the surface at angle other than normal, whether the surface of the structure is wet or dry, is set forth in Palmquist et al. Patent No. 2,407,680. While the Palmquist et al. teaching is very effective to provide brilliant reflex-reflection of light under wet or dry conditions, the maximum brilliancy of reflex-reflective light return for such sheeting is not as great as that higher brilliancy of reflex-reflection possible when using exposed-lens structures of the type, for example, taught in Gebhard et al.
>
> The instant invention, for the first time insofar as I am aware, provides cuttable reflex-reflecting sheeting having so-called "exposed-lens" construction, having the accompanying extraordinarily "high brilliance" exhibited by such constructions, and having the ability to serve as a durable high brilliancy reflex-reflector under a variety of weather conditions, regardless of whether or not the cut sheeting is dry or covered with a film of water, or even immersed in water. In terms of light return, all sheet products of the invention exhibit a brightness of light return, as measured by a photometer, at least 400 times greater than that light return from a conventional white paint film. Products having photometer readings in excess of 1,000 times that for a white paint have been formed according to the teachings hereof.

(CX-4, col. 1, lines 9-57).

104. The '178 patent discloses that the sheeting of the '178 patent contains a plurality of hermetically isolated groups of exposed-lens-type reflex-reflecting complexes occupying near maximum optical surface area of the sheeting (CX-4, col. 1, lines 57-63).

105. McKenzie in his '178 patent teaches that the structure of his invention includes a transparent cover film hermetically sealed over the front face of an exposed-lens sheeting according to a pattern which serves to encapsulate and isolate the exposed-lens portions of discrete groups of beaded reflex-reflecting complexes from other groups thereof in the exposed-lens structure (CX-4, col. 1, lines 63-68).

106. As to the Palmquist '680 patent McKenzie in his '178 patent states:

> It, of course, is old to place a transparent cover film or plate over the lenticular surface of beaded exposed-lens-type reflex-reflectors; and such an expedient is discussed in Palmquist et al. U.S. Patent No. 2,407,680. A transparent cover film or plate does not alter the lens action of the beads of an exposed-lens structure, since the beads still contact at their front surfaces and thus no interference with the refraction of light at each front bead surface is created. Sealing of the edges of such structures has heretofore been difficult to accomplish without uncontrolled interference with the necessary exposed-lens feature. Even assuming the edges of such a structure are sealed satisfactorily, one still is left with a sheet article which cannot subsequently be cut as desired into a different shape for sign use, except by destroying edge-seals and making to necessary to seal the cut edges anew. Should satisfactory edge-sealing under field conditions be accomplished, resultant shapes for sign use are nevertheless relatively easily rendered useless if punctured ever so slightly during application to a sign base, or if punctured at any time later by vandals. As will further be explained below, a path for moisture to enter between a cover film and an underlying layer of air-exposed lens elements leaves one with a sign element quickly rendered worthless in practical use applications.

(CX-4, col. 2, lines 4-28).

107. As to the Hodgson et al. '191 patent, McKenzie in his '178 patent states:

> In the recently issued Hodgson, Jr. et al. U.S. Patent No. 2,948,191, it is suggested that a transparent cover film over a layer of exposed lenses or beads of reflex-reflector should be maintained in fixed relationship to the

reflecting material of the reflector as well as out of contact with the bead lens elements of the structure by means of a plurality of anchoring points distributed over the area of the reflecting material. One means suggested by Hodgson, Jr. et al. for accomplishing this is that of using a plurality of spaced apart beads of somewhat larger size than the beads relied upon for lens action in the structure, and anchoring the cover film to the spaced apart larger beads in the layer. This expedient, of course, serves solely to elevate the cover film above the beaded lens elements of the structure in a scattered point fashion without in any way protecting the lens elements from contamination with water, which latter would inherently seep between the cover film and lens elements from edge portions of the sheeting in the event of rain, and remain entrapped for relatively long periods thereafter because of capillarity. Varying degrees of moisture contamination underneath the cover film of such structures also occur during the usual change of conditions taking place from daytime, where higher temperatures prevail, into nighttime, where lower temperatures and higher humidity prevails and water condensation is apt to occur; and this at the very time reflex-reflection of high brilliancy is most critically necessary. Once contaminated with water, the reflex-reflecting function of air-interference exposed-lens structures is essentially blacked out, inasmuch as the difference in refractive index between water and that of the sphere lenses or beads of the layer in [sic] insufficient for effective light return where the beads of the layer have a refractive index as necessary for brilliant light return when exposed to an interface of air. (Beads having a refractive index of about 2.3 to 2.7 are needed for reasonably efficient reflex-reflection where their surfaces are covered with water, whereas beads between about 1.7 and 2.0 refractive index give best results when exposed to air.)

Another means suggested in the Hodgson, Jr. et al. patent for creating a number of anchoring points to maintain a transparent cover film in fixed relationship to the reflecting material of a reflex-reflector, as well as out of contact with beaded lens elements thereof, involves that of using screen materials (such as vinyl screening, nylon screening, coarsely woven fabrics such as cheesecloth, metal screening, or the like) as a grid work or mesh between the reflecting material and transparent cover film, and sealing the transparent cover film to the screening by tacking it to the points of elevation in the screening formed by the weave thereof. Such anchoring, as in the case of that formed by using larger beads, results in the formation of a structure readily contaminated by moisture penetration between the cover film and air-exposed lens

> elements, as may be demonstrated by immersing the structure in water, or by exposing its outdoors for a period of time to the changes of moisture conditions taking place during repeated daytime-nighttime cycling. The generally higher daytime temperatures tend to cause air between the cover film and air-exposed beads to expand, and then escape into adjacent "cells" and out the edges of the structure by passing through pores or openings between overlapped fibers or screening, while at the same time tending to push the cover film outwardly from the beads of the structure. Cooler night-time conditions cause the air in the structure to contract and draw in (through the route taken for air escape) night air usually heavily laden with moisture. Each day this procedure is repeated results in additional moisture intake between the cover film and beads; and after a relatively short period of time, the moisture condenses creating a hazy condition and leaving the beads with a water instead of air interface. Normal daytime heat is insufficient to evaporate and expel all of this moisture through the small openings inherently present in the screening. Thus, moisture contamination occurs and blacks out the reflex-reflector within a short period of time, e.g., a few weeks to a month or even possibly as long as six months, depending upon the particular climatic conditions in which the reflector is used.
>
> If one were to select a cover film and screen material having thermoplastic phases, and modify the Hodgson, Jr. et al. teachings by heating both the screening and cover film to thermoplasticity while simultaneously applying sufficient pressure along grid lines over only the network of screening in an effort to gain continuous seals free of minute ports and pores between areas of exposed-lens reflex-reflecting complexes, one inherently ends up erratically squashing the screening (or squashing both the screening and cover film) into areas reserved for the reflex-reflecting function; and in addition, the principle of using points of anchorage is destroyed. Under such conditions, loss of attractiveness as well as loss of required brilliance results.

(CX-4, col. 2 lines 29-72, col. 3, lines 1-53).

108. FIG. 1 of the '178 patent which is said to be "a schematic enlarged plan view of a fragment of the sheeting... [of the invention]" is almost identical to FIG. 1 of the '159 patent, except for the numbering (CX-4, lines 27-28, CX-1).

109. FIG. 2 of the '178 patent which is said to be an enlarged cross-sectional view of a fragment of the sheeting of the McKenzie invention, "particularly showing details of a hermetic seal" is similar to FIG. 3 of the '159 patent in issue (CX-4, line 28, 31, CX-1).

110. FIG. 3 of the '178 patent which is said to be an enlarged schematic cross-sectional view illustrating the general arrangement of apparatus elements and elements of the sheet structure of the McKenzie invention in position for forming the hermetic seal is similar to FIG. 2 of the '159 patent in issue (CX-4, lines 31-34, CX-1).

111. FIGS. 2 and 3 of the McKenzie '178 patent are represented as:

FIG. 2

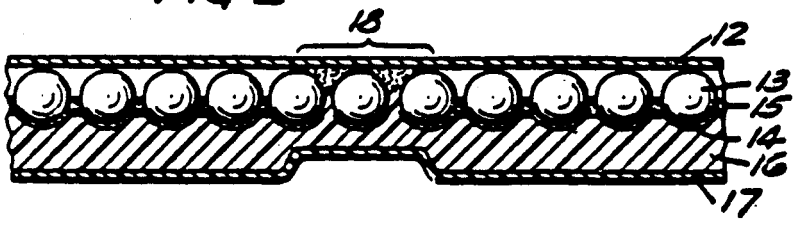

FIG. 3

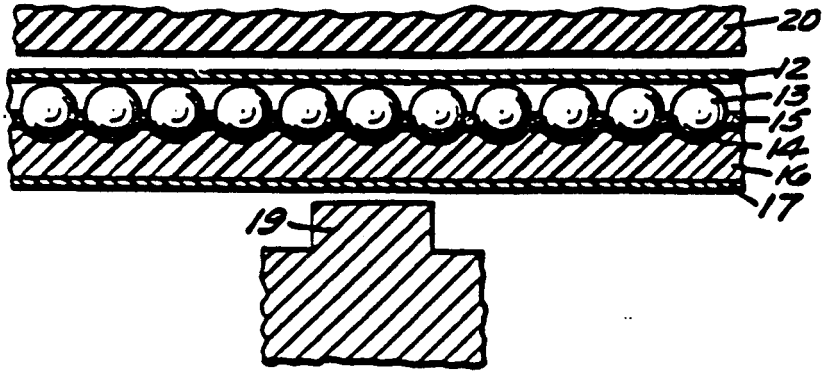

112. Referring to fIG. 2, the '178 patent discloses:

... the structure of my sheeting includes a transparent cover film 12, a layer of transparent small glass beads 13 (e.g., microspheres) with underlying reflective means 14, a binder layer 15, a further binder layer 16, and a release

carrier 17 underlying binder layer 16. In addition, a critical part of the structure of the sheeting lies in the narrow line area of the hermetic seal 18, where the binder material from layer 15 for the beads in other portions of the sheet structure, and any intermingled material from layer 16, is actually forced into intimate hermetically-sealed contact with the transparent cover film 12. The small glass beads in the pattern of hermetic seal throughout the sheeting are characteristically flooded over and masked by binder material in which the glass beads of other areas of the sheeting are partially embedded.

(CX-4, col. 5, lines 13-28).

113. Referring to FIGS. 2 and 3 as to the binder layer, the '178 patent discloses:

As in the teaching of U.S. Patent No. 2,326,634 to Gebhard et at., the beads of the structure in all areas of reflex-reflection are partially embedded in a binder layer 15, which suitably may be an organic resinous material. While thermosetting constituents may be employed in the binder layer 15, the layer as a whole must exhibit a thermoplastic or thermoadhesive phase so that it can be converted by heat into a viscous flowable or moveable condition during hermetic sealing. Binder layers 15 or 16 of the final product should not flow at temperatures below about 150° F., where the final product is to be used in applications exposed to solar heat. By employing color pigments in the binder layers, particularly optically exposed binder layer 15, improvements in the attractiveness of the external or face appearance of the reflex-reflector may be gained.

The fundamental purpose of binder layer 16, sometimes herein referred to as a "cushion" layer, is that of providing an adequate means of material, in combination with binder layer 15, for enveloping glass beads in those limited line pattern areas where a hermetic seal to the cover film is to be accomplished. The material of binder or cushion layer 16 may consist of the same material as that in binder layer 15; but it preferably is a material which exhibits sufficient flexibility at the thicknesses employed so as to remain unbroken or uncracked in final flexible sheet articles. Heating of limited portions of the binder layers during formation of the hermetic seal pattern serves to convert the binder layers into a viscous flowable state so that pressure applied thereto will force such material between glass beads in the limited pattern of hermetic seal and into contact with the interior surface of the transparent cover film where a vandal-resistant firm

and permanent hermetic bond is formed.

> Since the function of the carrier material 17 is essentially that of serving as a low adhesion or release surface to which the pattern of a heated embossing die used in manufacturing the sheeting will not stick, any of a wide variety of materials may be used a satisfactory carrier film. For example, such materials as polyethylene terephthalate ("Mylar") films cellulose acetate butyrate, polycarbonate, vinyl butyrate etc. are suitable. Indeed, if desired, the carrier film 17 may be omitted from the structure, and the problem of die sticking avoided by employing a low adhesion silicone coating over die elements pressed into contact with portions of the cushion layer.
>
> In making my sheeting, a critical step is that of laminating the transparent cover film and the reflex-reflecting structure together to form an intersecting network of narrow areas of pressure-formed hermetic seal. As may be observed by reference to FIGURE 3, die elements 19, with a projecting narrow line portion (shown in cross section in the drawing) are pressed against the deformable layers of the laminate underlying the glass bead layer thereof during formation of the hermetic seal. In this step, the side of the laminate occupied by the cover film 12 is pressed by the die elements 19 against a flat surface member 20, preferably not heated and suitably covered with rubber so as to permit yielding without loss of the moderate pressure needed for hermetic heat-sealing according to the pattern of the die elements. The die elements are heated sufficiently and pressed against the rear surface of the laminate long enough to cause heat fluidization and viscous displacement of binder material toward the cover film 12. Temperatures used for the die element and the time of pressing them against the binder material may therefore vary greatly, and are governed by the temperature at which binder material fluidizes sufficiently to move into contact with and seal to the cover film as well as the time required to reach such condition after initial die contact.

(CX-4, col. 6, lines 17-75, col. 7, lines 1-13).

114. As a specific illustrative example of a "preferred sheeting" of the '178 patent formed according to a "preferred process" of the '178 patent, there is disclosed:

> Transparent glass beads having an approximate diameter from 35 to 65 microns and a refractive index of 1.92 are temporarily bonded in a polyethylene coating on kraft paper

(the polyethylene coating on the paper being at a quantity of about 18 pounds per ream of 60 pound wet strength kraft paper). In accomplishing this temporary bonding, the polyethylene coated paper, with its coated side outwardly, is passed over the surface of a drum heated sufficiently to cause the polyethylene to become tacky. Simultaneously, the heat-tackified coating of polyethylene is dipped into contact with a mass of the glass beads in a trough beneath the hot drum. The tacky plastic coating causes a compact monolayer of glass beads to be picked up. Then the polyethylene coating is heated sufficiently to cause the polyethylene to soften and partially draw into it the compact monolayer of beads up to approximately 40 to 45% of their diameter (e.g., about 40 to 45% of total bead surface). The structure is then cooled, suitably by blowing room temperature air thereover.

Over the projecting beads of the polyethylene layer is then squeeze roll coated a bead-bond coating consisting of a solution of 3 parts by weight of a solid thermoplastic film-forming methyl methacrylate polymer material ("Acryloid B--72" of Rohm & Haas), with 3 parts pigment grade rutile, in 3 parts toluene and sufficient xylene to thin viscosity to about 400 cps. This coating is applied at a wet weight of about 4 grains per 24 square inches, after which solvent is evaporated by passing forced air at 120° F. over the surface.

Then the bead-bond coating is buffed with a felt of 100% wool and about 3/32 inch thick to remove bead-bond from the outermost area of the spheres (i.e., the outer approximately 20% of the total area thereof).

Aluminum is then vapor-coated over the exposed surface of the structure until a specular visually continuous coating is formed. The exposed 20% or so of the beads as well as the exposed surface of the bead-bond coating are thus reflectorized.

Thereafter, over the aluminum coating, is applied a "cushion" binder coating consisting of the following composition: About 25 parts by weight of the solid thermoplastic film-forming methyl methacrylate polymer used in the bead-bond coating, 25 parts pigment grade rutile, 6 parts of a solid thermoplastic film-forming ethyl acrylate polymer (CIOLV of Rohm & Haas), 6 parts of epoxidized soybean oil plasticizer ("Paraplex G-62" of Rohm & Haas), and 34 parts toulene. This composition is applied at a coating weight sufficient to give a dry film of about 2 to 4 mils thick over the aluminum coating, after which solvent is evaporated from the coating by forcer air drying at 180° F.

A stretch-resistant film which does not become tacky at the temperatures of thermoplasticity for the "cushion" coating is then applied thereover. The film suitably is polyethylene terephthalate coated with about a 0.5 mil thick layer of methyl isoamyl acrylate (a pressure-sensitive adhesive) for adhesion to the cushion coating.

The entire structure so formed is stripped from the polyethylene coated paper carrier, and then placed with its exposed bead surface in loose contact with a 3 mil thick biaxially-oriented methyl methacrylate film. The two layers of the composite article are passed at the rate of about 10 feet per minute between a metal embossing roll heated to about 270°-300° F., and a non-heated rubber roll, with the biaxially-oriented methyl methacrylate film in contact with the non-heated rubber roll. The embossing of the metal roll suitably is that of intersecting lines in a grid pattern with 1/8 inch square open recesses defined by intersecting 1/64 inch wide lines of the pattern. The nip between the rolls is adjusted so that the two layers of the composition article are subjected to just sufficient pressure to cause material of the binder layers of the structure to move into firm hermetic bonding contact with the cover film according to the limited die contact pattern under the temperature and time conditions employed.

The cushion coating of the illustrated structure softens and flows at about 200° F.; and the bead-bond layer 15 soften and flows at about 280° F. During lamination along lines of the grid pattern, the cushion coating and compatible material of the bead binder layer 15 apparently blend together on their way to the transparent cover film. No tearing of the beaded structure of the laminate occurs; and indeed, the beads in the area of displaced binder material appear to remain essentially in the same plane as the beads in other areas. They, of course, become flooded or "swallowed" by the flowing binder material in the limited areas of seal, which results in destruction of reflex-reflectivity in those limited areas. It is significant, however, that squashing or flooding out of bead-bond material into areas of the structure other than the line areas of seal is controlled and prevented by the steps of the heat-sealing process in combination with the structural features of the product sealed.

As an incidental observation, the aluminum deposited on the bead-bond layer between the glass beads in the area of the line seals is disrupted in those areas during the formation of the hermetic line seals. This is not objectionable.

(Of course, where hemispherically metallized beads are oriented in the reflex-reflector, without metal deposits underlying portions of the binder layer 15 between beads, such displacement of metal deposit as discussed for the preferred example does not occur during hermetic line sealing.)

During passage of the exposed-bead structure and cover film between the rolls, sufficient heating of the bead-bond coating occurs to effect heat fusion of that coating to the biaxially-oriented methyl methacrylate cover film in the manner of heat-seal connection; but the outer surface of the biaxially-oriented methyl methacrylate cover film usually should not be raised above about 200° F., preferably not above about 180°F. It is important, when making the preferred structure here illustrated, where a biaxially-oriented methyl methacrylate cover film is employed, to maintain the film at a temperature below its reversion temperature, which generally means that the temperature of the outer surface of the film should not exceed about 200°F. Above about 220° F, biaxially-oriented methyl methacrylate films tend to shrink and unsightly results ensue. Therefore, the biaxially-oriented methyl methacrylate film, during the step of sealing, should be maintained in contact with a relatively lower temperature surface. If necessary, the surface should be artificially cooled so as to prevent its temperature from rising to the point where heat from the heated metal embossing roll is sufficient, in combination with residual heat of the rubber roll, to elevate the temperature of the biaxially-oriented methyl methacrylate to the point of causing it to shrink or crinkle.

(CX-4, col. 8, lines 1-75, col. 9, lines 1-56).

115. In deposition, McKenzie testified:

Q How long did you work for 3M?

A Approximately thirty-five years.

* * *

Q Are you retired in 1982?

A I think so.

* * *

Do you have any degrees of any kind beyond your high school diploma?

A No.

Q Would you tell me what formal education you've had after high school, and by formal, I mean outside of your work, outside of the education that you get by working, what education have you had? What courses have you taken and where and when?

A If I recall, there was some in chemistry, English, speech. That's all I recall.

Q Where did you take the chemistry courses?

A University of Minnesota.

Q During what time period?

A Between 1945 and 1948.

* * *

A I believe I was assigned some responsibility in about 1956 with reflective sheeting.

Q Do you recall what that was?

A I believe I was appointed supervisor of research and development.

Q For what product or products?

A Retroreflective materials.

* * *

Q All right. I'm going to say 1956 with the understanding that it was approximately that time, but in 1956 when you become the supervisor of R & D in this area, is it correct that there were three types of products of retroreflective materials that you were working with, namely, liquids pavement marking products and glass beads?

A And reflective sheeting.

(McKenzie Dep. RPX-32 at 4, 9, 10, 14, 15).

116. McKenzie also testified:

Q In, say, 1960, were you aware of a distinction in the chemical arts between thermosetting and thermoplastic materials?

A Yes.

Q What was your understanding of those materials circa 1960, '61? What did they mean, thermosetting and thermoplastic, to you?

* * *

THE WITNESS: Thermosetting is generally an irreversible action. Thermoplastic, when heated, can be distorted or formed, where thermosetting cannot.

* * *

Q So that's as far as you know, the way you understand it today as well as the way you've always understood those terms?

A Yes.

* * *

Q When did you first learn of curing?

A 1945.

Q Would you tell me in what capacity?

A My capacity?

Q In what capacity, in what way, did you learn of curing in 1945.

A Screen process inks.

Q I'm sorry?

A Screen process inks.

Q You were working with screen process inks in 1945?

A Correct.

Q At 3M?

A Yes.

Q And how did curing come into the picture?

First of all, let me ask you what screen process inks are as opposed --

A Putting a copy of that stop sign.

Q So it was the process of applying ink through a screen to a product?

A Correct.

All right. And let the record show that during Mr. McKenzie's last answer, he pointed to the stop sign that's illustrated in figure 4 of Exhibit 50, the Gebhard patent.

Was that ink that you were working with in 1945 cured?

A Your question isn't clear.

Q You said that you were working with screen process inks in 1945 and that it was in connection with screen process inks that you learned of curing; is that correct?

A Yes.

Q And was the curing that you learned of in 1945 the curing process for the inks themselves?

A Yes.

Q Can you tell me as best you can what you understood by the term curing in 1945 in connection with those inks? What did curing mean?

A Polymerizing the resin.

Q Were the resins monomers when they started at the beginning of the process?

A No.

Q What form were they prior to polymerization.

* * *

THE WITNESS: I can't answer that until you describe what you call monomers.

* * *

Q All right. What do you mean by polymerizing?

A My definition is tying up the molecules so that they're permanently affixed in one chain.

Q And what do you mean by resins?

A Your question is too vague for me to answer.

Q Okay. In what respect? I'm quoting your definition. You said you understood curing to mean polymerizing resins.

I'm asking what you mean by resins as distinct from any other material.

A Relevant to the screen processing, the resin comes in a liquid state that can be an olio resinous material or an alkyd.

Q A-l-k-y-d?

A Yes. It has an agent in it generally called a drier. It goes through the stencil to make copy on the sign. It is exposed to heat of some relatively high temperature that causes the drier to make the interreaction of the molecules to turn from a liquid state to a solid state. That's drying, in that sense.

Q And in that sense, that's polymerizing; is that correct?

A That can be generally classes as that, yes, in my understanding.

(McKenzie Dep. RPX-32 at 24, 25, 26, 27, 28, 29).

117. McKenzie further testified:

Q All right. Let me ask you if it is correct that you reviewed internal technical reports at 3M relating to retroreflective sheeting between 1956 and 1960.

A Yes.

Q All right. And the reason I'm telling you -- For your own understanding, the reason I've picked that time period is not arbitrary. It's because you said you started as supervisor of R&D for retroreflective sheeting in about 1956, and it was in 1961 that you filed your application

for the patent, Exhibit 6, so that's why I picked that time period.

All right. Now did any of those internal technical reports that related to retroreflective sheeting also discuss curing or the possibility of curing?

A I can't specifically recall.

Q You don't know one way or the other; is that what you're telling me?

A Correct.

Q But you do recall that you reviewed -- in fact, this is how the subject came up, that you reviewed internal technical reports that did discuss curing in that time period, whether or not it related to retroreflective sheeting?

A Correct.

* * *

THE WITNESS: The meaning of curing is different relative to different product applications. I can't answer with a blank statement.

* * *

A Obviously, curing was always a consideration in making retroreflective sheetings.

Q All right. You say that as if it was foolish of me to even ask, or do I misunderstand?

A You have a lot of information if front of you. I presume you must have read them.

Q So, but, what you're telling me is the question is foolish or naive, because, of course, curing was considered in conjunction with the binder material in retroreflective sheeting products prior to 1961?

Is that the import of your --

A It was to me.

* * *

Q Mr. McKenzie, how long, approximately did you hold the position of supervisor of research and development for retroreflective materials?

A About five years.

Q Until about the time you filed the application for the McKenzie patent, Exhibit 6?

A That timing is pretty close.

* * *

Q Let me back up, then, before we get to that.

I would like you to tell me, with reference to the Gebhard patent and any other materials you'd like, for example, you may sketch them for me if you find it convenient, of what kinds of retroreflective structures 3M was making, retroreflective sheeting structures 3M was making between the years 1956 and 1961.

I think you've already --

A There were two primary products. One was the enclosed lens, which had a smooth is described here (indicating).

* * *

Q In any of the sketches in Exhibit 52, do you find an enclosed lens-type sheeting that illustrates what 3M was making in 1956 to 1961 of that type, that is, the enclosed lens type?

A The top one would be representative.

* * *

Q In other words, the binder materials in both Gebhard figure 1, that is, exposed lens, and Palmquist figure 1, that is enclosed lens, the binder material in both cases were of curable materials?

A Correct.

Q And were they cured, the binder materials?

A Yes.

Q Were the materials of the binder, of the binders, what you would classify as thermosetting materials?

A Yes.

* * *

Q Was, in circa 1961, the thermosetting synonymous with the term curable?

A In --

MR. EDELL: To him, you mean?

THE WITNESS: To me, in general terms, yes.

* * *

Q Yes. Why did you say that thermosetting constituents maybe employed?

A To increase higher temperature stability. That is why I would like to use thermosetting constituents.

* * *

THE REPORTER: "So in this suggesting in your patent that, quote, 'Thermosetting constituents may be employed in the binder layer, 15,' close quote, in that statement you were suggesting that the binder layer properties might be improved by employing thermosetting constituents and curing it: is that correct?"

THE WITNESS: At this point in time, I don't think I'm qualified to make any statement beyond what's in the document. It's 27 years later.

(McKenzie Dep. RPX-32 at 32, 33, 34, 36, 37, 38, 39, 41, 42, 55, 60).

118. McKenzie also testified:

Q Did you contemplate in 1961 that the organic resinous material that 3M was using in the exposed lens-type sheeting could be used as a binder material in your encapsulated lens invention?

A No.

Q Why not?

A They were themosetting and not thermoplastic.

Q And, so what? Why didn't you contemplate the use of that?

A I needed the thermoplastic for flowability.

Q In what respect?

A In the sealing process.

Q In the process, if you will turn your attention to the drawings, can you point to a drawing when you refer to the process you are referring to?

A Here (indicating).

Q You needed the flowability?

A Yes.

* * *

Are you distinguishing -- Is there a difference between the terms thermoplastic and thermoadhesive as you use them here.

A You may not understand constituents.

Q Let's deal with one question at a time.

Let's take yours first.

What do you mean by that? What do you mean, I may not understand constituents? What prompted you to say that?

A Constituents may be some of both.

Q Some of thermoplastic and some of thermosetting?

A Correct.

Q Okay. Now I understand that.

So you've got a material which has some thermosetting resin in it and some thermoplastic resin in it; is that correct?

A You may have, yes.

Q That's what you're suggesting here?

A Yes.

Q All right. Now, are you making a distinction between thermoplastic and thermoadhesive here when you say, "must exhibit a thermoplastic or thermoadhesive phase," or are those two terms being used as synonomous?

A They are interrelated.

Q What does thermoadhesive mean?

A As I understand it?

Q As you understand it.

A Twenty-seven years ago?

* * *

THE WITNESS: I would rather have the document stand as its own rather than me trying to interpret today what was put into it twenty-seven years ago.

(McKenzie Dep. RPX-32 at 94, 95, 103, 104, 105).

119. McKenzie testified:

Q Would you tell me what you mean by thermoadhesive, please?

A As I understand it today?

Q Anyway you want it.

A If I were to make a statement today, what I understand it to be would be flowability so that I have intimate interfacial contact, so that the two faces are intimately contacted and soft welded together.

Q What you're suggesting, then, is that thermoadhesive, as it is used here, means that the adhesive juncture of the two layers would remain in intimate sealing contact and flow together under heat as if they were one material?

A That's a fair statement.

* * *

THE WITNESS: I am saying I would like to have some thermosetting characteristic to stablize the heat

flowability resistance, which as we said, is characteristic of thermosetting.

BY MR. GARDNER:

Q So what you're saying is you would like to have stability under relatively high temperatures, which is characteristic of a cured thermosetting resin?

MR. EDELL: He's answered the question.

BY MR. GARDNER:

Q Is that correct?

A That's what I stated.

Q And in that instance, because you qualify it, that the layer as a whole must exhibit a thermoplastic or thermoadhesive phase, that notwithstanding the fact that there is curing, the material would still have to be thermoplastic for the forming operation; is that correct?

A This does not state that the curing is prior. It can be during.

Q During the thermoforming?

A Thermoforming goes through a temperature increase.

Q So you're suggesting here that that might occur during thermoforming, the curing; is that correct?

* * *

THE WITNESS: It's expressing a want, as I said before.,

MR. GARDNER: Yes. I understand that.

THE WITNESS: It was not, to my knowledge, demonstrated, or it would have been put in as an example.

MR. GARDNER: I understand. You're expressing a want.

THE WITNESS: Correct.

MR. GARDNER: And it's the want that I'm trying to get further information about.

THE WITNESS: That's exactly the want that's expressed.

* * *

Q Mr. McKenzie, I understand your testimony that after you developed the encapsulated lens sheeting, you essentially stepped out of the picture. In other words, you weren't involved a great deal in the commercialization of the product.

A There was one point where I was called back in on the production, which I stated.

Q In connection with cover film, you said, I believe, is that right, or tell me?

A Yes. In a product related to it, but the cover film was the primary problem.

Q Did that have anything to do with failure in the field?

A I think that was part of the problem, yes. I don't remember the --

Q What caused the failure or where was the product failing?

A Specially, it would be related to the breakdown of the bond of the seal.

Q Breakdown of what?

A The bond of the seal holding the structure together.

Q The breakdown of the bond? I'm just asking --

A At the seal, yes.

Q At the seal?

A Yes.

Q Does that mean at the interface?

A I don't remember the exact area that it may have come apart.

Q You don't know whether it came apart at the interface or came apart within the binding material?

A I don't remember.

Q Did you have any first hand information about the failure? In other words, did you see product that had failed or only hear about it?

A Probably both.

Q And have you refreshed your recollection at all in the last few minutes? Does the fact that you recall it help you recall where the failure occurred?

A No.

Q But there was failure that caused delamination; is that your recollection?

A I think so.

(McKenzie RPX-32 at 105, 106, 107, 113, 114, 115).

120. Respondents' RPX-41 is a chart identified by the heading "High Intensity Retroreflective Sheeting Prior Art". With respect to the McKenzie '178 sheeting it identifies the binder as "thermosetting". Complainant's Bingham testified:

Q Inviting your attention, Mr. Bingham, to RPX-41, is the McKenzie construction as depicted here in the third figure, is that an accurate representation of the McKenzie construction?

A That appears to be a cross-section of the McKenzie construction, yes.

Q And so far as you can tell, it is accurate?

A Yes. It is very brief, of course.

JUDGE LUCKERN: Now let me ask you this. Because we have some bing conflict here, or I think we do.

Were you including the reference there to binder thermosetting when you said yes, or were you just looking at the picture, do you understand what my question is?

THE WITNESS: Yes, I do.

JUDGE LUCKERN: In other words, the McKenzie cellular construction there, that layer which got the arrow to, is

that layer in your opinion being thermosetting? If you know, and I am not trying to box you in.

THE WITNESS: Well, it is my understanding of the McKenzie patent that that binder is thermoplastic.

JUDGE LUCKERN: What is your understanding of the term thermoplastic and thermosetting? I have got a double question there, but just so we get this terminology of how the witness is using it straight on the record.

THE WITNESS: My understanding of the term thermoplastic is that the material can be melted again and again. It can be melted, and solidified, and melted again. That would be a thermoplastic material.

JUDGE LUCKERN: How about a thermoset?

THE WITNESS: A thermoset may be melted once, but it is capable of being cross-linked or solidified to a point where it cannot be melted again. That would be thermosetting.

JUDGE LUCKERN: So there is this reference there to this layer being binder thermosetting.

Do you agree with that?

THE WITNESS: No, I do not agree with that.

JUDGE LUCKERN: Go ahead, Mr. Gardner.

BY MR. GARDNER:

Q Your understanding of the term thermosetting is curable, is that correct?

A That is correct.

Q So when you see the term thermosetting, thermosetting material, you think of a cureable material, is that correct?

A That is normally correct, yes.

(Bingham Tr. 162 to 164).

121. Enclosed lens sheeting is used interchangeably with the term "engineer grade sheeting" at complainant (Bingham Tr. at 159).

122. William Covert, manager of the Manufacturing Technology for Traffic Control Materials Division for complainant testified:

> Prior to 1974, was 3M selling enclosed lens sheeting which had been made by curing or partially curing the bead bond layer?
>
> A Yes.
>
> * * *
>
> Q Okay. Why was the bead bond layer cured [in the enclosed lens system]? What was the purpose of curing?
>
> A To hold -- To hold the bead in its pocket or socket.
>
> Q Any other reason?
>
> A For weatherability.
>
> Q What does that mean, for weatherability?
>
> A So that the sandwich would weather outdoors.
>
> Q Is that another way of saying so that the sandwich would stay durable in various weather conditions, high and low temperatures, for example?
>
> A Yes.
>
> Q And would hold together, that is, not delaminate?
>
> A Not per se, no.

(Covert Dep. Tr. at 3, 9, 15, 16).

123. Raymond E. Grunzinger is presently employed by 3M Company. His current job title is Senior Research Specialist, Traffic Controls Materials Division. He has been employed by 3M since 1970 (Grunzinger CX-198 at 1).

124. Grunzinger received a Bachelor of Science Degree in Chemistry in 1965 from St. Louis University. He received a Ph.D in Organic Chemistry in 1970 from Washington State University (Grunzinger CX-98 at 2).

125. Since 1970 Grunzinger has held the following positions with complainant: he was first hired as a Senior Chemist in what was then the Special Enterprise Department within the Reflective Products Division. The Reflective Products Division at that time was making reflective materials for traffic signs and other applications. During the period of 1970 until 1973 while he was aware of the work being done within the laboratory relating to reflective products generally, he was personally involved with other new product developments on reflective bicycle tire sheeting and other exposed lens reflective products (Grunzinger CX-198 at 1).

126. Grunzinger's direct involvement with reflective materials began in 1973 when he became Senior Chemist in complainant's Safety Systems Department (later Division). During the period of 1973-1976 in that capacity, he worked on projects relating to reflective materials including reflective tape for bicycle tires, reflective products for license plate materials and reflective products for commercial signage such as advertising emblems on vehicles. Grunzinger's work included research on materials used in retroreflective products (Grunzinger CX-198 at 1).

127. In 1976 Grunzinger was promoted to Research Specialist within complainant's Safety Systems Division. During the period 1976 through 1982, he continued work on reflective materials (Grunzinger CX-198 at 2).

128. In 1982 Grunzinger left the Safety Systems Division to become a Research Specialist in complainant's Traffic Controls Materials Division. His primary responsibility beginning in 1982 has been on projects relating to materials for reflective highway and traffic signs. Those retroreflective material include the encapsulated lens retroreflective sheeting that is the subject of this investigation. In 1984, Grunzinger was promoted to Senior

Research Specialist within the Traffic Control Materials Division. From 1982 until the present, Grunzinger's primary responsibility has remained in the areas of reflective materials for highway and traffic signs including retroreflective sheeting. Since 1970 his work has involved the use of polymeric materials in reflective sheeting. Since 1982 Grunzinger has had experience in the application of polymeric materials in exposed, enclosed, encapsulated, microcube corner and pavement making retroreflective sheeting. (Grunzinger CX-198 at 2).

129. Grunzinger is named as inventor in one United States patent and three United States patent applications relating to retroreflective sheeting. The issued patent is U.S Pat. No. 4,530,859 entitled "Method of Preparing a Polymeric Coating Composition From a Blocked Isocynate Functional Polymeric Compound and a Crosslinking Agent". All of the patent and patent applications involve the use of polyurethane in one or more layers of the retroreflective sheeting (Grunzinger CX-198 at 2, 3).

130. In 1985 Grunzinger was the recipient of two awards at 3M. He was named a Division Circle of Technical Excellence Winner and a Corporate Circle of Technical Excellence Winner. Those awards are given by complainant to technical employees who, during a particular year, meet certain qualifications relating to their technical excellence, including making significant technical contributions to the division and company. Upon being selected as a division winner, the employee is then considered for the corporate award. In 1985, 18 corporate awards were given from the 5,000-6,000 eligible technical employees (Grunzinger CX-198 at 3).

131. Grunzinger was qualified as an expert in polymer chemistry, the chemistry of retroreflective sheeting, the use of polymeric material in retroreflective sheeting, the application of polymeric material in exposed, enclosed, encapsulated and microcube corner, and pavement marking retroreflective sheeting (Tr. at 1928).

132. Grunzinger has read the '159 patent. He also has read the prosecution history of the '159 patent, and the prior art that was cited by the Examiner, viz. U.S. Patent No. 3,140,340 to Weber, (CX-3); the '178 McKenzie patent (CX-4); U. S. Patent 3,558,387 Bassemir, (CX-5); U. S. Patent 3,681,167 to Moore (CX-6) and U. S. Patent 3,924,929 to Holmen et al (CX 7). He has also read and studied the following patents: U. S. Patent 3,676,249, to Lemelson (CX-8), U. S. Patent 3,372,730 to Frigstad (CX-9), U. S. Patent 2,543,800 to Palmquist (CX-10), U. S. Patent 3,795,435 to Schwab (CX-11) and U.S. Patent 2,956,904 to Hendricks (CX-12). Grunzinger credibly testified that it his opinion those patents do not teach the invention of the McGrath '159 patent and that he does not find any teaching or suggestion in any of the prior art references that the disclosures of the prior art references could be combined to make the '159 invention (Grunzinger CX-198 at 3, 4).

133. Grunzinger credibly testified that the '178 patent is concerned with encapsulated lens retroreflective sheeting; that in one sentence (column 6, lines 21-25), the '178 patent states that thermosetting constituents may be present in the bead binder layer 15 of the product; that he has read this statement together with the sentence in the '178 patent at column 6, lines 25-28, which states that the binder layer should not flow at temperatures below 150 degrees F; and that in Grunzinger's view the thermosetting constituents referred to column 6, lines 21-25, are added to the bead binder

layer for the purpose of increasing the temperature at which the bead binder layer forms a viscous flowable mass, i.e., improving the heat stability of the binder layer (Grunzinger CX-198 at 4).

134. Grunzinger credibly testified that there is no teaching in the '178 patent that the thermosetting constituents referred to column 6, lines 21-25, are reacted or cured after thermoforming of the binder layer into a network of bonds; that for the purpose of raising the melting point or softening point of the bead binder layer, it would be quite logical and normal to cause reaction of the thermosetting constituents prior to thermoforming; that such a crosslinking would leave the bead binder layer thermoplastic or thermoadhesive and suitable for thermoforming and would be of the type referred to in the Lemelson patent at column 3, lines 42-47, where Lemelson states that he used crosslinked material to increase melting point of a thermoplastic polymer and that the crosslinked material of the Lemelson patent still melts after crosslinking, meaning that it is still thermoplastic after crosslinking (Grunzinger CX-198 at 4, 5; CX-8).

135. Grunzinger credibly testified that at no point does the '178 patent suggest a crosslinking that would convert the bead binder layer to an infusible condition, as the '159 patent calls for at column 2, lines 16-21; that such a crosslinking to an infusible condition would be inconsistent with the teachings in the '178 patent at column 10, lines 4-8, that the sheeting "can easily be sealed along its cut edges (cut to form letters or other characters)" through the use of heat and vacuum (pressure) applied to the sheeting; and that such a sealing requires thermoplasticity of the bead binder layer in the finished sheeting, so that the bead binder layer can flow into contact with the cover sheet in the edge areas and form a seal with the cover

sheet (Grunzinger CX-198 at 5).

136. Grunzinger credibly testified that the single-sentence reference in the '178 patent to use of thermosetting constituents is very brief and vague; that there is no teaching as to what thermosetting constituents to use, or of what proportion of thermosetting constituents to use; that in no way does the statement convey to Grunzinger an idea of the invention of the '159 patent in which a selected curable binder material is cured after thermoforming to obtain increased bond strength; and that there is no teaching at all in the '178 patent about the selection of compatible binder materials and cover films (Grunzinger CX-198 at 5).

137. Smook testified that the language in the '178 patent at col. 6, lines 21 to 25, viz.

> While thermosetting constituents may be employed in the binder layer 15, the layer as a whole must exhibit a thermoplastic or thermoadhesive phase so that it can be converted by heat into a viscous flowable or movable condition during hermetic sealing

is a strong implication of a suggestion to solve the very problem which McKenzie sheeting experienced in the field. He also testified that McKenzie did not recognize the existence of a delamination problem when his '178 patent issued on June 22, 1965 (Smook Tr. at 1607, 1608, 1644, 1645).

138. U.S. Letters Patent No. 3,676,249 (the '249 patent) issued on July 11, 1972 to J.H. Lemelson on an application filed Dec. 18, 1967 which is a continuation-in-part of an application filed March 22, 1963 which latter is a continuation-in-part of an application filed April 9, 1957 (CX-8). The '249 patent is titled "Irradiation Method For Production Of Fiber-Reinforced Polymeric Composites."

139. The '249 patent states in part:

> This invention relates to methods for continuously forming and processing composite materials such as composite sheet materials, articles and packaging made of a plurality of members which are continuously laminated or welded together and thereafter treated to improved [sic] the physical characteristics of at least one or more components of said composite material.
>
> It is known in the art to irradiate certain polymers to upgrade their physical properties by for example, cross linking which results in increasing the stiffness or rigidity of the polymer, bumping the melting point and improving the chemical characteristics thereof. Radiation, for example, may be provided by means of a Van De Graff generator or source of atomic fission having the energy thereof directed against the polymer for a predetermined time interval and of such an intensity to effect the desired degree of cross linking of the polymer. However, once the polymer is cross linked, it becomes most difficult to further process same such as by conventional thermoforming, molding or welding techniques. Accordingly, film and sheet materials which have been cross linked may not easily be further processed and generally are limited in the areas of their application because of the difficulties experienced in further attempting to thermally deform or weld same. Articles which are fabricated as individual units are difficult to process by irradiation means because of the necessity of specially handling and orienting or predeterminately conveying the articles through a radiation field.

(CX-8 col. lines 54 to 71, col. 2, lines 1-9).

140. The '249 patent in describing an embodiment states an end effect of the disclosed invention is to convert, for example, a thermoplastic polymer such as polyethylene comprising sheet members from a relatively soft material having a low melting a point to a cross linked material of substantially greater rigidity, strength and higher melting point (CX-8, col. 3, lines 43 to 48).

141. Claim 1 of the '249 patent reads:

> 1. A method of fabricating a composite material, comprising:
>
> (a) feeding from a first supply means an elongated base

> of solid synthetic polymeric material which upon being subjected to high energy irradiation, will undergo a substantial change in molecular structure manifested as a substantial increase in strength and resistance to heat;
>
> (b) feeding from a second supply means-solid glass fibers as reinforcing material for said polymeric material;
>
> (c) generating and directing high energy radiation, which is operative to produce said substantial change, against said base and said reinforcing material while holding them in contact with one another; and
>
> (d) continuing the irradiation of the base and reinforcing material in contact with one another for a sufficient time and at a sufficient intensity for increasing the strength and resistance to heat of the base material.

(CX-8, col. 6 at lines 34 to 54).

142. Smook, relying on the following portion of the '249 patent at col. 5, lines 35 to 43--

> In a modified form of the invention the apparatus of FIGS. 1 and 2 may be modified to cause the feeding of a plastic monomer or combination of monomer and other material or materials between the outer sheets or materials 54, 56 which monomer is thereafter polymerized by the action of the high energy radiation intersecting the composite material as described so as to form a strong bond thereof between the outer material.

--testified:

> It would seem to me, Your Honor, that if separation of the cover sheet in the McKenzie construction were a problem, and that McKenzie himself recognized it by placing that strategic clause in his patent [at col. 6, lines 21 to 25] that a man with any skill would read Lemelson and decide that that was the way to tackle and solve the problem.

(Smook, Tr. at 613, CX-8).

143. Grunzinger presuasively testified that the Lemelson, '249 patent is concerned with the formation of reinforced filament tapes; that the

patent essentially teaches the fusing together of two layers of homogenous polymeric material such as polyethylene with reinforcing filaments disposed between the two layers, and the irradiating of the fused or welded polymeric material; that Lemelson teaches that then radiation causes crosslinking or other physical change of the polymeric material and at some points indicates that crosslinking improves the bond between the fused together layers of the polymeric material such as polyethylene which Grunzinger interprets as meaning that the crosslinking of the two layers of polyethylene causes the polyethylene in the monolithic layer to form a gel structure which increases the melting point; that the crosslinking increases chemical bonds within the material, and in effect, increases the cohesive strength of the material, throughout the film including the area where the two layers were welded together; that such an increase in bond strength (which is not documented in the Lemelson patent) is not the same as the increased bond strength obtained by the '159 patent and does not predict the increased bond strength of the '159 patent, and that the '159 patent does not have the monolithic film structure taught by the Lemelson patent, but instead uses a curable binder material thermoformed into contact with a dissimilar cover sheet (Grunzinger CX-198 at 6).

144. Grunzinger persuasively testified that in his view the teachings of the Lemelson '249 patent have no application to a product such as that taught in the '178 patent which uses a polymethylmethacrylate cover film in an effort to obtain a long lived retroreflective sheeting; that for example, the chemical differences between polyethylene and polymethyl methacrylate would prevent Lemelson's polyethylene from obtaining lasting bonds to a polymethylmethacrylate cover sheet if polyethylene were used as a

binder material in the '178 sheeting; and that the use of Lemelson's polyethylene for the cover sheet would result in reduced transparency and therefore reduced retroreflection, and would not offer the extended outdoor weatherability that polymethylmethacrylate offers (Grunzinger CX-198 at 6, 7).

145. Grunzinger persuasively testified that he finds no mention in the Lemelson '249 patent of crosslinking to a state of insolubility and infusibility as described in the '159 patent for the binder material and that bonds of binder material thermoformed into contact with a cover sheet in the '159 patent are fundamentally different from the bonds of Lemelson, and that Lemelson does not predict the increased adhesion or bond strength upon curing of the '159 patent (Grunzinger CX-198 at 7).

146. Smook testified:

> Q Doctor, isn't it -- is it your testimony that if I have any crosslinking polymer at all that it is not going to be able to rethermoform over and over again?
>
> A Have to define what you mean by "crosslinked." That's a very loose term. Crosslinking, or curing, as we've been discussing it here today, is a continuing thing, starting with simply chain extension; and then subsequently branching.
>
> Ultimately the formation of a loose network, and finally a tight network. And you're certainly right in saying that a tight network -- entire crosslink network is infusible.
>
> The -- all I'm suggesting here is that they [Lemelson patent] haven't defined how far the structure has been crosslinked; and it's impossible to tell whether it's crosslinked enough so that it cannot be subsequently reformed by melting.
>
> And the way that reads, I would guess that it cannot be. But that's subject to interpretation.
>
> Q Isn't he just saying that he's trying to convert his materials from one having a lower -- low melting point to one having a higher melting point?

A That's a very difficult thing to do and control. And I don't believe it. No.

Q Is there any place in the Frigstad patent where he say'd that --

JUDGE LUCKERN: We're in Lemelson. Now we're going to Frigstad?

MR. EDELL: Excuse me, excuse me.

BY MR. EDELL:

Q Is there anything in the Lemelson patent where he talks about his material being insoluble or infusible?

A I don't thing there is.

(Smook Tr. at 1415, 1416).

147. Grunzinger persuasively testified that the Frigstad '730 patent provides filament reinforced sheets that are laminated to form a monolithic cured rigid composite; that the composite is said to have greater interlaminar strength as a result of the use of layers of toughened or impact-modified epoxy resins between plys of the composite; that this is not the type of effect that McGrath discusses in his '159 patent; that there is no teaching in Frigstad of improvement in adhesion between plys of the composite through curing, and in fact no reporting of results of a comparison of peel strength before and after curing; that since in Frigstad there are common reactive ingredients in each ply of the composite article (i.e. epoxy resin or phenol formaldehyde resin) and since these common reactive ingredients react together in the monolithic composite, Grunzinger sees no pertinence of the Frigstad teachings to the '159 patent, where a curable binder material is thermoformed into contact with a dissimilar cover sheet that does not contain the same reactive ingredients of the binder material (Grunzinger CX-198 at 7, 8).

148. Grunzinger also persuasively testified that it should be noted that the binder materials taught in the Frigstad '730 patent would be too brittle for use as a binder layer in retroreflective sheeting, which is necessarily flexible; that Frigstad's epoxy resins would lack adequate exterior durability in the thin layers of the reflective sheeting; and that the curing conditions for Frigstad's resins are too hot and too long to provide encapsulated lens retroreflective structures described by the '178 and '159 patents (Grunzinger CX-198 at 7, 8).

149. U.S. Letters Patent 3,472,730 (the '730 patent) issued on October 14, 1969 to R.A. Frigstad on an application filed December 28, 1967. The '730 patent is titled "Heat-Curable Filament-Reinforced Resinous Sheeting and Laminating Process Using Same" (CX-9).

150. Independent claim 1 of the Frigstad '730 patent reads:

> 1. Filament-reinforced resinous sheeting adapted to form laminated heat-cured resinous objects of high interlaminar strength comprising (A) a thin flexible layer of high-strength reinforcing filaments, (B) a heat-curable resin composition coated onto the filaments, and (C) a separate exterior film about 1/2 to 4 mils in thickness firmly attached on at least one side of the layer of coated filaments, said film comprising a heat-curable resin composition that includes (1) a high-strength heat-curable resin and (2) a modifying resin that substantially increases the capability for elongation of the film resin composition when cured, said modifying resin having a high molecular weight and exhibiting a substantial deformation when stressed beyond its yield point greater than that exhibited by the heat-curable resin, the modifying resin comprising no more than 50 parts by weight of the combination of heat-curable resin and modifying resin in the exterior film, and the total heat-curable resin composition in the sheeting comprising between about 35 and 65 volume percent of the sheeting.

(CX-9, col. 7 at lines 21 to 41).

151. Smook referring to the following portion of the '730 patent starting at col. 1, line 46:

> This invention provides filament-reinforced sheets from which articles are laminated that have greatly enlarged interply or interlaminar strength over that exhibited by articles laminated from prior art filaments-reinformed resinous sheeting. The filament-reinforced resinous sheeting of this invention includes a thin flexible layer of high strength reinforcing filaments, preferably a layer of nonwoven collimated filaments, and a heat-curable resin composition coated onto the filaments. In addition, a separate exterior film about 1/2 to 4 mils in thickness is carried on at least one side of the layer of coated filaments. This film comprises a heat-curable resin composition that includes (1) a high-strength heat-curable resin and (2) a modifying resin that substantially increases the capability for elongation of the film resin composition when cured. The modifying resin, in general, is high in molecular weight and exhibits a substantial deformation when stress beyond its yield point. The modifying resin comprises no more than 50 parts by weight of the combination of heat-curable and modifying resins in the film resin composition, and the total heat-curable composition in the sheeting comprises between about 35 and 65 volume percent of the sheeting.
>
> Insofar as is known, the best interply strength before this invention of objects molded from filament-reinforced resinous sheets, as indicated by the climbing drum peel test (described later), was about 7-8 pounds per inch of width. By contrast, the interply peel strength of objects molded from preferred filament-reinforced sheets of this invention is at least twice as great. As a result, laminated structural members, such as the skin panel of helicopter blades, have a much longer life and can resist higher and lengthier applications of flexural stress.

testified:

> ...Your Honor, but I think that's enough of a suggestion to anyone who was looking for a solution to ply separation, to follow up on.
>
> JUDGE LUCKERN: Again, as far as, and if I misquote you please correct me. I'm not, but as far as the recognition of the problem in McKenzie, you would again be referring to, where would you again be referring?

THE WITNESS: Yes, Column 6, Line 21, Your Honor.

JUDGE LUCKERN: Could you just tell me again, as to the basis, how you put the two together again?

THE WITNESS: Talking about a trained scientist now.

JUDGE LUCKERN: Yes, the man that we've described, yes.

THE WITNESS: Given this problem in delamination in retroreflective sheeting, he would go to the retroreflective sheeting industry first. He would find these three patents right off the bat because that's, there isn't all that much literature on the subject.

JUDGE LUCKERN: And the three patents are what patents?

THE WITNESS: He'd find McKenzie, he'd find Schwab, and he'd find Palmquist.

JUDGE LUCKERN: Okay. We haven't hit them but it's all right. Go ahead.

THE WITNESS: Admittedly the other two, Schwab and Palmquist, are enclosed lens sheeting so they don't have the cellular-like structure. But what they did was to go to a crosslinked structure in order to consolidate the cover sheet which is now a solid cover sheet not with cells. Then you go on to McKenzie where the cells are described, the cellular structure, and that's where the delamination is coming in with a thermoplastic binder.

So to make the transition between the thermoset or cured material that's in Palmquist and Schwab, to the problem as outlined in McKenzie, is another simple transition.

Now if they didn't do that they'd then look at other systems with crosslinked adhesives or binders which would weld two layers together, and that's what is demonstrated in both Frigstad and Lemelson.

JUDGE LUCKERN: And by Frigstad you're referring to Column 1 that starts around Line 45?

THE WITNESS: Yes, that's correct.

(Smook Tr. at 1615, 1616, CX-9).

152. Respondents' expert Smook testified that neither the Frigstad nor the Lemelson patents relates to retroreflective sheetings, that neither has a base sheet with retroreflective elements disposed over one of its surfaces; that neither has a cover sheet disposed in space relation from the layer of retroreflective elements, and that neither teaches thermoforming narrow intersecting bonds in retroreflective sheeting into sealing contact with the cover sheet (Smook Tr. at 1407, 1408).

153. Respondents' expert Smook testified that in both Frigstad and Lemelson it is the entire structure that is being cured, not just bonds portion of the base layer and that in the '159 patent, it is only the base layer and the network of bonds that is cured and that the cover sheet is not cured (Smook Tr. at 14113).

154. U.S. Letters Patent No. 2,543,800 (the '800 patent) issued March 6, 1951 to P.V. Palmquist et al. on an application filed Dec. 5, 1947. The patent, assigned in its face to complainant, is titled "Reflex Light Reflector" (CX-10).

155. The '800 patent relates to reflex light reflectors of the class having a catadioptric structure wherein a layer of glass beads is partially embedded in a film structure containing light-reflective pigment underlying the spheres so as to produce, in combination, refraction and reflection of incident light beams. The Palmquist invention was said to involve the discovery that the optical characteristics can be secured by means of the catadioptric structure wherein the minute sphere lenses have a refractive index of approximately 1.9, the transparent undercoating contains transparent color pigment, and the reflective layer contains metallic flake pigment (CX-10, col. 1, lines 1-8, col. 2, lines 3-10).

156. Grunzinger persuasively testified that the Palmquist '800 patent describes an "exposed lens retroreflective sheeting" and also that a Palmquist U.S. patent 2,407,680 which issued on September 17, 1946 teaches an "enclosed lens retroreflective sheeting"; that while the bead binder layers, as well as other layers of the products taught in those patents can be curable, there is nothing in either patent to suggest that curing of the bead binder layer increases the adhesion of that layer to adjacent layers; that in fact, the particular curable binder material used in the '800 patent at column 9, lines 3-9 will act as a release coating with respect to acrylate based materials, and therefore, the use of the binder material in the McKenzie '178 type product would be expected to result in low adhesion (Grunzinger CX-198 at 8 CX-10, 16).

157. Grunzinger persuasively testified that the products taught in the two Palmquist patents are fundamentally different from the encapsulated lens products of the '159 patent; that the Palmquist products do not have a cover film in spaced relation from a bead binder layer and do not have a network of narrow intersecting bonds such as in the '159 patent; and that he sees nothing in those patents that teaches or suggests the increased adhesion obtained by the '159 patent between a binder material thermoformed into contact with a cover sheet upon curing of the binder material (Grunzinger CX-198 at 9).

158. Smook testified, relying on the following portions of the Palmquist '800 patent in col. 3 starting at lines 35 and 68:

> The latter [minute transparent spheres] are pressed in while the binder coating is still in a plastic condition (before curing) and the back extremities touch the underlying transparent color film. The binder coating at

this stage is in a relatively soft or plastic condition so as to permit of the structural transformation still to be described, but is sufficiently cohesive to hold the spheres in position.

* * *

The sheet is heated to fully cure the binder coating 26 and to anneal the cushion layer 23', and upon cooling it is in stablized condition ready for use.

That seems to me to be pretty clear cut, Your Honor.

JUDGE LUCKERN: So what you would say is that a person, again the problem in McKenzie, again is at Column 6, no.

THE WITNESS: Yes, Column 6 is correct, Your Honor.

JUDGE LUCKERN: Starting at around Line 20.

THE WITNESS: That's right. 21.

JUDGE LUCKERN: The Palmquist recitation which you've just read would be a suggestion to solve that problem

THE WITNESS: Yes sir.

(Smook Tr. at 1617, CX-10).

159. U.S. Letters Patent No. 3,795,435 (the '435 patent) issued on March 5, 1974 to Kurt Schwab. The '435 patent, titled "Reflex Light Reflection Sheet and Method For Its Manufacture" is based on an application filed October 8, 1970 (CX-11).

160. It is said in the '435 patent that the improvement is that a spacer layer is a transparent plastic foil of substantially constant thickness with said foil, throughout its thickness, snugly conforming to and bearing against the rear contour of the spherical bodies and with said spacer layer having a vacuum deposited material on the surface opposite the spherical bodies (CX-11 at col. 9).

161. Grunzinger persuasively testified that the '435 patent describes an enclosed lens retroreflective sheeting that has a preformed film as a spacing layer; that in making the sheeting, glass beads are adhered to the preformed spacing film by adhesive layer; that when the spacing film is brought into conformation with the backs of the beads, the adhesive layer is displaced from in back of the beads to an area between the beads as shown at column 6, lines 5-12 and figures 4 and 5; that presumably, it is the adhesive film, and its displacement, that is the reason for respondents' citing this reference, but Grunzinger see no relevance of this teaching to the '159 patent; that first and foremost, there is no thermoforming of the adhesive film into contact with a cover sheet, and no suggestion of the teaching of the '159 patent of increasing adhesion to the cover sheet upon curing of a binder material thermoformed into contact with the cover sheet; that based on Grunzinger's experience with polyurethane chemistry, the urethanes taught by Schwab would be unsatisfactory in an encapsulated lens sheeting as taught by the '159 patent; that the "Desmophen" ingredients referred to in Schwab at column 5, lines 30-45, form polyester type polyurethanes, and Grunzinger has found that polyester polyurethanes do not develop good adhesion to acrylic based sheetings such as the polymethylmethacrylate top film used in the '159 patent; that in fact Grunzinger has used acrylic based layers as release layers in casting films of polyester polyurethanes; that the polyester polyurethanes used by Schwab are based on aromatic isocyanates and the exposure of such a polyester polyurethane to sunlight through the transparent cover sheet of an encapsulated lens sheeting would cause the polyurethane to become yellow and would discolor the sheeting; that the polyester polyurethane described in column 5, lines 30-45 of the Schwab patent is a very soft

material and becomes very fluid upon elevation of temperature and that this fluidity is undoubtedly desired by Schwab to allow the adhesive film to flow away from the backs of the beads as described in column 6, lines 5-12 of Schwab but would be the unsuitable for the manufacture of the '159 sheeting where there must be only a controlled thermoforming of binder material into a network of shaped retained narrow width bonds; and that Grunzinger does not believe Schwab's polyurethane adhesive film would be capable of forming a self-supporting network of narrow intersecting bonds to a cover film (Grunzinger CX-198 at 9, 10, CX-11).

162. Smook, referring to those portions of the '435 patent at col. 6, lines 5 to 12 and at col. 7, lines 44 to 47, viz.--

> It will be noted that the application of pressure or vacuum, which causes the deformation of the foil 11 from its planar shape into the shape shown in FIG. 5, at the same time causes displacement of the adhesive film layer 12 into the equatorial transition zone between front and rear hemispheres of the beads 13 so that the foil 11 directly contacts the rear contours of the beads 13.
>
> * * *
>
> Upon evaporation of the solvent and curing of the lacquer at elevated temperatures, for example 120° C, a weather resistant cover or protective layer 15 (see FIG. 6), in a thickness of about 30 g/m^2 remains.

--testified that said passages address the problem in the McKenzie '178 patent (Smook Tr. at 1618, 1619, CX-11).

163. As to the Schwab '435 patent and the Palmquist '800 patent, Smook testified:

> THE WITNESS: Admittedly the other two, Schwab and Palmquist, are enclosed lens sheeting so they don't have the cellular-like structure. But what they did was to go to a crosslinked structure in order to consolidate the cover sheet which is now a solid cover sheet not with

cells. Then you go on to McKenzie where the cells are described, the cellular structure, and that's where the delamination is coming in with a thermoplastic binder.

So to make the transition between the thermoset or cured material that's in Palmquist and Schwab, to the problem as outlined in McKenzie, is another simple transition.

Now if they didn't do that they'd then look at other systems with crosslinked adhesives or binders which would weld two layers together, and that's what is demonstrated in both Frigstad and Lemelson.

JUDGE LUCKERN: And by Frigstad you're referring to Column 1 that starts around Line 45?

THE WITNESS: Yes, that's correct.

(Smook Tr. at 1616).

164. U.S. Letters Patent No. 2,956,904 (the '904 patent) issued on October 18, 1960 to J.O. Hendricks and is assigned on its face to complainant. The '904 patent is based on an application filed on Nov. 4, 1954 and is titled "Pressure-Sensitive Adhesive Tapes". According to the '904 patent an adhesive coating composition is subjected to a physical treatment involving the use of irradiation. There results pressure sensitive adhesive tapes said to have improved and novel adhesive characteristics. The '904 patent does not disclose a retroreflective sheeting (CX-12, col. 1, lines 15-21).

165. Grunzinger testified that the Hendricks '904 patent describes electron beam crosslinking of a pressure sensitive adhesive to increase "cohesion" of the adhesive without decreasing its "adhesion"; that pressure sensitive adhesives have nothing to do with the cured binder materials of the '159 patent; that pressure sensitive adhesives are typically removable from a surface as shown at column 1, lines 63-69 of the '904 patent while the binder

material of the '159 patent is intended to provide a permanent bond; that the pressure sensitive adhesive of the '904 patent debonds from an adherent rapidly at 120 degrees F as shown at column 4, lines 56-61 and that such debonding would be intolerable for the '159 invention which seeks to provide a product having a ten-year life capable of long exposures at 120 degrees F. A further distinction between the '904 patent and the '159 patent is said by Grunzinger to be that there is no thermoforming in the '904 patent followed by crosslinking, and in fact, the '904 patent crosslinking is performed before the material is used as an adhesive (Grunzinger CX-198 at 10, 11).

166. As to the Hendricks '904 patent Smook testified:

> THE WITNESS: On Hendricks, Column 2, Your Honor, Line 37. "In short, there has been no known simple way to greatly increase the internal strength properties of a pressure sensitive adhesive. That is the property of cohesion which is required for a strong bond without in some way affecting adhesion which is required for any bond at all." This is kind of what I've been saying off and on during the hearing, Your Honor.
>
> Then if you drop down to Line 48, "The rubber resin type pressure sensitive adhesive tapes obtained by the practice of this invention have outstandingly tough cohesive strength properties in combination with high adhesive strength properties, a combination not found in any light formulation identical components in the prior art. It should also be noted that excellent control of the various characteristic properties of pressure sensitive adhesive tapes are possible by the teaching hereof."
>
> Then the top of Column 3, Your Honor, the third line, "High energy electron irradiation of adhesive layers to gain the improved results of this invention may be accomplished in a variety of specific ways."
>
> I think that's all I want to call your attention to.
>
> JUDGE LUCKERN: Again, It's your testimony that those areas would suggest to this man that you're talking about how to solve the problems in McKenzie and that's outlined again in Column 6 that we referred to?

THE WITNESS: Yes, Your Honor. It would take a combination of the two, however.

(Smook Tr. at 1619, 1620, CX-12).

167. Wallace Karl Bingham is presently employed as Division Scientist in the Safety and Security Systems Division of 3M Company. He began work with 3M in 1957 after having graduated from Oregon State University with a Bachelor of Science Degree in Inorganic Chemistry in 1956 and a Master of Science Degree in Inorganic Chemistry in 1957. He was hired first as a Chemist, and subsequently became an Advanced Chemist, a Supervisor, a Research Specialist (in 1969), a Senior Specialist (in 1972) and Division Scientist (in 1983) (Bingham CX-50 at 1).

168. From 1967 to 1969, as Supervisor of Research and Development for "Scotchlite" Brand Reflective Sheetings, Bingham was responsible, among other projects, for research on the high intensity product. In 1969 he was assigned the task of performing laboratory work necessary to bring high intensity sheeting to the market in a form that it could be applied over the full surface of an interstate type traffic sign (Bingham CX-50 at 1, CX-190).

169. Bingham has worked with retroreflective sheeting during his entire career at complainant, and worked on high intensity sheeting from 1967 to 1973. This product was the product described in the McKenzie '178 patent. He is familiar with the materials used in the manufacture of high intensity sheeting according to McKenzie that was then sold by complainant. The binder material of the McKenzie type high intensity retroreflective sheeting sold by complainant did not have any thermosetting constituents and was not cured (Bingham CX-50 at 1, CX-190).

170. At the time Bingham became responsible for research work on the McKenzie type product he was aware that ever since the original manufacture of high intensity sheeting, there had been concern about the seal strength between the cover film of the product and the underlying base sheet or binder material of the product (Bingham CX-50 at 1).

171. Bingham testified that the seal strength problem continued, and was a concern throughout Bingham's involvement with high intensity sheeting; that at times there would be a belief in the laboratory that the problem had been solved, as by edge sealing, or by use of new resins but after some period of time, it would be recognized that seal strength was still a problem and new efforts were made to attempt to solve the problem (Bingham CX-50 at 2; CX-52,; CX-53, CX-55, CX-56, CX-57, CX-58, CX-59, CX-60, CX-61).

172. Despite the various efforts that were made, Bingham testified that there never was a truly satisfactory solution to the seal strength problem; that some progress was made so that the product was sold in increasing volume and for wider usage but that there was always recognition that seal strength was not adequate -- either the initial seal strength of the product coming out of the factory was not high enough, or there was concern that the seal strength would not be retained over the intended life of the product; and that in fact, the concerns were great enough that there were serious discussions about terminating the product because of the seal strength problem (Bingham CX-50 at 3, 4; CX-61 at 4).

173. The problem of inadequate adhesion or delamination did not come to the fore at complainant until approximately 1973 or 1974 (Bingham Tr. at 111, 112).

174. Bingham left the program in 1973, and he testified that seal strength was still a problem then; and that shortly before leaving the program, he suggested that other binder materials should be tried in an effort to obtain a high and constant seal strength (Bingham CX-50 at 4; CX-62).

175. Bingham is not familiar with the structure of the '159 patent shown at the bottom of RPX-41 (Bingham Tr. at 156).

176. Enclosed lens sheeting is a product that has been made by complainant since prior to 1970 (Bingham Tr. at 158, 159, 160).

177. Enclosed lens sheeting (e.g. RX-8) is sheeting in which spherical glass elements are completely enclosed in a resinous binder, i.e. totally surrounded by a resinous binder (Bingham Tr. at 158, 159, 203).

178. A transparent cover sheet covered the binder material and the retroreflective beads in the enclosed lens sheeting (Bingham Tr. at 160).

179. The McKenzie '178 sheeting is a cellular type material where the top sheet is a transparent material bonded to a thermoplastic cushion coat material with the glass beads hermetically sealed (air-tight or impervious to external influence) in small cells (Bingham Tr. at 161, 162).

180. Bingham testified:

> A. Well, I think that we could probably clarify it a little bit. My knowledge now of the history of what happened then perhaps is a little different than it was on January 7th [when he was deposed], as I have gone through my files. And I do find that in fact the concern over seal strength [strength with which the construction holds the cover sheet] as it was produced on these kinds of products as well as having seen some reduction in seal strength was evident earlier than my involvement in 1967. Now that is really after I think about it not that much of a surprise to me, because I no doubt knew it at the time.

(Bingham Tr. at 176, 178).

181. In the early seventies because the signs had been out for some years the wholesale removal of the face or large pieces of the face (cover sheet) from the signs became most evident (Bingham Tr. at 176, 178).

182. According to Bingham most of the time the term "delamination" refers to the removal of the top or cover film from the remainder of the construction of the McKenzie Type material. On occasions reference has been made to delamination or separation in other layers of the same material (Bingham Tr. at 177).

183. RX-43 had to do with applying a version of the McKenzie type material in a vacuum bag applicator. There is a reference to shrinkage or pull back of the cover sheet when it is heated to excess temperatures which is in the order of 230 degrees Fahrenheit and above. Reference is made also to 210, 250 and 270 degrees Fahrenheit which were vacuum bag applicator temperature settings. Bingham testified that an item of greatest significance from the work was that one could not use temperature up to 270 degrees Fahrenheit for applying the sheeting with a new type of adhesive (Bingham Tr. at 184, 188 to 192).

184. Bingham denied that the work in RX-43 stood for the proposition that the shrinkage of the cover film was a significant problem in connection with delamination of the cover sheet from the binder material. He also did not think that the work showed that one of the problems that caused delamination was the fact that the cover film would shrink in sunlight. There was suggested a solution to the problem by putting ultraviolet absorbing ingredients into the cover film to prevent degradation of the cushion coat material (Bingham Tr. at 192, 193).

185. Interface adhesion to Bingham meant the location of the adhesive as it contacts the metal film blank with reference to RX-43 (Bingham Tr. at 194).

186. Bingham's understanding of the term "interface adhesion" is the general area between two layers. To Bingham, the term "interphase" means some mingling took place between molecules or layers. Interphase and interface mean about the same thing to Bingham (Bingham Tr. at 195, 195).

187. According to Bingham RX-43 showed that one must be careful in the application of complainant's dry slidable type 2 adhesive in vacuum bag applications because at the very high temperatures, 250 degrees and above, there is significant shrinkage (Bingham Tr. at 197).

188. According to Bingham most of the time the term "delamination" refers to the removal of the top or cover film from the remainder of the construction of the McKenzie Type material. On occasions reference has been made to delamination or separation in other layers of the same material (Bingham Tr. at 177).

189. RX-43 had to do with applying a version of the McKenzie type material in a vacuum bag applicator. There is a reference to shrinkage or pull back of the cover sheet when it is heated to excess temperatures which is in the order of 230 degrees Fahrenheit and above. Reference is made also to 210, 250 and 270 degrees Fahrenheit which were vacuum bag applicator temperature settings. Bingham testified that an item of greatest significance from the work was that one could not use temperature up to 270 degrees Fahrenheit for applying the sheeting with a new type of adhesive (Bingham Tr. at 184, 188 to 192).

190. Bingham denied that the work in RX-43 stood for the proposition that the shrinkage of the cover film was a significant problem in connection with delamination of the cover sheet from the binder material. He also did not think that the work showed that one of the problems that caused delamination was the fact that the cover film would shrink in sunlight. There was suggested a solution to the problem by putting ultraviolet absorbing ingredients into the cover film to prevent degradation of the cushion coat material (Bingham Tr. at 192, 193).

(There are no FF 191 to 193).

194. As to the signs in the field, Bingham testified that it was known that one could approach 150 to 160 degrees Fahrenheit in certain parts of the United States on rare occasions (Bingham Tr. at 199).

195. In an exposed lens system the reflective elements are exposed to air (Bingham Tr. at 203).

196. In the early seventies Bingham had no knowledge of any dimensional changes of the signs in the field as far as shrinkage of the cover sheet. At the time the lab he was in did study field samples (Bingham Tr. at 204).

197. Delamination problem of the McKenzie '178 sheeting in the field was not caused by shrinkage of the cover film because any significant shrinkage in complainant's weathering tests and in its failed signs was never measured (Bingham Tr. at 221).

198. At 160 degrees Fahrenheit biaxially oriented film of a cover sheet will not generally shrink sufficiently enough to cause any degree of alarm or any degree of failure in the McKenzie '178 material (Bingham Tr. at 222).

199. It never occurred to Bingham when he was working in the field to solve the reported problem by using a curable or cross-linked binder in the sheeting (Bingham Tr. at 222).

200. According to Bingham who is familiar with the enclosed lens type of sheeting such as the Palmquist sheetings, there is very little similarity between the construction of the enclosed lens sheeting and the encapsulated lens type sheeting as shown by McKenzie '178 patent (Bingham Tr. at 222, 223).

201. In the manufacture of enclosed lens and encapsulated lens sheetings there is a bead bond layer. In the finished products the bead bond layer in the enclosed lens material becomes a part of essentially the rest of the resinous material so that it is no longer a separate entity (Bingham Tr. at 223, 224).

202. In the enclosed lens construction of Palmquist, there is a layer into which beads are dropped. The beads are for the purpose of reflecting light. Also there is a cover over the bead bond layer. The same is for the McKenzie sheeting and both sheetings are retroreflective sheetings. In the Palmquist enclosed lens structure, the cover layer is cured (Bingham Tr. at 225, 226).

203. Prior to 1973 Bingham was aware that complainant had an enclosed lens structure (engineer grade) that had a binder layer and a cover sheet that were both cured (Bingham Tr. at 228, 229, 230, 231, 232).

204. The dollar value of complainant's sales of high intensity product from 1980 thereafter, the year where high intensity sheeting was introduced, show an in such sales, particularly

as compared with rates from the proceeding years 1978 onward, as shown below:

(CX-35; RX-43).

205. Bingham testified that in the enclosed lens art and its products his understanding has never been that curing the various layers was the primary or even the secondary reason for obtaining adhesion between those layers. The reason the layers were cured was to provide for a stabilized film product that would retain its dimensional stability through weathering - - that is the optics are such that the dimensional stability of the resinous materials obtained in the particular construction had to remain in effect throughout the functional life of the sheeting. Bingham testified in order to provide that a curing system had to be used. There was never a thought behind curing as it relates to interply adhesion or surface to surface adhesion within that construction (Bingham Tr. at 245).

206. Enclosed lens sheeting was manufactured at least in 1973 and earlier by a coating operation and when the top film is coated out it is a liquid and when the solvent is driven off it becomes a solid and Bingham

suspects partial curing is obtained. The second layer, another liquid, is applied. Then beads are applied over the layer and then another layer is applied which is also a liquid and which forms part of the optical system and further dried and further cured. Then a metallic layer is applied which forms another part of the optical system and then a final layer is applied which is the adhesive system. The finished product is fully cured (Bingham Tr. 246 to 253, 258, 260, 261, 262, 263, CPX-85, CPX-3).

207. In the manufacture of the enclosed lens sheeting the positioning of the metal with respect to the beads that reflect the light is very critical. If it shrinks or expands it can effect the reflectivity of the sign. The curing was to maintain the critical spacing in the optical system (Bingham Tr. at 356, 257).

208. Encapsulated lens retroreflective sheeting was first developed by a Eugene McKenzie (an employee of complainant) in the early 1960's. This sheeting had the advantages of high reflectivity and brightness similar to that of the exposed lens sheeting. The cover sheet protected the partially exposed glass beads from the elements (Richelsen CX-17 at 5).

209. The McKenzie type high intensity retroreflective sheeting, which was first marketed in about 1961, had a severe delamination problem. The cover sheet of the product would peel away, allowing moisture inside the cells and reflectivity was lost in the same manner as the exposed lens construction. The delamination problem was experienced in a significant number of field installations (Richelsen CX-17 at 5-6).

210. CPX-5 is an example of the McKenzie type sheeting which was installed in the field in about 1979 and removed in 1985. The peeling away of

the top film or cover sheet from the base sheet is readily apparent (Erickson CX-79 at 9; CPX-5).

211. Because complainant had predicted a longer life for the McKenzie type sheeting, complainant has replaced that sheeting including having the sign itself removed and remounted. Complainant's costs for sign replacement have now totaled over In addition, complainant has supplied at no charge over square feet of replacement sheeting for the defective McKenzie type product (Richelsen CX-17 at 6).

212. Among the attempts to solve the seal strength problem was the development and use of different resins (Bingham CX-50 at 2; CX-52; CX-53).

213. Other attempts were directed toward (Bingham CX-50 at 2; CX-54; CX-55).

214. Experiments were conducted where were used to attempt to improve adhesion between the cover film and binder material. Another attempt was made to improve adhesion by into the binder material. The experiments were unsuccessful (Bingham CX-50, at 3; CX-57; CX-56).

215. Through 1971 various other efforts were made to overcome the continuing seal strength problem. Those efforts included to the binder material; development of a new resin systems; examination of the effect on seal strength of of the binder material; efforts to improve seal strength by variations; the binder material; and including within the product. Despite those

attempts at 3M there was never a truly satisfactory solution to the seal strength problem. The concerns were great enough that there were serious discussions about terminating the product (Bingham CX-50 at 3, 4; CX-58; CX-59; CX-60; CX-61).

216. In addition to the money that complainant was losing from repairing signs that had failed, the problem became an embarrassment to complainant. Had the delamination problem not been ultimately solved, there was a high probability that the product would have been withdrawn from the market because of what the continuing problem might have done to complainant's reputation in the market (Richelsen Tr. at 144).

217. When Bingham left the program in 1973 seal strength remained a problem. In 1973 complainant was making and selling in the United States an enclosed lens construction that had a bead bond layer and cover layer both of which were cured (Bingham CX-50 at 4; Bingham, Tr. at 230).

218. In the several years that Bingham was personally working on attempting to solve the delamination problem of the McKenzie sheeting it did not occur to him to solve the problem by using a curable or cross-linked binder in the sheeting. The enclosed lens type sheeting has very little similarity to encapsulated lens type. Curing in the enclosed lens sheeting is done to stabilize the film product so that it retains its dimensional stability through weathering. The optics of the enclosed lens sheeting are such that the dimensional stability of the binder material had to remain in effect throughout the functional life of the sheeting (Bingham Tr. at 222-223; Bingham, Tr. at 245).

219. The '159 invention solved the field delamination problem of the McKenzie high intensity product. The '159 product was introduced in 1980 and has reduced the field delamination problems to virtually zero. Complainant has received complaints related to sheeting made according to the '159 patent compared with the hundreds received for the McKenzie type product. Complainant now warrants its high intensity retroreflective sheeting for ten years on durable sign market applications (Richelsen CX-17 at 6-7; CX-22; CX-23).

220. CPX-6 is a stop sign using '159 type high intensity retroreflective sheeting that was installed in Tampa, Florida in June of 1980. The sign was removed in January 1988. After almost seven-and-one-half years of field exposure the sign showed no evidence of delamination (Erickson CX-79 at 9; CPX-6).

221. While complainant's sales of high intensity type sheeting increased from 1973 to the introduction of the '159 type sheeting in 1980, since that introduction in 1980 the sales of complainant's high intensity retroreflective sheeting of the '159 type have grown substantially. Ever increasing numbers of reflective sheeting users have chosen larger amounts of high intensity sheeting because of its higher brightness and durability over the engineer grade. The growth has continued even though the engineer grade sheeting is much lower in cost. Further, the use of high intensity sheeting has increased even though the price of the engineer grade sheeting has steadily declined making the option of choosing the engineer grade even more attractive (Richelsen CX-17 at 7; Voves CX-104 at 6; CX-109; CX-110; RX-42; CX-35).

222. The '159 invention has greatly contributed to the sizable increase in high intensity usage because it has removed the field delamination problem that threatened to limit the utility of the high intensity sheeting (Richelsen CX-17 at 7).

223. Randall L. Erickson is employed by complainant in the capacity of Technical Director of the Traffic Control Materials Division. He was hired by complainant in 1967. At that time he worked as a chemist in the adhesive Coating and Sealants Division. He became a laboratory supervisor in the Building Services and Cleaning Products Division in 1968 and in 1973 he was transferred to Safety and Security Systems Division as a laboratory manager. In 1982 a segment of the Safety and Security Systems Division was combined with the Traffic Control Materials ("TCM") Division, and he then joined the latter division. Erickson became Technical Director of the Traffic Control Materials Division in 1984 (Erickson CX-79 at 1, Tr. at 810).

224. Erickson obtained a Bachelor of Arts degree from Concordia College in 1961. His undergraduate major was chemistry. He obtained a Ph.D. from North Dakota State University in physical chemistry in 1965 (Erickson CX-79 at 1).

225. As Technical Director, Erickson's responsibilities include the division research and development activities as well as other technical matters such as technical service in connection with products sold by the division and product maintenance, i.e., finding substitute raw materials if existing raw materials become unavailable or unsalable. In this role he also has responsibilities relating to patent matters within the division and specifically in making recommendations regarding the filing of patent

applications based upon inventions made within the division (Erickson CX-79 at 1).

(There is no FF 226 to 227).

228. Erickson testified that complainant has made some product improvements in high intensity sheeting, besides the improvement covered by the '159 patent, as a result of its research and development efforts; that complainant developed an improved adhesive making it easier for the end user to apply the sheeting to a sign blank; that an improved, more flexible top film was developed for some product versions, providing a sheeting that is better able to withstand the rough handling of the construction work zone; that complainant has developed inks for application to the cover fil to provide color and graphic images, which are capable of withstanding extended exposure to sunlight without significant degradation of their characteristics; and that complainant also has made improvements in the glass beads used in high intensity sheeting (Erickson CX-79 at 3).

229. Erickson first became involved in the subject matter of this investigation in around mid-1983. At that time Biersdorf, which he understood to be the European distributor or sales agent for Seibu, came to complainant asking complainant whether it would agree that the high intensity sheeting being developed by Seibu was not infringement of the '159 patent. Complainant was provided with a sample and Erickson was responsible for coordinating an analysis of that sample. CX-81 is a report that Erickson prepared which summarizes initial conclusions and opinions concerning the '159 patent and the question of infringement by Seibu (Erickson CX-79 at 4).

230. After indicating to Biersdorf complainant's view that the Seibu product was an infringement of the '159 patent, complainant was invited to attend a meeting between Biersdorf and Seibu personnel in Japan in January, 1984. Erickson attended that meeting along with Mr. Jake Landen who was complainant's group vice president, and complainant's Roger Tamte. Erickson does not recall all of the persons present at that meeting on behalf of Biersdorf and Seibu. However, Exhibit CX-82 is the agenda of the meeting and alist of attendees (Erickson CX-79 at 4).

231. At the meeting in January 1984 there was discussed a number of issues relating to the '159 patent and the question of infringement. At the conclusion of the meeting, it was Erickson's understanding that the parties, including Seibu, agreed that to help resolve the issue of infringement tests would be conducted by Seibu; and that these tests would measure whether the Seibu product exhibited increased adhesion between cover sheet and binder material recited in the '159 patent, i.e., increased adhesion from the time the binder material was thermoformed to the time the binder material was cured (Erickson CX-79 at 4, 5).

232. In about May, 1984 Seibu reported to complainant as having conducted a heat shrink test likened to that to Example 12 of the McGrath patent. However, Erickson testified that the heat shrink test reported by Seibu did not provide meaningful results, because the Seibu product has a cover film that is nonoriented and therefore does not shrink when heated; and that since no shrinkage force arises within the cover film, no stress is applied to the bonds between the cover sheet and binder layer. Erickson testified that it was a misnomer to call the Seibu test a heat shrink test,

because the test did not apply a shrinking force that stresses the bonds to be tested (Erickson CX-79 at 5).

233. Erickson testified that while complainant had expressed its opinion to respondents at the January, 1984 meeting that the increased adhesion that is referred to in the '159 patent could be measured by any one of the three tests that were set forth in the patent (the peel test, the razor blade test, and the heat shrink test), Erickson specifically stated in the January, 1984 meeting that the heat shrink test would not apply when using a nonoriented top film which was the construction of top film being used by Seibu; and that in the January 1984 meeting Erickson had emphasized that the primary tests for showing increased adhesion were those described in Examples 1 and 11 of McGrath (Erickson CX-79 at 5)

234. CX-83 is Erickson's memo to Mr. Landen regarding the information that complainant received from Seibu in May, 1984. Erickson testified that in June, 1984 he participated in a telephone conference call to Stuart Lubitz, the attorney for Seibu at which Messrs. Kobayashi and Ebihara of Seibu were present during this telephone conference; that complainant told Mr. Lubitz that the heat shrink test submitted by Seibu was not adequate to determine the infringement issue because Seibu used a nonoriented cover film; that Lubitz suggested conducting a peel test to measure the adhesion between the Seibu cover film and the binder material, both before and after curing of the binder material; that Erickson understood Lubitz to state during that conference call that Seibu did not have the equipment to conduct such a test; and that Lubitz asked for complainant to submit the type of test and equipment that complainant believed would be conducted. CX-84 is said to be a

memorandum prepared at the time summarizing that telephone conference (Erickson CX-79 at 5, 6).

235. Subsequent to the telephone conference Erickson testified that complainant's Grunzinger prepared a detailed test procedure for Seibu's use and that CX-85 is a copy of that test procedure which was sent to Seibu. However, to Erickson's knowledge Seibu never conducted a peel test. Erickson testified that the reason Seibu gave for not conducting the test was that a peel test did not measure "interface" adhesion, which Seibu stated should be measured; that this reason was given even though the heat shrink test that it had previously reported, if it had been what it purported to be, would have been no more effective in measuring "interface" adhesion; and that instead, a true heat shrink test would have measured the overall resistance to separation of the cover film from the binder material, just as a peel test would measure it (Erickson CX-79 at 6; CX-144).

236. During the January 1984 meeting Erickson testified that complainant never limited the definition of adhesion, as that term is used in the '159 patent, to mean adhesion at the "interface" only; and that to the contrary complainant specifically recommended conducting the very peel strength test that Seibu is now claiming would not measure "interface" adhesion (Erickson CX-79 at 7).

237. Erickson testified that through 1985 respondents' Kobayashi and Erickson exchanged several letters regarding the test that complainant suggested be conducted on the Seibu product; that in those communications Erickson reiterated complainant's position that the Seibu product should be tested according to the peel strength test specified in the '159 patent while

Kobayashi in effect, refused, on the stated ground that the test set forth in the '159 patent would not measure the "interface" adhesion; that accordingly Erickson understood that Seibu or Kobayashi was not going to conduct the test that complainant suggested, and that Seibu did not provide complainant with any peel strength test results (Erickson CX-79 at 7).

238. Erickson testified that in the meantime complainant's Grunzinger continued work on the analysis of the Seibu product and replications of the product; that Grunzinger's work established that the Seibu "Ultralite" sheeting was a violation of the '159 patent; and that it was on the basis of that analysis that the recommendation was made to file a complaint at the Commission against Seibu (Erickson CX-79 at 7).

239. As Technical Director of the TCM Division Erickson testified that he is familiar with the structure, materials and process of manufacture of high intensity sheeting sold by complainant today. Erickson testified that he has also read the '159 patent; that the high intensity sheeting sold by complainant as the 2870, 3870, 2820 and 3820 series are all products made according to the teachings of the '159 patent; that, each of them has a structure, as shown in Figure 3 of the '159 patent, comprising a base sheet having a layer of glass microspheres (item 16 in the '159 patent) disposed over one surface of the base sheet and coated on their back surface with a layer of vapor-coated metal (item 17) to make the microspheres serve as a retroreflective element; that a cover sheet (item 12) is disposed in spaced relation from the layer of the glass microspheres; and that a network of narrow intersecting bonds (item 13) extends between the cover sheet and the base sheet so as to adhere the two sheets together and form a plurality of

cells in which the glass microspheres are hermetically sealed. The sheeting is said by Erickson to be manufactured "in general accordance" with the procedure described in Example 1 of the '159 patent, which involves thermoforming binder material from the base sheet into contact with the cover sheet so as to form the described narrow intersecting bonds. After thermoforming, the binder material is said to be cured in situ by exposure of the sheeting to radiation, and specifically electron beam radiation. Erickson testified that binder material used in complainant's high intensity sheeting is a material that shows increased adhesion to the cover sheet after curing over the level of adhesion after thermoforming but before curing; that the binder material comprises an acrylic-based ingredient, namely an acrylate polymer and an acrylate monomer; and that the cover sheet also comprises an acrylic-based ingredient, namely polymethylmethacrylate (Erickson CX-79 at 7, 8).

240. Erickson testified that under his direction complainant obtained from the field samples of signs that used both McKenzie '178 type retroreflective sheeting, i.e., the high intensity sheeting sold by complainant prior to the '159 invention, and the '159 type sheeting; that CPX-5 is 30" stop face having McKenzie type sheeting; that this sign was installed in Ramsey County, Minnesota in about 1979 and was removed in 1985; that after approximately six years in the field the delamination problem, i.e. are the peeling away of the top film or cover sheet from the base sheet, was obvious; that CPX-6 is a 30" stop face using McGrath type high intensity sheeting that was installed in Tampa, Florida in June 1980; that at complainant's request, in connection with this investigation, the sign was

removed in January 1988; and that after about seven-and-a-half years in the field the sign shows no evidence of delamination (Erickson CX-79 at 9).

241. The Traffic Control Materials Division of complainant is the division which manufactures retroreflective sheeting that is sold in competition with respondents' sheeting in issue (Erickson Tr. at 688).

242. Erickson ran the razor blade test recited in col. 7, line 18 of the '159 patent last week. The running of the test was suggested by attorneys representing complainant. Erickson has run a test like the razor blade test on high intensity sheeting two, three four years ago. In the test run then Erickson tried to separate a finished product with a razor blade. The test was not exactly as described in Example 1 of the '159 patent. Erickson has seen people run the test as described in Example 1. Erickson does not believe his deposition testimony is inconsistent because he testified at the deposition that he knew McGrath ran the test specifically as it was described in Example 1 but that he did not know of anyone else at that time who had run the test specifically as McGrath had run it. Erickson testified at the hearing that razor blade tests are common to try to separate materials; and that he saw somebody run the razor blade test described in Example 1 of the '159 patent prior to last week and he believes it might have been Ray Grunzinger or Grunzinger's technician or another technician called Tim Skoglund (Erickson Tr. at 701, 702, 703, 708, 709, 710).

243. McGrath testified that there are several different ways to run the razor blade test. He would say two different ways. One way was seen on the video tape CPX-70. Erickson would do it slightly differently. He would try not to let the edge of the sample be a factor in determining whether he had increased adhesion. He testified that often times one can have an edge

effect that does not really represent what the material is like in the middle. Thus Erickson would try to get to the middle of a sample and start the test in the middle by cutting a "V" (Erickson Tr. 710, 711 to 714; RPX-45).

244. Erickson believes that a "V" razor blade test can be used to help discriminate and to screen candidate materials which is what the intent of the McGrath '159 test was (Erickson Tr. at 714, 715).

245. Erickson became acquainted with the "V" razor test in 1973 or 1974. Said test was used extensively on a reflective tire sheeting in connection with an edge problem. As to the edge problem, Erickson testified that what they were trying to do with a product which was a sheeting that was developed to be used on bicycle tires was to make the product reflective. Uncured rubber was used with the sheeting and then under vulcanization conditions of 350 degrees and of very high pressures they would try to bond the sheeting to the rubber while the rubber underwent vulcanization. Generally what would happen is that the rubber would flow up around the side of the sheeting. There were no edges and the sheeting was pressed into the rubber compound. Such a problem according to Erickson does not exist with the encapsulated lens type sheeting (Erickson Tr. at 825, 826).

246. Erickson saw or heard of the razor blade test being run in 1973, or 1974 on an exposed lens retroreflective sheeting product. Erickson obtained the information about running the razor blade test starting from the edge from McGrath (Erickson Tr. at 715, 716).

247. Erickson does not know whether prior to Nov. 1987 he had ever heard or seen the razor blade test being run as he saw it run on video tape CPX-70. He believes that he heard of it being run that way but he does not

really recall that he has seen it being run that way. He thinks he heard about it two or three years ago (Erickson Tr. at 716, 717).

248. RPX-46 is a graphic illustration of the Biersdorf sample that was analyzed by complainant beginning in 1983 (Erickson Tr. at 734, 735).

249. As to the two layers cross-hatched in green on RPX-46, Erickson testified that those layers to his understanding do not still exist in the respondents' "Ultralite" or encapsulated lens sheeting. The only place they ever existed, according to Erickson, was in the sample provided complainant from Biersdorf (Erickson Tr. at 827).

250. In 1983 Erickson knew from a report (RX-44) that respondents' enclosed lens sheeting had a top coat that was a cured acrylic-based melamine resin and it had a bead bond layer that was similar as the top coat material by analysis (Erickson Tr. at 748, 749, 750, 757).

251. As to RX-44, and page 6 of that exhibit Erickson does not know the parts or percentages of certain materials under E and he does not know the parts or percentages of the materials under F (Erickson Tr. at 827, 828).

252. To Erickson's satisfaction, towards the middle or end of 1984 Grunzinger was able to simulate respondents' material to determine whether adhesion was increased after curing as compared to before curing (Erickson Tr. at 760).

253. A Grunzinger report (RX-41), as to a simulated product of respondents, indicates that with curing the cushion coat with isocyanate crosslinker actually decreased in adhesion value. Erickson however testified that the problem was that complainant still did not know what the binder material was with respect to respondents' composition so that complainant could actually run the material before curing (Erickson Tr. at 763, 764).

254. To determine whether adhesion had increased or decreased after curing as compared with before curing, when binder material is received from respondents Erickson would do a razor blade test and a tensile peel test. For such tests Erickson would need both binder materials of respondents including whatever is used in the binder materials as titanium dioxide and also respondents' cover film and process conditions for making the product including time and temperature conditions (Erickson Tr. at 765. 766, 767, 790, 791, 792, RPX-47).

255. Erickson would not need all the materials on RPX-47 if he had received before cure and after cure material from respondents (Erickson Tr. at 828, 829).

256. According to Erickson, cohesion refers to the internal strength of a material (Erickson Tr. at 795, 797).

257. Cohesion can be determined by measuring the tensile strength of a material (Erickson Tr. at 797).

258. Erickson does not qualify himself as an expert of adhesion (Erickson Tr. at 800).

259. Erickson testified:

> A Again, you know, I don't try to pretend to know things that the experts know about adhesion. I'm not, in fact I'm, you know I really have never really studied the subject.
>
> * * *
>
> A Well I had heard of the word interphase between the deposition time and today, but again, I mean I'm not going to go into the study of adhesives and adhesion. That's not my current job, and I really simply don't have time to do that.

(Erickson Tr. at 803, 804).

260. Internal strength properties to Erickson mean cohesion (Erickson Tr. at 801).

261. The heat shrink test of Example 12 applies if one has an oriented film that would have force associated with it when it is exposed to high temperatures. The tests of Example 1 and 11 are used to measure adhesion in the '159 patent because the test of Example 1 is a qualitative test that allows a person that wishes to use the '159 patent to determine quickly the materials that could be used as a good candidate or that are not a good candidate for a binder material. Once a material is identified that is potentially a good candidate, one makes an encapsulated lens sheeting and tests it by the tensile test as described in Example 11 which would gives a number and would be a quantitative comparison of force to remove before versus after curing. The razor blade test could show whether a specific binder material falls within the claims of the '159 patent but it would be really difficult to so determine. There would still be arguments after the razor blade test as what is good versus better. A number is better to have than an opinion. Thus a person would do the razor blade test and find that a particular binder would work and show increased adhesion and than the person would have to go on and do a peel test to show the bond strength. The first test is a screening test to be able initially and quickly to find materials that could work and would have improved or good adhesion (Erickson Tr. at 819, 820).

262. The razor blade test that Erickson ran last week on complainant's sheeting showed that the sheeting had increased adhesion after curing as compared to the material that was not cured. One test, which was a razor blade test, was on complainant's sheeting that was cured and uncured.

Another test was on complainant's binder material cast onto complainant's cover film and the binder material was in 100 percent contact (Erickson Tr. at 820, 821, 831).

263. Erickson requested complainant's manufacturing facility to take a sample of high intensity sheeting after sealing but before curing and then to take an additional sample after curing and to run the peel test on the two samples. The two tests showed an approximately two-fold increase in adhesion after curing as compared to before curing (Erickson Tr. at 823-824).

264. Erickson ran heat shrink tests on complainant's sheeting in the fall of 1983. They showed the same results as described in Example 11 of the '159 patent (Erickson Tr. at 824).

265. Erickson is of the opinion that the peel test is the best test to determine what increased adhesion is because the peel test gives a number. He does not know if the peel test would work on a solid layer of binder (Erickson Tr. at 825).

266. A razor blade test can be run on an encapsulated sample but it would not be the same as described in Example 1 of the '159 patent. For that, one would need the binder material prior to curing (Erickson Tr. at 830).

267. To determine improved bond strength Erickson said that it could be determined that on the finished product before curing and after curing. To determine increased adhesion, it can be done on a product that has been already thermoformed because there is about 20 to 25 percent contact area and that is a solid area (Erickson Tr. at 832).

268. Erickson testified:

> Q Would you kindly turn to page 219 of your deposition transcript.

(Pause.)

Q I am going to begin on line 3. And inasmuch as we are referring in this testimony to Claim 1, I have placed an enlarged chart, RPX-1, of Claim 1 in front of your witness box there for reference. And would you read this with me, as we have done in the past.

* * *

Q I am speaking here: "Well, he has the claim in front of him. My question was, but he can answer a different question if he likes --" And I might say parenthetically for the record that I was referring to some previous colloquy between Mr. Edell and me, which is irrelevant here.

So I said, "My question was, but he can answer a different question if he likes, whether or not his request to Seibu or suggestion to Seibu to run that peel test or the razor blade test to determine infringement or not was based upon that clause in Claim 1, or was it based on something else in Claim 1, or was it based on something else entirely?"

A "The discussions that we had with Seibu were based on the test methods that are described in the examples."

Q "I understand, but I am not sure that answers my question. I want to know why you thought that the peel test, and you described it to Seibu, would demonstrate whether or not there was infringement?"

A "The peel test would be on the second part of that."

Q "Would you read it?"

A "And further characterized in that the binder material is cured in situ after being thermoformed whereas the bonds had increased bond strength to the cover sheet and base sheet. I think that to my reading that is more a part of the earlier portion that you had stated."

Q "All right. So as to the peel test, you were talking about the clauses that have been labeled cured in situ and increased bond strength?"

A "Correct."

Q "And then you suggested that they do the razor blade test for the purpose of determining whether there was infringement of or correspondence between the clause that is labelled increased adhesion?"

A "Again what I said, just as stated, I think that the razor blade test better describes that part of the sentence and the peel test better describes the last part of the sentence."

Q Now in that testimony, Dr. Erickson, you were referring to the peel test as being used to confirm whether or not this clause was met, "And further characterized in that the binder material is cured in situ after being thermoformed," is that correct?

A Yes.

Q And that the razor blade test was for the previous clause which reads, "Characterized in that the binder material is selected from materials that show increased adhesion to said cover sheet when a solid layer of the material that has been previously laminated to said sheet is cured," is that correct?

A Yes.

Q So in short, you thing that with the qualifications that you gave, you think that in order to demonstrate infringement of Claim 1 that you would have to show by a razor blade test that the first characterized clause was met, and by a peel test that the second characterized clause was met?

A That is what I stated in October, yes.

Q And the peel test would include the whereby clause, "Whereby the bonds had increased bond strength to the cover sheet and base sheet"?

* * *

Q Dr. Erickson, if that is confusing, let me reask the question.

* * *

MR. GARDNER: Yes, I will. Let me do it this way.

BY MR. GARDNER:

Q In your opinion at least as of January of 1988, which is when this second session of your deposition was taken, you thought that to demonstrate infringement of Claim 1 that it would require two separate tests, namely a razor blade test

in order to demonstrate that the first characterized whereby is met, correct?

A Yes.

Q And a peel test to demonstrate that the following language is met, "Further characterized in that the binder material is cured in situ after being thermoformed whereby the bonds have increased bond strength to the cover sheet and base sheet," is that correct?

A That is right. But again, I will qualify. I do not know anything about what really constitutes infringement. I mean that is a legal question. You are asking me a technical question.

(Erickson Tr. at 832 to 836)

269. Erickson at least up until this proceeding began in July 1987 was not familiar with the use of the razor blade test as described in the '159 test by anyone outside of complainant and that is still true today. Erickson has not seen the razor blade test described outside of the '159 patent although he has not looked for it (Erickson Tr. at 837, 838).

270. The binder material which complainant uses today is essentially the same as in several of the '159 examples. It is probably closest to that shown in Example

(Erickson Tr. at 841 to 843).

271. Erickson is of the opinion that one could probably find some people with a Bachelor's Degree that could reproduce examples of the '159 patent. From a technical standpoint a person would have to have a Bachelor's degree or be well read in chemistry to be skilled in the area of high intensity (Erickson Tr. at 846, 847, 848).

272. Chuck Sevelin works on retroreflective sheeting and Erickson does not think he has a degree. He has been working at complainant 35 to 40 years and in the work he has been working in the area of polymeric products such as retroreflective sheeting. He is put on today's problems often because he already has the background or experience. Complainant has classifications for levels of scientists. One starts as a chemist and one works his way up and becomes a senior specialist and then the next level is a Division Scientist and it is between Ray Grunzinger or Sevelin who will be complainant's next Division Scientist (Erickson Tr. 850-853).

VII. DeVries, Sharpe and Smook

273. Kenneth L. DeVries who has a Ph.D. was qualified as an expert for complainant in material science and engineering with a specialty in mechanical properties which includes mechanical properties of polymers and adhesives and adhesive joints and in particular in the testing of these materials (Tr. 513, CX-193).

274. DeVries is familiar with the '159 patent as a result of receiving it in late July 1987 or early August 1987 (DeVries Tr. at 514).

275. According to DeVries the unique thing about the '159 patent is that hermetic seals are formed with a cover sheet through thermoforming in which the binder is selected such that it can be thermoformed and then after thermoforming, the binder is crosslinked to produce an increased bonding with the cover sheet or an increased adhesion (DeVries Tr. at 516).

276. Crosslinked means that the molecular structure is arranged such that the individual molecules are tied together so that there results a network rather than individual long polymer chains. DeVries testified that it becomes what is often called thermosetting as contrasted to thermoplastic i.e, it becomes relatively insoluble as opposed to soluble as a consequence of crosslinking and that it becomes relatively infusible. DeVries makes reference to col. 4, line 10 of the '159 patent wherein it is stated "[t]o complete retroreflective sheeting of the invention, the embossed sheeting is then exposed to a predetermined level of radiation, which causes the binder material 15 to cure to a relatively infusible and insoluble condition" (DeVries Tr. 516, 517).

277. According to DeVries, the term "cure" can have alot of meanings but the '159 patent at col. 2, line 17 to 21 states that "'curing' is used herein to describe chemical reactions of constituent ingredients, such as crosslinking or chain-extension reactions, which result in relative insolubility and infusibility of the cured material" (DeVries Tr. at 518).

278. The phrase "improved adhesion to the cover film" (col. 2, line 46 of the "159 patent) means to DeVries that the cover film is held more tenaciously to the base material (DeVries Tr. at 519).

279. The phrase "interface adhesion" is a term that DeVries does not commonly use but he presumes what is meant by it is that there are some type of inter-molecular forces that hold two faces together. People have referred to the forces as Van der Waals force or dispersive forces (DeVries Tr. at 519).

280. According to DeVries the term "adhesion" as used in the '159 patent means how tightly the cover sheet is bonded to the base material. DeVries states that inventor McGrath in the '159 patent speculated how that

might occur. DeVries referred to col. 2, lines 53 to 60 of the '159 patent. The reference to "greater resistance to a pulling apart of the cover film" is much more than a Van der Waals force (DeVries Tr. at 520, 521).

281. Van der Waals forces are secondary type forces that occur when bringing a couple of molecules together, as contrasted to primary bonding forces such as ionic and covalent and metallic. Van der Waals forces are a type of dispersing forces (DeVries Tr. at 522).

282. Van der Waals forces is one of things that is involved in interface adhesion although DeVries does not believe that interface adhesion is operative. DeVries testified that interface adhesion only makes up a small part of the total strength of an adhesive joint. DeVries thinks that the term "interface adhesion" in the adhesion art is misleading. That term is used however and DeVries is sure that he has used it (DeVries Tr. at 523).

283. With respect to how DeVries interprets "adhesion" in the '159 patent, DeVries thinks that it is a little bit fallicious to talk about an interface in a case like this because that envisons one plane and another plane and even though a mirror looks very smooth, to an atom or molecule a mirror does not look smooth. In engineering a mirror could have very deep caverns or crevices. DeVries believes that in McGrath's thermoforming there may be molecules from the binder migrating into crevices of the cover sheet and, referring to the words of the McGrath '159 patent (col. 2, lines 56, 57), upon the later curing of the bond the migrated material may become more firmly interlocked or intertwined with the moledular structure of the cover film (DeVries Tr. at 524 to 532; CPX-86).

284. The '159 patent describes basically three tests for increased adhesion of the cover sheet to the base material. There is the razor blade test described at col. 7, lines 3 to 22 of the '159 patent The peel test is described in the '159 patent at col. 10, lines 30 to 40. A third test is a shrinkage test and that is found in col. 7 starting at about line 36 (DeVries Tr. at 533 to 536).

285. Neither the razor blade test nor the peel test nor the heat shrink test of the '159 patent will measure interface adhesion which DeVries has defined as molecular or Van der Waals forces (DeVries Tr. at 536).

286. DeVries testified that the razor blade test, the peel test and the heat shrink test described in the '159 patent are very reasonable tests because they measure what the inventor hoped to accomplish by his invention and that is the tenacity with which the base material adheres to the cover sheet. The razor blade test and the heat shrinkage test are called qualitative or screening tests. No numbers are obtained from the tests - only that the film adhered more tightly than that of the base material. The peel test is more quantitative in nature because actual numbers are obtained (DeVries Tr. at 536 to 538).

287. Referring to CPX-86, DeVries testified that there is a boundary between the binder and cover sheet which has become defused and there is no interface there. There is an interphase and what is being measured is the force required to separate one material from another and that involves lots of things (DeVries Tr. at 539).

288. DeVries knows of no tests that can only measure interface adhesion in solids (DeVries Tr. at 540).

289. DeVries testified that there would be Van der Waals forces in the '159 system between the binder and the cover film but there is more than Van der Waals forces and DeVries knows of no one who has been able to explicitly separate Van der Waals forces from mechanical interlocking forces (DeVries Tr. at 541).

290. According to DeVries, the inventor of the '159 patent is concerned with a mechanical reaction between the binder and the cover sheet (DeVries Tr. at 542).

291. According to DeVries, respondents' sheeting and the sheeting described in the '159 patent are identical in all essential features based on the mechanical and physical tests DeVries conducted. They are both soluble after thermoforming but before curing; they are insoluble after curing; they both manifest an increase in bond strength as measured by the peel test associated with the curing; they both behave the same in the toluene drop experiment under the microscope that DeVries conducted; while Devries has not run the razor blade test on complainant's material he has seen it conducted at least through video and it behaves very much the same as DeVries personally observed in the case of respondents' material (DeVries Tr. at 655 to 657).

292. When dealing with laminates involving two layers of polymeric material physical bond strength is a consideration and physical bond strength is a system parameter (DeVries Tr. at 1017, 1018).

293. Physical bond strength is the force and energy that has to be expanded in order to separate one material from another material regardless of where the failure ultimately occurs. It is possible that the failure could occur in either of the two lamina and it is possible that the failure could occur at or near the interface or interphase. Cohesion is frequently used in

the field of laminates to refer to the internal strength within a lamina. Interface adhesion has been used to refer to the local strength of the physical bond where the two faces of the lamina are joined (DeVries Tr. at 1018, 1019).

294. In October 1974 DeVries stated that the concept of fracture in materials may be divided into two general classifications: one, the separation of a material from itself (cohesive fracture) and two the separation of a material from a dissimilar material at the bond line between the two materials (adhesive fracture). The "adhesive fracture" here was not necessarily referring to interface adhesion. DeVries is a proponent of the theory that adhesion is a system property not an interface or not a bond line per se. Maybe what should have been said, according to DeVries in 1974, rather than "bond line" is "in or near the bond line" (DeVries Tr. at 1020, 1021, 1025, 1026).

295. In 1974 it was recognized that a cured or cross-linked material may exhibit internal strength properties. It also can be stated that in 1974 it was recognized that a cured or cross-linked material may exhibit improved adhesion. Internal strength is a little bit more foreign to DeVries' vocabulary than cohesion. DeVries is not absolutely certain what is meant by the term "internal strength" when people use the term. He presumes that strength is pretty close to improved adhesion (DeVries Tr. at 1022, 1023).

296. DeVries understands claim 1 of the '159 patent to state that the present bonds do more than exhibit improved cohesion. DeVries does not understand from claim 1 that since bond strength is a measure of strength made up of cohesion and interface or interphase adhesion that the claimed clause "increased adhesion to ... cover sheet" is referring to improved interface or

interphase adhesion. DeVries thinks the claim could imply more than that (DeVries Tr. at 1023, 1024).

297. DeVries does not know exactly what interface adhesion means. He has an understanding of interphase adhesion. There are other ways in addition to interphase adhesion to obtain improved bond strength (DeVries Tr. at 1024, 1025).

298. DeVries equates bond strength with adhesion (DeVries Tr. at 1026).

299. According to DeVries the strength of an adhesive bond or the adhesion of an adhesive bond is not a function of only those things that are right there at the region of intertwining. Events somewhat removed from the intertwining can dramatically affect the strength of a bond. Such is related to the whole system and is a system property. It is a concept of fracture mechanics. A system property is more than just an interphase relationship (DeVries Tr. at 1026, 1027).

300. There is a quantity that DeVries calls the adhesive fracture energy and that is the energy that is required to separate two materials from each other along a bond line which is not necessarity a line. There is always a gross underestimate of the amount of energy that is required to separate two materials. Events somewhat removed from the bond line can contribute to it (DeVries Tr. at 1019, 1020).

301. As to the use of the term "increased adhesion" in claim 1 of the '159 patent, the inventor is talking about a test like the razor blade test in which the inventor is determining whether it adheres more tenaciously to the cover sheet as measured by a sort of qualitative measure. The term "increased bond strength" in claim 1 is referring to a quantitative aspect.

Thus "increased adhesion" can refer to increased qualitative bonding as measured by the razor blade test and "increased bond strength" can refer to quantitative bond strength (DeVries Tr. at 1030, 1031, 1032).

302. The term "improved adhesion" to DeVries means improved adhesion in or near the interface region (DeVries Tr. 1036 to 1042).

303. Wetting of the surfaces is a very important factor in assuring a decent bond and to get intimate contact between the two faces. A solvent can wet a surface and ensure intimate face to face contact between the two laminate. Solvent for wetting purposes was known in 1974 and earlier. Another means of wetting two surfaces to be laminated together is to heat them. Wetting or heating brings the molecules that are in the two faces into closer proximity to one another and that then gives dispersive forces of which Van der Waals forces is one of them. Dispersive forces, polar attraction and Van der Waals forces are all to be distinguished between so-called covalent or chemical binding. Covalent bonding is the kind of bonding that occurs between two atoms or molecules when they share electrons (DeVries Tr. at 1045, 1046. 1047).

304. The razor blade test in the '159 patent is a screening test to decide on likely candidates for the binder material in the reflective sheeting. DeVries refers to the wording of claim 1 of the '159 patent" "characterized in that the binder material is selected from materials that show increased adhesion to said . . . cover sheet . . . when a solid layer of the material that has been previously laminated to said sheet is cured" (DeVries Tr. at 1067).

305. The reference to "more than that" (Col. 2, line 45 of the '159 patent) refers according to DeVries to improved adhesion to the cover film which the inventor gets by curing (DeVries Tr. at 1082).

306. With respect to the '159 recitation "achieve greater resistance to a pulling apart of the cover film and base sheet material" (col. 2, lines 58-59) means to DeVries that after one has cured the material, it will be more difficult to remove the cover sheet from the base material. According to DeVries the inventor does not define here by what means he will measure the difficulty of physically removing the cover sheet (DeVries Tr. at 1083).

307. The phrase in claim 1 of the '159 patent "whereby the bonds have increased bond strength" refers to the narrow intersecting mechanical bonds (DeVries Tr. at 1085).

308. As for the '159 definition of curing, DeVries refers to col. 2, lines 17-21) wherein it is stated that curing describes the chemical reactions of constituent ingredients, such as cross-linking or chain-extension reactions, which result in relative insolubility and infusibility of the cured material (DeVries Tr. at 1088).

309. Cross-linking does take place in the 14 examples of the '159 patent during curing. Also in respondents' material cross-linking does take place during curing. With respect to respondents' actual sheeting and complainant's sheeting, immediately after thermoforming the materials are highly soluble. However after curing the base material is insoluble (DeVries Tr. at 1088, 1089, 1090).

310. DeVries can find no limitation in how the cross linking takes place in the definition of curing as found in the '159 patent (DeVries Tr. at 1090).

311. One cannot confine adhesive failure to just the interphase in which there is obtained a clean separation. DeVries prefers to define a failure as involving the bonding of two materials together (DeVries Tr. at 1129, 1130, 1131).

312. There are literally thousands of different choices of crosslinking systems one can make. The inventor is "sort of mute" on chemistry except in his examples. DeVries testified that "He really talks more about the physics of a situation, and gives you some tests by which you can select candidates; and then some final tests by which you can decide, hey, yes, you made the right choice or not - - based on those screening tests" (DeVries Tr. at 1132, 1133).

313. DeVries testified that it is possible that a material could meet the "increased adhesion" clause of claim 1 of the '159 patent but that the bond strength of the entire system has not improved. Reference is made to where one could find that something adhered very, very tightly but was extremely brittle and it might be difficult to remove with a razor blade but still in the peel test it might not have high strength (DeVries Tr. at 1138, 1139).

314. Louis Sharpe who has a Ph.D. was qualified as an expert in adhesion and adhesives and the chemistry of adhesion and adhesives (Tr. at 1749. RX-58).

(There are no FF 315, 316).

317. Sharpe testified that "cohesion" as used in the '159 patent refers to the internal bond strength within binder material (Sharpe RX-37 at 7, 10).

318. Sharpe testified that the second and only other occurrence of the word "adhesion" in the '159 patent (outside of the claims) is in the last paragraph under Example 1, in column 7, lines 3-22, at line 15; that in that paragraph, there is described a test involving a solid layer of binder material which is laminated to a cover sheet and cured by electron beam irradiation; that as described in that paragraph, the "adhesion" between the cover sheet and the solid layer of binder material was measured on two samples; that as the '159 patent describes it, in column 7, lines 13-22:

> "One of the samples was then irradiated with a 190-kilovolt electron beam ... after which the adhesion between each sample of the film and the polymethylmethacrylate was checked by attempting to separate them with a single edged razor blade. The uncured film could be easily removed, but the irradiated film was very tightly bound and could not be cleanly separated from the polymethylmethacrylate [cover] sheet." (Emphasis and words in brackets added by Sharpe).

that in stating, in the above-quoted passage, that the uncured cover film "could be easily removed" from the binder material, but that the cured film "was very tightly bound and could not be cleanly separated," Sharpe is informed that that failure prior to curing is interfacial, i.e., at the interface between the bonds and the cover film, but that the failure after curing is not at the interface; and it necessarily follows that the interface adhesion must have been increased by the curing (Sharpe RX-37 at 8, 9).

319. Sharpe's understanding is that McGrath in his '159 patent thought that he has a reaction between or penetration of the monomer materials into the cover sheet and that they were crosslinked. To that extent Sharpe testified that McGrath said something about the chemistry at the interface or across the interface. Sharpe believes that para. 27 of his direct testimony

(witness statement) which reads--

> 27. There can be no increase in interface adhesion in respondents' Ultralite Grade sheeting because, unlike the sheeting described in the McGrath patent, there can be no chemical bonding between molecules in the cover sheet and molecules in the bonding material because there are no functional groups on the polymer chains in the cover sheet of Ultralite which could react with the isocyanate cross-linking agent in the bond material.

--should better read in part "[t]here can be no increase in interface adhesion in a chemical sense in Respondent's Ultralite Grade sheeting" rather than "[t]here can be no increase in interface adhesion in respondents' Ultralite Grade sheeting." The phrase "interface adhesion in a chemical sense" refers to something beyond Van der Waals forces. Sharpe testified that Van der Waals forces are always operative (Sharpe Tr. at 1751; RX-37).

320. Sharpe testified that the phrase "visibly free of bond material, while it cannot be pulled away in that manner after curing" (col. 2, lines 49-51) means that the term adhesion points directly to the interface; and that "visibly free of bond material" can only mean "interfacial failure. Thus he concluded that the inventor is pointing directly between adhesion and the interface. Sharpe testified that the next paragraph of the '159 patent means that the inventor believes that monomer material migrates across the interface into the cover film and crosslinks there. Sharpe states that only monomer material migrates because in the inventor's examples monomers are the reactive materials (Sharpe Tr. at 1752, 1753).

321. Chemical bonding is something more than Van der Waals forces. Chemical bonding can be defined as covalent bonding (Sharpe Tr. at 1754).

322. The term "interface adhesion" means Van der Waals forces or hydrogen bonding or some of the other kinds of forces that are active between atoms and molecules (Sharpe Tr. at 1754).

323. Respondents' Sharpe testified:

Q Am I correct, Doctor, that you're defining adhesion in McGrath to mean interface adhesion?

A Yes I am. I am not defining it. I believe that he is defining it that way.

Q Then your definition of interface adhesion is Van der Waals forces or valence bonding?

A Or hydrogen bonding or some of the other kinds of forces that are active between atoms and molecules.

JUDGE LUCKERN: Am I correct, though, that you exclude covalent bonding?

THE WITNESS: Your Honor, adhesion, if I may explain, interface adhesion is essentially the getting together of molecules across an interface. In the most general sense, the getting together of those molecules at that interface and the forces that act across that interface are Van der Waals forces. However, in particular cases there may be something more than that. There may be chemical bonds if the chemistry is possible.

JUDGE LUCKERN: Covalent bonds?

THE WITNESS: Yes, covalent bonds. Or they may be hydrogen bonding in case that is possible and so forth and so forth. In other words all of the forces which act between atoms and molecules can participate in interface adhesion. That, however, is not to say that the strength of a system, that is the peel strength, has anything to do or is determined by or is derived from anything that happens at the interface per se.

JUDGE LUCKERN: I don't know who testified, but somebody testified and I don't mean, I will know once I go through this record I can assure everybody in this room, and I know you've been here and you've been very patient, but there was somebody that talked about the crosslinked molecules, something going through the surface where they meet and going above into the cover sheet, entanglement or something. I'm not trying to characterize it, and you may not have nay recollection, but somehow I remember them getting into the cover sheet some way. Do you recall anything like that? If you don't I understand why you don't because it's probably the way I'm trying to explain it right now. But I don't know whether it was Dr. DeVries or --

THE WITNESS: It was Dr. DeVries that characterized it in this way, and what he was doing was simply reflecting or expanding upon what Dr. McGrath said in his explanation that I just read at the last part.

JUDGE LUCKERN: You disagree with Dr. DeVries, is that correct? Of course this is a very broad statement when I say you disgree with Dr. DeVries, what am I referring to. So I guess that's not even a good question. But I was just trying to trying to find out if you recall what Dr. DeVries said there, whether you would go along with that or you'd take issue with that when you're talking about what we're talking about now.

THE WITNESS: What Dr. DeVries said was certainly a model and it certainly is theoretically possible. Whether it actually happens or not, we don't really know. That's really all I need to say on it.

* * *

BY MR. EDELL:

Q Are there other theories of interface adhesion other than just the Van der Waals forces or the valence bonding?

A Oh certainly.

Q But you are discounting those or ignoring those in your interpreation of what Dr. McGrath meant about adhesion?

A If you were asking me are there other theories, the answer is yes. There are other theories. What I am disagreeing, well I have not yet decided that I have disagreed with Dr. McGrath. What I have said is that Dr. McGrath has pointed very definitely to when he mentions adhesion, meaning interface adhesion, whatever that is, and he provides a theory, his theory of what that is. That's all I think I have said so far.

(Sharpe Tr. at 1754 to 1757).

324. Sharpe agrees that inventor McGrath in his '159 patent teaches that to solve the problem of the McKenzie '178 patent sheeting of the cover sheet separating away from the base sheet, one should select the binder material and the cover sheet to have a certain relationship with one another and that McGrath said that one can, with certain cover sheets, make a base

sheet from a material that can be cured; and that McGrath defines cure as the means of crosslinking or chain extension going from a relatively soluble and a relatively fusible state to a relatively insoluble and relatively infusible state (Sharpe Tr. at 1757, 1758).

325. Sharpe agrees that McGrath in his '159 patent taught that if the binder material is cured you will solve the problem of the cover sheet coming apart or separating from the base sheet and that one will get a higher quality and more useful product and that that is the important thing about the '159 patent. Sharpe also agrees that McGrath in the '159 patent, though he gives several examples and states what he is looking for, specifically states that he is not sure why he gets the better results than he gets (Sharpe Tr. at 1758, 1759).

326. Sharpe agrees that it is fair to say, reading the '159 patent as a whole, that what inventor McGrath is trying to accomplish in his '159 patent is to keep the cover sheet with the base sheet so that they do not come apart (Sharpe Tr. 1760, 1761).

327. Sharpe testified that as to the paragraph at col. 2, lines 42 to 51, McGrath is pointing directly to interface adhesion and implies that he can measure interface adhesion before and after "which he can't measure." Sharpe does agree that at the end of the paragraph at col. 2, which starts at line 52, what the inventor is trying to accomplish is a greater resistance to a pulling apart of the cover film and base sheet material (Sharpe Tr. at 1763, 1764).

328. Sharpe agrees that pulling apart the cover film from the base material will not measure interface adhesion (Sharpe Tr. at 1764).

329. Sharpe agrees that the heat shrink test as defined in the '159 patent will not measure "interface adhesion" as Sharpe defines it (Sharpe Tr. at 1764, 1765).

330. Sharpe agrees that the razor blade test described in the '159 patent does not measure interface adhesion "but McGrath apparently thought that it did" (Sharpe Tr.at 1765).

331. Sharpe agrees that the peel test in the '159 patent will not measure interface adhesion (Sharpe Tr. at 1765).

332. Sharpe agrees that the '159 patent states that the peel test is conducted on finished sheeting and that the '159 patent has a description of how to make finished sheeting (Sharpe Tr. at 1766).

333. At the time the '159 patent application was filed on February 17, 1976 there were a number of well known peel test specifications. There were the T-peel, the 180 degree peel, the 90 degree peel, the floating roller peel, the bell peel, the climbing drum peel etc. These were well known to people who did testing. Each such test specified certain test conditions and certain test apparatus which would be used in the conjunction with the test (Sharpe Tr. 1766, 1767).

334. Sharpe with reference to the following portion of the '159 patent (col. 7, lines 13 to 21):

> One of the samples was then irradiated with a 190-kilovolt electron beam to a dose of 1.5 megarads, after which the adhesion between each sample of the film and the polymethylmethacrylate was checked by attempting to separate them with a single-edged razor blade. The uncured film could be easily removed, but the irradiated film was very tightly bound and could not be cleanly separated from the polymethylmethacrylate sheet.

testified that the term "adhesion" coupled with "could not be cleanly separated" means to Sharpe that the sample before could be cleanly separated

which points to the belief, according to Sharpe, that the inventor was measuring something of interface adhesion, or thought he was (Sharpe Tr. at 1770, 1771).

335. In the razor blade test of the '159 patent, the inventor is comparing two samples - one that has been cured and another half of the same sample that is left uncured. In the first test the inventor tests the uncured sample and he separates the binder material from the cover sheet and finds that it comes away fairly easily and then the inventor tries the same procedure with the cured portion of the sample and he finds that he can no longer do this. When the inventor is conducting that test the inventor is determining whether he is getting the "more" that is read at col 2, line 45 of the '159 patent (Sharpe Tr. at 1771, 1772, 1773).

336. Sharpe is not saying that the inventor of the '159 patent is suggesting that the razor blade test should be run at some very low temperature. The inventor did not say what the temperature was (Sharpe Tr. at 1812).

337. Sharpe testified that McGrath talked in the '159 patent about the increase of something that McGrath could not measure (Sharpe Tr. at 1778).

338. Sharpe agrees that interface adhesion means Van der Waals forces or valence bonds and that given that interpretation Sharpe knows of no way to measure it (Sharpe Tr. at 1784, 1785).

339. Sharpe testified about the invention in the '159 patent:

> THE WITNESS: Oh yes, of course it would, Your Honor. It is an improvement over the prior art. There's no question about that. The McKenzie structure apparently failed due to the thermoplasticity of the binder, as best I can determine from what I have read and heard. This patent [the '159 patent] made what I consider to be an obvious

> transition from thermoplastic materials to thermosetting materials. Very definitely this is an improvement on the prior art. No question about it.
>
> * * *
>
> THE WITNESS: With the materials that McGrath has specified in his examples, and assuming that the temperature was at room temperature, there will be a perception with these materials that it is more difficult to remove the ['159 binder for example under Example 1] material [from a cast sheet with the razor blade test] before curing than after curing. That I will grant, yes.
>
> * * *
>
> THE WITNESS: I'm sorry. What I meant was that there is an improvement after curing relative to before curing. Yes.

(Sharpe Tr. at 1786, 1787).

340. Sharpe does not consider himself an expert in retroreflective sheeting (Sharpe Tr. at 1787).

341. Sharpe does not believe that one needs to understand or have definite proof of interface adhesion in order to use the teachings of the '159 patent to make the sheeting (Sharpe Tr. at 1789).

342. With Sharpe's definition of interface adhesion, neither the razor blade test, the shrink test or the peel test will measure it. If adhesion meant the amount of force it takes to separate the cover sheet from the base sheet, one could use, according to Sharpe, the peel test to get an indication. Also if the razor blade test were used to separate, for example, the two plies of a material or of a laminate, but according to Sharpe it is then not a razor blade test, then the razor blade test followed by the peel test could indicate the amount of force it takes to separate the cover sheet from the base sheet. The shrink test would not necessarily give one an indication of the increase in adhesion because the McKenzie thermoplastic '178

binder is subject to creep under the conditions of the test while the '159 thermoset binder will not. Thus according to Sharpe the shrink test has nothing to do with adhesion because the shrink test measured the ability of the binder material itself to withstand the shrinkage forces which are exerted by the shrinking oriented polymethyl methacrylate sheet and in the case of the '159 patent the binder is thermoset and therefore resistant to creep (Sharpe Tr. at 1790, 1791).

343. Referring to Example 2 of the '159 patent Sharpe agrees that the sheeting showed superior characteristic and results after the cure than before the cure but testified that "the sheeting is totally useless before cure. The sheeting before cure is not a product. The material before cure, the sheeting before the cure of the binder material is a product in the process of being made. It is totally useless as retroreflective material." Sharpe testified that the McKenzie '178 sheeting was not totally useless because it served for a few years according to the testimony that Sharpe has heard (Sharpe Tr. at 1793).

344. Sharpe agrees that it is correct to say that some adhesives are primarily thermosetting while others are primarily thermoplastic in nature. He also agrees that some adhesives are primarily thermoplastic in nature but have some thermosetting constituents or resins utilized to upgrade the characteristics of the adhesive. Sharpe is more or less familiar with those adhesives (Sharpe Tr. at 1793, 1794).

345. CX-194 is an article that Sharpe wrote in 1969. In the article he stated that adhesives are classified as thermoplastic or thermosetting (at 123) and that "Others are primarily thermoplastic in nature but have

thermosetting resins added to upgrade properties of the base material" (Sharpe Tr. at 1795, 1796; CX-194).

346. Sharpe has never conducted any tests on complainant's or respondents' sheeting, and has never conducted tests on any retroreflective sheeting (Sharpe Tr. at 1797, 1798).

347. When asked whether if someone gave Sharpe a sample of binder material and the other materials listed in Example 1 of the '159 patent and the '159 patent and whether Sharpe could then conduct a razor blade test, Sharpe testified that "I could conduct a razor blade test, but it might not necessarily be the test which McGrath specifies because McGrath really does not specify much of a test. He just says "attempt to separate, and I don't know what that really means." Sharpe testified that he would need to know exactly how to run the test i.e. should the razor blade be held parallel to the surface and there be a push under it, should one cut away from the edges and is the test complete when he does that or does he then pick up a released edge and try to peel it, what temperature should the test be conducted at, etc. (Sharpe Tr. at 1798).

348. When conducting a razor blade test Sharpe testified that it might make a difference whether one begans scraping the film from the edge of the polymethyl methacrylate or whether one inscribes a "v" in the film because occasionally there are edge effects which occur in, for example, coatings because of the fact that the coatings flow so as to make, in some instances, a thinner film at the edge and in fact in some cases a thicker film at the edge depending on whether the material goes all the way to the edge or stops somewhere short of the edge of the plate on which one puts the film. Thus Sharpe testified that the thickness of the film would likely be different on

the edge, either thicker or thinner, than it might be in the middle, so the test might actually be better run on a sample cut from the center of the film (Sharpe Tr. at 1799).

349. Sharpe stated that the following different variables that are involved in performing peel tests; the temperature at which the test is done, the manner in which the plies are pealed apart - whether at 90 degrees, at 180 degrees or in a T-peel, the rate at which the materials are pulled apart (Sharpe Tr. at 1800, 1801, 1802, 1804).

350. Sharpe has never seen the '159 razor blade test outside of the '159 patent (Sharpe Tr. at 1805).

351. Sharpe testified that the razor blade test as described in the '159 patent "doesn't measure adhesion in the interfacial sense, but that of course doesn't mean that was not the way it was sold to the patent office, as these materials possessing some sort of magic property which allowed them to pass that test" (Sharpe Tr. at 1806, 1807).

352. Sharpe testified that it is very difficult to say whether the '159 razor blade test does measure bond strength because Sharpe really believes that the way in which the razor blade test was intended to be used, i.e. just prying and cutting and not peeling, that what one is measuring is essentially the resistance of the film to cutting by a razor blade (Sharpe Tr. at 1807).

353. According to Sharpe, bond strength is the resistance to separation of a system of joined materials and cohesion relates to the bulk properties of single materials. Sharpe testified that when considering the bond strength of two lamina, the following factors are involved in terms of strength: the cohesive properties of the materials joined; the interfacial force which one actually is never able to measure but it is what holds the materials together at the interface originally (Sharpe Tr. at 1809).

354. Sharpe agrees that the normal interpretation as to running the razor blade test as described in the '159 patent would be at room temperature (Sharpe Tr. at 1814).

355. Sharpe testified:

> Q Then it says, "After which the adhesion between each sample of the film and the polymethylmethacrylate was checked" [Example 1 of '159 patent].
>
> Now it isn't saying that we're checking this at a high temperature or a low temperature. He doesn't specify any temperature condition. Is that what you're saying?
>
> A Yes.
>
> Q Wouldn't the normal assumption from this, Doctor, if your're going through following this procedure and you've taken it out of the press and you've irradiated with electron beam, wouldn't the normal interpretation be that you're at room temperature?
>
> A Of course. I said that 30 minutes ago in my testimony.
>
> Q I believe you also said, Doctor, that if operated at room temperature this test, you believe, has applicability, is that right?
>
> A Yes.

(Sharpe Tr. at 1813, 1814).

356. Sharpe gave his opinion that the razor blade test of the '159 patent was "not to measuring interface adhesion which is the way it was sold to the patent office" (Sharpe Tr. at 1814).

357. Whether one used a "v" or an "x" one would get about the same qualitative results from the razor blade test of the '159 patent (Sharpe Tr. at 1819).

358. Interface adhesion cannot be measured by the destructive testing of a joined assembly because according to Sharpe in general the failure does not occur there but occurs elsewhere (Sharpe Tr. at 1820, 1821).

359. Sharpe would take a razor blade to pry an edge or a section of it and try to peel the material to determine whether the material had, in Sharpe's terms, lower peel strength before curing and higher peel strength after curing. Sharpe does not think DeVries peeled his material. What Sharpe means is that one can cut away the material so that one can provide oneself with a tab which one can either grasp with one's fingers for a qualitative measurement or stick in a test machine if one wants a more quantitative test and measure the peel strength. Then Sharpe testified:

> And of course the problem with this is that if this patent had specified an increase in peel strength upon curing, that was something that was known. That such an effect would have been expected. And that is why McGrath put in that section in the patent, which allowed him to essentially provide this magic property, that he thought he had
>
> * * *
>
> THE WITNESS: But there are aspects, technical aspects of the file history which I think point to the fact that the examiner was convinced that they were in fact measuring increased interface adhesion.

(Sharpe Tr. at 1822 to 1824).

360. Sharpe testified that if upon his first in depth reading of the '159 patent he then conducted a razor blade test according to the '159 patent, he would pry the edges loose and try to peel (Sharpe Tr. at 1827).

361. Malcolm Smook who has a Ph.D. was qualified as respondents' expert in polymer chemistry (Tr. at 1167).

(There is no FF 362).

363. Laminates can be defined as two or more layers of polymer material (Smook Tr. at 1165).

364. Smook views the copolymer of ethyl acrylate and methyl methacrylate in Example 1 of the '159 patent as an inert or non-reactive polymer. The reactive bifunctional monomer polyethylene glycol diacrylate has sufficient stablizer (stearic acid) to prevent any spontaneous polymerization of the monomer during storage or subsequent use until that stabilizer is destroyed. The chemicals recited in said Example 1 are totally mixed or dissolved in one another to form a single phase solution of the material as it is applied in the subsequent step. In the subsequent step the binder is laid down as a film on top of glass beads which have been previously embedded in a polyethylene coated paper with the beads contained and positioned by virtue of their placement in the polyethylene coated paper. The next step in Example 1 is to dry the binder layer and to apply a reinforcing member on top of that binder layer which is a polyethylene terephthalate pressure sensitive adhesive so that the binder layer and the beads can be removed from the polyethylene carrier paper. In drying the binder the solvent is evolved or evaporated or removed and the residual film which is a tacky almost putty like type of material which has enough tack to remain in contact with the beads is left behind as the supporting member. In the next step of Example 1 a polymethyl methacrylate biaxially oriented 3 mil film is laid down on top of the bead face of the construction. Then this sandwich construction is put through what is called a thermoforming operation in which a grid pattern in the heated rolls forces a waffle like pattern into the binder layer, and attaches the binder layer through that waffle like grid to the cover sheet. In the next step of said Example 1 the resulting composite structure is treaded by an electron beam generating device to cross-link the bifunctional monomer which is in the composite construction (Smook Tr. at 1170-1173).

365. In Example 1 of the '159 patent the electron beam generates spontaneously a large concentration of free radicals. These free radicals then react with the bifunctional monomer which is present in the composite system. The free radical sets off a chain polymerization reaction polymerizing the bifunctional monomer to a high molecular weight and simultaneously cross-linking the polymer that is formed. In Example 1 two reactions are going at once. There is a chain growth or a chain extension reaction and a cross-linking reaction. This takes place very, very rapidly, almost instanteously. The reactions all involve a double bond of the acrylate. If there were only a single bond on the monomeric acrylate one would only get chain growth but the fact that there are two double bonds in the molecule gives one an opportunity to cross-link as well as chain extend. The monomer is acrylate is bifunctional because of the two double bonds in the monomer (Smook Tr. at 1173-1174).

366. Smook believes that it is theoretically possible that the inert polymer in Example 1 could also be affected to some degree by the electron beam irradiation but that in the system of Example 1 of the '159 patent it is unlikely that is of much consequence because the diacryl monomer is so reactive to the electron beam irradiation that it in effect scavenges most of the free radicals. If a higher electron beam concentration was used then it becomes less discriminatory and would initially attack first the inert binder resin and secondly the polymethyl methacrylate cover sheet. In Example 1 of the '159 patent one is talking about very short exposures to the electron beam. To activate a totally saturated polymer chain, one would talk about minutes or several minutes of exposure. Thus it is on the order of magnitude

perhaps 10 to 100 more irradiation than is experienced in Example 1 (Smook Tr. at 1174-1175).

367. According to Smook, the binder layer in Example 1 of the '159 patent is typically a pseudo interpenetrating network because only one of the species is involved in the cross-linking reaction. Smook pictures it as two entirely separate polymer systems - one system is simply providing a continuum in the reaction itself, while the reacting monomer polymerizes around and through the inert polymer and that is why Smook calls it an interpenetrating network. The reason Smook calls it a pseudo interpenetrating network is the fact that the other phase, the inert polymer, does not cross-link itself or take part in the reaction at all. Smook testified that there are systems which are true interpenetrating networks where each of the polymer chains cross-links and there is established a double interpenetration or interpenetrating phase (Smook Tr. at 1176).

368. Most of Examples 2,3,5 to 10 and 12 to 14 of the '159 patent have the same monomers and very similar inert polymers with the same electron beam initiation of the polymerization and the same free radical induced polymerization of those reactive monomers as in Example 1. There are one or two cases where different reactive monomers are exemplified in place of the diacryl monomer. However those cases perform in exactly the same way. They are bifunctional with the exception of Example 9. Example 9 of the '159 patent involves a single unsaturated carbon-carbon double bond. It is different than the other examples in that it has a very strong polar group (cyano group of cyanoethyl acrylate) associated with it which by attractive forces can perform in a similar way to a carbon-carbon double bond - not as

strongly, but in a similar fashion. Otherwise all the example are the same involving so-called pseudo interpenetrating networks (Smook Tr. at 1176-1177).

369. Example 4 of the '159 patent is similar to the other examples of the patent except for the method of polymerization of the unsaturated reactive monomer. In Example 4 instead of utilizing electron beam irradiation, the example uses ultraviolet light along with an unstable compound (benzoin ethyl ether) which is decomposed by the ultraviolet 1 light to generate free radicals. Those free radicals proceed in an identical fashion to the free radicals generated through the electron beam in the other examples (Smook Tr. at 1178).

370. Example 11 of the '159 patent also pursues identical chemistry as the other examples with the exception that the source of the free radicals are from an azobis compound which decomposes under the influence of heat rather than light and as it decomposes it generates again free radicals which initiate the free radical polymerization of the monomers (Smook Tr. at 1180).

371. All of the examples in the '159 patent involve an inert or unreactive polymer with reactive monomers with an inhibitor present and then after thermoforming, some means for triggering the reaction that initiates a free radical addition polymerization and cross-linking. According to Smook there is absolutely no teaching in the '159 patent with respect to the kind of chemistry concerning respondents' Ultralite viz. the effects on the ultimate mechanical bond strength of the ingredients, evaporation of the solvent, manner of mixing, manner of drying and the manner of curing (Smook Tr. at 1233).

372. The nature or consistency of the binder material in the examples of the '159 patent varies from example to example but in all cases there is a substantial concentration of the unreacted monomer. All of the unreacted monomers are low viscosity fluids which are compatible with the higher molecular weight inert polymer. The effect of the fluid monomer is exactly the same as that of a solvent. Thus depending on how much of the unreacted monomer is present, it has the effect of reducing the viscosity and the strength, cohesive character of the inert polymer. In some cases there is enough monomer to make the putty-like or tacky materials highly viscous fluids (Smook Tr. at 1180).

373. Chemical bonding and covalent bonding are identical. Chemical bondings in the '159 invention disclosure means the formation of carbon-carbon bonds across an interface. There is a fairly weak possibility that there is a chemical bonding between the binder material and the cover film in the areas in which they are sealed in the '159 patent. Whether it actually occurs or not is something else. According to Smook the chemical bonding that could occur would involve the migration of the reactive monomer into the cover sheet and then at the time of crosslinking be incorporated in the crosslinking operation. It would only be the reactive monomer that had entangled with the cover sheet during the period of thermoforming. Migrating across the interface and developing the same sort of entanglement would occur. The cover sheet is also an inert polymer. There would be no chemical bond formed between the cover sheet and the binder. The mechanism that Smook perceives occuring is that the polymerizing monomer encapsulates the inert chains and makes them part of a pseud-intepenetrating network. It is possible that the reactive monomer could migrate across the interface into the polymethyl

methacrylate sheeting and encapsulate some of the polymethyl methacrylate chains and by the same mechanism as the reinforcement takes place in the binder layer it could also take place across the interface and become enmeshed in the polymethyl methacrylate cover sheet. However the only polymerization sites would be in the reactive monomer. While there could be chemical bonding between the molecules of the cover sheet and molecules of the binder material when subjected to electron beam doses, Smook feels that the likelihood is not large because the electron beam strength is such that most of that radiation should be absorbed by the polymerizing monomer and not be extraneous reactions with either the binder material or the cover sheet (Smook Tr. at 1181, 1182, 1183, 1184).

374. Bond strength as used by Smook is simply the force to separate a laminate. The two components involved with bond strength are the cohesive strength of the material involved in the bond and the adhesion or mechanical bonding of the binder material to the cover sheet (Smook Tr. at 1216).

(There is no FF 375).

376. Solvent in respondents' process is said to be required to enable one to develop the close contact of the two substrates. However it is necessary to carefully remove the solvent in such a way that the interface between the two substrates is not disrupted. Removal of the solvent could be a problem in some systems because the polymer may be impermeable to the solvent vapors and therefore bubbles can be formed at the interface which will disrupt the adhesive bond (Smook Tr. at 1218).

377. Wetting is a term used in the adhesive industry to indicate that the surfaces of both materials or the surface of the substrate on which the binder is to be laid must be brought in close proximity, viz. molecular

contact between the surface of the cover sheet and the molecules of the binder. Smook agrees with complainant's expert DeVries that the surface between the binder layer and the cover sheet is an irregular surface. Hence Smook testified that unless there is a lot of mobility in the binder, the binder will not penetrate down into the crevices of that irregular surface and provide molecular to molecular contact which is said to be necessary to derive the benefit of thy Van der Waals forces which according to Smook are the prime source cause of interface or interphase adhesion. There is contact at a dissimilar surface and it must be molecular or the forces are not brought into play. According to Smook Van der Waals forces only function when the molecules are touching. Smook takes issue with DeVries statement that Van der Waals forces do not play a major role in the formation of adhesive bonds. Smook defines Van der Waals forces as a broad classification of polar attraction, hydrogen bonding and dispersion forces which are said to be practically the only factor involved in forming a good adhesive bond. Smook won't argue that it isn't possible for material to migrate across the interface and react covalently to form some bonds but Smook's contention is that that is a secondary effect and that the primary effect is the Van der Waals forces functioning at the interface. Smook thinks that DeVries made a very good analogy between interface and interphase and does not disagree with DeVries' statement that it is difficult, if not impossible, to provide a face against which any adhesive bond can be formed. Smook testified that there is an undulating irregular surface at the interface of the binder and cover film which destroys the idea of its being a mirror finish and hence testified that it is not a "face" but rather it is a "phase." As DeVries testified Smook agreed that there are peaks and valleys at the line of demarcation rather than

a "face". However whether the molecules are against a flat plane or whether they are undulating with the peaks and valleys at the interphase, Smook contends, based on Smook's experience in the adhesive field (although Smook does not "pretend to be an adhesive expert" as is Dr. DeVries) that the major forces responsible for the bond across the phase or interphase are Van der Walls forces (Smook Tr. at 1219, 1220, 1221, 1222).

378. According to Smook the seal or the initial contact that is made by any adhesive layer on a surface is dependent on obtaining good wetting and so the presence of solvent or fluid monomer that functions as a solvent or heat alone that reduces the viscosity of the binder layer to the point where it can be forced on a molecular basis against the surface to which it is being bonded can establish intermolecular contact between two surfaces (Smook Tr. at 1225).

379. Smook testified that paint is a good example to describe in a practical sense what is in issue. While there has been no chemical reaction across the interface with paint, the durability of the paint depends largely on the cohesive strength of the paint film. If it is not a strong film or is brittle such as in high humidity conditions, the paint blisters and falls off (Smook Tr. at 1226).

380. The statement in the file wrapper of the '159 patent (RX-5, paragraph D, page 5) that "[i]n fact, as noted above, in many cases, the adhesion of preformed bonds and a cover sheet is reduced by curing of the bonds" may be true although it is impossible to predict whether there will be an increase or a decrease in mechanical bond strength when the bonds are cured. One will have to try it (Smook Tr. at 1232).

381. Referring to the sentence in the '159 patent at col. 4, lines 65-67 viz. "Other useful binder materials are represented by diallyl glcol carbonate; and saturated or unsaturated polyester or polyurethane resins" Smook does not think it indicates the chemistry whereby the polyurethane is formed nor does it give any indication of the need for precursors which are different than polyurethanes. The examples in the '159 patent do not make use of the kind of polyurethane chemistry that is involved with respondents' Ultralite. There is no mention whatsoever of condensation chemistry in the '159 patent. Smook testified referring to the entire paragraph in the '159 patent, where the quoted sentence occurs, that the patentee refers to pairs of ingredients separated by semicolons and he lists the reactive monomers and the polymers that accompany them and then he recites the quoted sentence and he talks about other useful binder materials. The diallyl glycol carbonate is a reactive monomer in exactly the same sense as the diacrylates the the "saturated or unsaturated polyester or polyurethane resins" would correspond to an inert polymer. Hence the quoted sentence according to Smook does not deviate from the chemistry and the kind of examples that are typified in the 14 examples of the '159 patent. To further illustrate the point, Smook makes reference to Example 5 of the '159 patent where diallyl glycol carbonate is used as the reactive monomer and a linear saturated polyester is used as the inert polymer. The crosslinked polyurethane in the "Ultralite" is an end product which is obtained during the cure and formation of the binder resin, the precursors of which takes part in the condensation polymerization of the binder. According to Smook the recited "polyurethane" in the quoted sentence is an inert polymer (Smook Tr. at 1236, 1237, 1238).

382. The testing of mechanical bonds of laminates is a very broad subject. In any adhesive laminate, the testing involves the way in which the forces are applied to rupture the mechanical bonds. There has been a lot of attention in developing a whole variety of tests (Smook Tr. at 1241).

383. With respect to testing an uncured sample and a cured sample, Smook agrees with DeVries that it is the differences that count and variables can be eliminated. However when there is testing of the mechanical bond as to an authentic sample, the preparation of the original binder material has to be as respondents prepared it (Smook Tr. at 1244, 1245).

384. In the 1960's and early 1970's, prior to 1975, at DuPont from which Smook is retired, there were a number of laminated products developed and worked on in the research laboratory including such things as roofing materials in which films were laminated to provide weather endurability and moisture exclusion and good adhesion to roof substrates. All of the materials worked on in the lab were of a polymeric nature. If there was a problem in the 1972 to 1974 period in conjunction with the delamination of polymeric laminates, the individual assigned to the problem would have been a knowledgeable polymer scientist, either a trained chemist or engineer who would have had several years of practical experience in the evaluation of delamination type problems and who had some appreciation for adhesive alternatives and the formulation of adhesives which would have been the root of the delamination problem. At DuPont however no one was ever assigned a problem in a vacuum. An assignment would have been on a team basis. At DuPont the bulk of its scientists were Ph trained and so undoubtedly for a problem of the nature described, it would have been assigned to a PhD a scientist or an individual who would have had long experience and had "in

effect earned ... [the PhD] on the firing line" and hopefully someone who had had the maximum amount of experience in the area. Du Pont has a different research structure than other chemical companies in favoring hiring of Ph.D. chemists. Smook would expect to have a cadre of individuals who had some experience in the adhesive delamination formulation area and he would turn to one of these people for the assignment (Smook Tr. at 1163, 1288, 1289, 1290, 1291, 1292).

385. As to McKenzie's reference to "thermosetting constituents" at col. 6, lines 21 to 25, Smook testified that thermosetting constituents are materials that chain extend and crosslink alone if they have a reactive site on another polymer and that in order to use effectively a thermosetting material, the material must go through a thermoplastic phase so that it can be formed into the final configuration of which it is to be used (Smook Tr. at 1303, 1304).

386. An infinite number of crosslinkable polymeric systems is capable of existing today. Every one however will not result in improved adhesion or improved mechanical bond strength after curing (Smook Tr. at 1325, 1326).

387. The term "adhesion" has multiple implications. It is used loosely by the lay public and the scientific community. Adhesion per se according to Smook is not being measured. Mechanical bond strength is being measured (Smook Tr. at 1325).

388. Smook states that in claim 1 of the '159 patent the inventor McGrath is predicting that if a sheeting has increased adhesion then it will have increased bond strength and Smook testified that McGrath gives no data to the contrary (Smook Tr. at 1326, 1327).

389. Referring to the '159 patent, Smook testified that "adhesion can mean nothing but this interface adhesion that we talked about earlier". Smook also testified that while generally "adhesion is a broad term, but in this context, in the way the McGrath patent is worded, it can't be anything but the interphase adhesion that we've been talking about all week." Increased bond strength was said to be a simple concept in that one measures the bond strength but one does not measure the adhesion. When one talks about "interphase or interface adhesion", Smook testified that it is an unmeasureable concept. Components of bond strength were said to be cohesion or strength of the adhesive layer combined with the interface or interphase adhesion. While the more cohesive strength this inner layer has the stronger the material is, Smook testified that that does not translate directly to the mechanical bond strength and that the other factor which cannot be measured is interface adhesion. Smook testified that in reading the entire '159 patent (referring in particular to col. 2 at lines 42 to 51) and also some of the file history of the '159 patent it is stated that by increased adhesion something more is meant than increased cohesive strength of the binder and that leaves only the interface adhesion or interphase adhesion as the only logical additional component of the mechanical bond strength (Smook Tr. at 1387, 1388, 1389, 1397, 1398).

390. A study was made at DuPont in the early 1970's to consider the possibility to make a retroreflective sheeting but the study was never put into practice (Smook Tr. at 1330).

391. Beyond the results of a minor paper study, Smook up until the time he became involved with this investigation has never had any actual experience with retroreflective sheeting (Smook Tr. at 1334, 1335).

392. Smook does not consider himself an expert in adhesives (Smook Tr. at 1335).

393. Smook has never run any tests on retroreflective sheeting (Smook Tr. at 1335).

394. Smook does not consider himself an expert in retroreflective sheeting (Smook Tr. at 1336).

395. Smook has never made any investigation as to the skill of the people that are working in the area of the retroreflective sheeting (Smook Tr. at 1336)

396. Smook has never made any investigation with respect to the problems that people who are working in the area of retroreflective sheeting face in the construction of retroreflective sheeting (Smook Tr. at 1336).

397. Smook's testimony concerning this investigation is based on an intellectual study (in the sense that he has reviewed data as he has been reviewing data for 30-odd years in the technical field) of the situation rather than any physical examination or testing of actual products involved (Smook Tr. at 1336).

398. Smook has been working in the lamination and adhesive properties of polymers of all sorts almost his entire professional career. The emphasis on the work has been in polymers rather than in the intimate detail of adhesion and a theory of adhesion but the actual practical lamination of materials has been an intimate part of the work he has done over the years. Smook has worked on all kinds of rubber products in which multi-layer belts, multi-layer hoses, and pond liners which are laminated structures to contain water (Smook Tr. at 1337).

399. Smook testified that in 1974 if somebody had brought to him a problem with delamination of a polymeric laminate with respect to who Smook would assign the of studying the problem and trying to resolve it, Smook would have to consider the nature of the problem itself. He testified that there are a number of delamination problems which could be assigned to a fairly inexperienced individual who had practical experience. However if it was a fundamental long-range program that DuPont was undertaking to solve a problem of this sort, it would be assigned to a Ph.D chemist (Smook Tr. at 1344).

400. Smook testified that if the problem involved delamination of a McKenzie-type encapsulated lens sheeting, viz. a sheeting with polymeric cover sheet and a polymeric base sheet and binder material, he would assign the problem to a Ph.D. chemist with sufficient experience, hopefully, 3-5 years of experience in the adhesive field to tackle the problem from a fundamental point of view. The chemist would not to have to have experience in the retroreflective sheeting area because this is a fundmental problem in polymer chemistry and it makes no difference if it is a retroreflective sheeting application or a packaging application or any other type of lamination problem between to polymeric species. In about 1974 the literature was absolutely full of examples of crosslinked polymer systems to be utilized in the laminating of two polymeric materials together. Smook testified that anyone tackling the problem then had to be aware of the state of the art because there had been 20 or 25 years of development of systems of this sort prior to 1974 (Smook Tr. at 1345, 1346).

401. Creep is the propensity of a polymeric material or any solid material to flow under load over a period of time. Glaciers will creep. Any polymeric material with a load applied to it will creep, sometimes very

slowly, sometimes fairly rapidly. Crosslinking, according to Smook, will tend to reduce the rate of creep in any system (Smook Tr. at 1383, 1384).

402. Insoluble and infusible condition means a material is a tight gel which is no longer soluble or fusible (Smook Tr. at 1414).

403. Infusible means that a material will not melt (Smook Tr. at 1414).

404. The language in the '159 patent "It is recognized that a cured or crosslinked material may exhibit improved internal strength properties" (col. 2, lines 43-45) relates to cohesion (Smook Tr. at 1430).

405. Col. 2, lines 45-60 of the '159 patent, according to Smook, talks about interface or interphase adhesion. When asked whether it is possible that one gets here a physical migration into the cover sheet and that is what the inventor is talking or theorizing about, Smook testified "How are you going to differentiate that from interphase adhesion?" (Smook Tr. at 1430, 1431).

406. Smook testified that the "adhesive forces at the interface are well established as being Van der Waals molecular forces. Those forces are at that interphase or interface, something more beyond the Van der Waals forces contributes to that interphase adhesion such as covalent bonds or mechanical interlocking. It's contributing to the interphase adhesion. I don't think anyone is arguing with the mechanism for that interphase adhesion being obtained. Dr. McGrath's mechanism is as good as any. But it's still interphase adhesion no matter what you want to call it because that's where the adhesion forces are, at that interphase." Smook uses the terms "interface" and "interphase" interchangeably (Smook Tr. at 1431, 1432).

407. Smook agrees that at col. 2, lines 59-60 of the '159 patent the inventor states that the purpose of the invention of the '159 patent is "to achieve greater resistance to a pulling apart of the cover film and base sheet material" (Smook Tr. at 1432).

408. Smook's testimony that the binder layer in complainant's sheeting was "tacky and like putty" is based on his analysis of the '159 patent and not from examining commercial structures (Smook Tr. at 1550).

409. Smook reads the "adhesion" in the '159 patent as limited solely to interface adhesion and testifies that the Van der Waals forces between the two surfaces is the primary binding force in interface or interphase adhesion (Smook Tr. at 1550, 1551).

410. Smook read col. 2, lines 43ff of the '159 patent to mean that the internal forces were cohesion and since the '159 patent said "it did more than that you read it to be interface adhesion" (Smook Tr. at 1552).

411. Smook has heard of the diffusion theory but only as it would affect the adhesion at the interface (Smook Tr. at 1552).

412. Smook has heard of the mechanical adhesion or hooking theory which is that one gets a mechanical locking at the uneven surface of the interface which is enhanced by the cohesive strength of the binder material (Smook Tr. at 1552).

413. Smook has heard of testing for mechanical deformation but he is not familiar with the mechanical deformation theory of adhesion (Smook Tr. at 1552, 1553).

414. Smook agrees that the strength of adhesive joints is determined by the properties of the materials making up the joint (Smook Tr. at 1553).

415. While Smook testified that some paints cure and some paints do not cure and that a reason that one has so much trouble cleaning paint brushes when the brushes lay around for awhile is because paints cure (Smook Tr. at 1564).

416. Smook agrees that the shrink test, a peel test and a razor blade test set forth in the '159 patent did not necessarily measure interface adhesion and that those tests could not measure Van der Waals forces. He also agrees that there are no tests that would measure Van der Waals forces (Smook Tr. at 1567).

417. Smook testified:

> Q So would you also agree with me that you are placing an interpretation on the term adhesion that will not be satisfied by any of the three tests set forth by the inventor to determine whether using his invention, and which at this time at least in your knowledge there is no known way of measuring it?
>
> A The inventor has created through, I think the Judge called it his own lexography, his own terms and own definitions. He does define to his own satisfaction adhesion and measures it as such. I'm only saying that what he measures and calls adhesion has to be something else than interface adhesion because interface adhesion can't really be measured. The bond destruction tests that he measures are composite or system failures of both cohesive and adhesive failure. His other tests, his shrinkage tests, are the same. It's a different, a different series of stresses, a different series of failures, but whenever those bonds fail, it's an expression of failure of both the adhesive failure and the cohesive failure.
>
> Q After all that, Doctor, is the answer to my question yes?
>
> * * *
>
> THE WITNESS: Yes.

(Smook Tr. at 1568, 1569).

418. Adhesion is commonly used to mean bond strength (Smook Tr. at 1576).

419. Smook has run no study or investigation to determine how the term "adhesion" is used in the retroreflective sheeting industry (Smook 1576)

420. Respondents define adhesion as mechanical bond strength, i.e. the amount of force necessary to separate two layers. Smook testified that it is a misnomer to talk about adhesion when one is talking about bond strength of adhesive bonds because there are so many different ways of measuring bind strength. Bond strength can yield a number of different values depending on how it is tested. Hence Smook concludes that bond strength is a much more valid, scientific term than adhesion (Smook Tr. at 1576, 1577).

421. Smook testified that when the inventor in the '159 patent stated at col. 2 that "They do more than this" and when he states that it is going to achieve greater resistance to a pulling apart of the cover film and base sheet material, the inventor is referring to bond strength although the inventor also talks about a cohesive strength of his binder material. However Smook testified that the inventor is giving an additional explanation of what bonds do more than that; that the inventor is not theorizing about interface adhesion; that the inventor is stating that the additional contribution that he gets in the bonds is something over and beyond cohesive strength; and that the inventor is measuring bond strength (Smook Tr. at 1577, 1578).

422. Smook has never ran a razor blade test on respondents' accused sheeting. The only razor blade test Smook ever ran was on paint films where Smook used an X cut which gave in effect four V's and resulted in a greater opportunity for peel at the apex or the intersection of the two crosses.

Smook ran the tests years ago and the tests are a fairly standard test for paint exposed to a corrosive environment to see whether the paint will lift. The tests on paint have alot to do with bond strength but is not the sort of test that is described or alluded to in the '159 patent. The paint industry uses said a test very frequently for evaluating long term adhesion or bond strength to a substrate (Smook Tr. at 1585, 1586).

423. One can polymerize monomers in the frozen state (solid state polymerization) and the material that is polymerizing is certainly below its glass transition temperature (the point at which a flexible, rubbery material becomes glassy-like and no longer has the mobility. The material is frozen in effect although it does not imply any crystal structure) (Smook Tr. at 1587, 1588).

424. With respect to the statement in the file wrapper of the '159 patent "This test is recited in the amended claims to emphasize the distinctions exhibited by applicant's sheet material" Smook's understanding is that when the '159 application was originally filed and bond strength was used as the criteria for measuring the durability of the bond formed that it was insufficient in the Examiner's mind to accept that because it did not differentiate between cohesive bond strength and what the inventor was trying to convey and thus the razor blade test was developed which was accepted as an indication of a measurement of something beyond cohesive bond strength. The razor blade test is not recited in claim 1 of the '159 patent but the language "This test is recited in the amended claim" relates to the razor blade test in col. 7 of the '159 patent (Tr. at 1598, 1599, 1600).

425. When asked whether the razor blade test could be used to determine or find a binder that shows increased adhesion to the cover sheet when a solid material that has been previously laminated to the cover sheet is cured, Smook answered that it depends on how adhesion is used and that "[a]s far as I interpret that, the answer is no because it does not measure interface adhesion and interface adhesion is what was required to obtain the patent over and above the known increased bond strength contributed by cohesive strength of the cured adhesive." When asked whether Smook would agree that the razor test could be so used if adhesion were interpreted broadly so it would not be limited just to interface adhesion, Smook testified that he does not think the '159 patent would have been allowed because it would offer nothing over the conventional bond strength that was originally claimed in the '159 application (Smook Tr. at 1600, 1601).

(There is no FF 426).

427. The razor blade test that Smook is familiar with and relates to paints is a fairly common test for paint bond strength. The test emphasizes the potential for corrosion. Smook believe the test for paint is referred to in the literature although it is not the sort of test that would get into the ASTM literature but the test is used frequently for paint samples, particularly in corrosive environments. Smook has seen publications in which the paint test has been used. According to Smook the paint test is simply to initiate a clean surface for corrosion to take place to lift the coating. It is not a mechanical removal of the film by a razor blade in any sense. It is only to expose a clean interface. The manipulative steps in the '159 razor blade test and the paint test are different. The paint test involves

essentially a perpendicular scratch initiated in an X form with no scraping or manipulation of the film itself because that has to be avoided. A virgin surface is wanted for corrosion to take place (Smook Tr. at 1601, 1602).

428. Smook testified that there is always room for more data and that a scientist never gives up collecting data but that line has to be drawn some place (Smook Tr. at 1633).

429. Smook testified that initially the two tests that were enumerated by the inventor of the '159 patent were the shrinkage test and the the peel test and that the razor blade test was introduced after a rejection by the Patent Office; that the razor blade test was put in as a means of showing "enhanced adhesion". Smook testified that he and Sharpe feel that enhanced adhesion of the sort McGrath talked about can only be interface adhesion because increases in cohesion are already acknowledged by McGrath; that McGrath claimed that the razor blade test measured "this increased adhesion" and that "[t]here are some of us in the room who don't think that's true. But the fact of the matter is, the patent office was convinced that it was a meaningful task; and they issued the patent on the basis of it." Smook continued:

> You've seen how qualitative that razor blade test is - - no instructions for running it; no directions in the patent for how to do it.
>
> Dr. DeVries did his best to improvise a test after being instructed. But there's no way of quantifying how hard he worked at the razor blade, or what constitutes increased adhesion, or bond strength, if you prefer - - if I prefer.
>
> So no, to answer your question. I don't think the tests defined in McGrath are adequate to justify the claims they made that they've increased adhesion.

(Smook Tr. at 1635, 1636).

430. Smook, referring to RPX-30, testified that the bond strength in the accused sheeting is dependent upon a number of factors. He testified that the point of failure shifts between the two binder layers. Thus as binder layer two (orange layer on RPX-30) cures, the failure point on peeling shifts from interface A to interface B because binder layer two becomes tougher. According to Smook it is desirable to support the more regid binder layer one film on a cushion layer but binder layer two which is more highly crosslinked is for the long term durability of the product. According to Smook because with crosslinking one gets improvement of the higher temperature the accused construction is designed to do that (Smook Tr. at 1638, 1639).

431. The binder layer of the accused sheeting consists of a reactive polymer which is relatively high in molecular weight and which is the preponderant part of the composition. To this reactive polymer is added triisocayante which results in a crosslink network. The whole composition become a homogeneous single phased crosslinked network. Smook testified that in the 14 examples of the '159 patent there is an inert polymer in the presence of a bifunctional reactive monomer which monomer is inhibited from reacting until after the thermoforming operation and which results in the pseudo interpenetrating network. Smook testified that the chemistry of the binder material in the '159 patent is totally different from the chemistry of respondents' binder and that the only similarity is that both binders end up in crosslinked matrices of a different sort (Smook Tr. at 1640-1641).

432. Of the 14 examples in the '159 patent, Smook can only find one example (Example 11) which makes reference to a quantitative mechanical bond strength, viz. a tripling of the reported bond strength (Smook Tr. at 1641, 1642).

433. As to what gives rise to the increased bond strength in the '159 patent, Smook testified that it is a crosslinked structure that can be expected to increase the cohesive strength of the material according to the '159 patent (Smook Tr. at 1642, 1643).

(There is no FF 434).

435. Smook testified that neither the peel test nor the razor blade test of the '159 patent is a mechanical bond evaluating test (Smook Tr. at 1654, 1655).

VIII. Respondents' Tests

436. Miyata is the Section Chief of Seibu's Engineering Department. Kobayashi is the Chief Engineer and Miyata reports directly to Kobayashi and has for about 14 years. As Kobayashi's assistant Miyata has been primarily engaged or has been primarily in charge of new product development. His first assignment was the development of screen printing ink. His second assignment was the development of ULG ("Ultralite"), an encapsulated type reflective sheet. Throughout those assignments both have been working in the same room. Kobayashi has given instructions and orders to Miyata directly and Miyata has been reporting to Kobayashi directly. Kobayashi testified that "We have this free kind of relationship." (Kobayashi Tr. at 1455, 1456).

437. RX-49 is a report drawn up by Miyata. Miyata entered the data on RX-49. Kobayashi first received data up to the seventh day on RX-49 on January 20, 1988. On January 27 he received data that included up to the tenth day (included the last column on RX-49). Miyata arrived in the United

States on Feb. 5, 1988. As to the test which resulted in RX-49, Kobayashi had a briefing with Miyata prior to Kobayashi's departure from Japan i.e. on January 7, 1988. That was the last briefing. Kobayashi testified that "to verify that the tests were conducted exactly in the manner that I had instructed and in order for him to tell me the detailed contents of the test, I spoke with him on the telephone a number of times" staring on January 11 (Kobayashi Tr. at 1457, 1458).

438. The objective of conducting the test reported on RX-49 was to verify that the 180 degree peel strength would increase by a decrease in the residual solvent. Kobayashi testified that the last discussion he had with Miyata prior to Kobayashi's departure was to give instructions on ways and means for obtaining good adhesion; that binder one used for "Ultralite" is adhered onto the cover film as it flows into the cover film with heat; that the idea was that adhesion to the cover film would take place with the help of the residual solvent but that it was found out that those samples with "less amount" of residual solvent than what would be found on "Ultralite" showed that it would not adhere well to the cover film (Kobayashi Tr. at 1455, 1458, 1459).

439. Kobayashi testified that "we wanted to find out whether the peeling strength increases due to the increase in the cohesive force caused by curing or due to the increase in the cohesive force caused by the decrease in the residual solvent." When asked why he wanted that information, Kobayashi testified:

> Ever since this case was filed, I had discussed this matter with Mr. Miyata and we felt that since with binder one of ULG there is a considerable amount of residual solvent that

residual solvent works as plasticizer to decrease the cohesive force of binder one. And, thus, we felt that when the amount of residual solvent decreases, the cohesive force increases.

* * *

A. In order to verify that, we did the following: We prepared thermoplastic material which does not have the isocyanate and thermosetting material which includes the isocyanate and we began tests to reveal the correlationship between residual solvent and 180 degrees peel strength.

* * *

A Between the months of July through September 1987, we conducted preliminary tests to define the various test conditions. In October, we conducted the first planned test to find out the relationship between the residual solvent and 180 degrees peel strength.

In November, I discussed this matter with Dr. Sharpe and he made some suggestions. Up until December 1987, we conducted tests according to or based on the suggestions made by Dr. Sharpe. However, since with binder one of ULG ["Ultralite"], its adhesion to the acrylic film decreases extremely when the amount of solvent decreases, the tests did not succeed.

And by January 7th, 1988, we added two new conditions to prepare new tests samples. And the results of this tests is reflected in RX-49C.

(Kobayashi Tr. 1459 to 1463).

440. As to the preparation of samples disclosed in RX-49, a series of compositions were prepared containing the following respective percentage amounts of added solvent:

Thereupon each of the compositions was

coated onto what was called a release paper and dried. The dried films were then laminated with acrylic cover film. Next the release paper was peeled and the samples were again laminated with acrylic cover film. A vacuum applicator bag was used to improve the adhesion between the acrylic film and what respondents termed was "binder one" composition. Kobayashi testified:

> THE WITNESS: Binder one is coated onto what is called the release paper. Release paper is a kind of paper coated with silicone and polyethylene and silicon. Then this is dried by using a drying machine. When it is dried, we obtain a solid binder one film. And this is laminated with acrylic film through a heat roll.
>
> Next, we peel off the release paper and, again, laminate it with acrylic film. Therefore, the sample that has been prepared looks like a layer of binder one sandwiched between two acrylic films.

(Kobayashi Tr. at 1465; RX-49 to 56).

441. Kobayashi further testified:

(Kobayashi Tr. at 1470 to 1475)

442. RX-50 to 56 are plots based on the data appearing on RX-49. (Kobayashi Tr. at 1476).

443. As to RX-50 to 56, Kobayashi testified:

(Kobayashi Tr. at 1477 to 1486)

444. In respondents' tests, according to respondents' Smook, respondents are testing "simulated" samples of respondents' "Ultralite" preparation (Smook Tr. at 1573).

445. In the tests that respondents ran Smook was not able to state with precision what the residual solvent was in the samples. Smook testified "I think you [questioner Edell] prefaced your remarks by saying there were

always additional experiments to run. And indeed, if we wanted to publish these results, that's exactly what we would do. But under the circumstances, these are the data we have and the trends are irrefutable. That's really all we need to determine, I think, for this examination" (Smook Tr. at 1560, 1561).

447. Kobayashi was not in Japan to witness personally the tests which data is shown in RX-49 (Kobayashi Tr. at 1499, 1599).

448. Kobayashi testified:

(Kobayashi Tr. at 1832 to 1835, 1837, 1838).

449. Kobayashi also testified:

THE WITNESS: No.

(Kobayashi Tr. at 1839 to 1840).

450. Kobayashi further testified:

(Kobayashi Tr. at 1848 to 1850).

Pages 318-341
Confidential & Deleted

497. Thermoforming does not necessarily mean embossing but when it is embossed as in the '159 patent it is a thermoforming step. Hence the terms are synonymous in the '159 patent. The technique of embossing as practiced in the '159 patent is a thermoforming embossing. In respondents' process the whole composite structure is run through a heated roll or two heated rolls one of which has an embossing pattern on it (RPX-30) which pushes the binder up into the laminate and forces binder layer 1 up against the cover sheet. After embossing, "Aging II" takes place as referred to in RPX-30 whereby the final seal is strengthened (Smook Tr. at 1201, 1202, 1203).

498. Smook testified that respondents' material prior to the "Aging II" step is much less fluid than the material in the examples of the '159 patent prior to curing (Smook Tr. at 1210).

499. The '159 examples are all free radical initiated addition polymerization reactions proceeding very rapidly to completion. Respondents' "Ultralite" curing sequence is slower, persistent, non-triggered, through condensation chemistry to a" end product (Smook Tr. at 1211).

500. In respondents' "Ultralite" process the material in binder layer two because it has a higher ethyl acrylate content and has a higher concentration of isocyanate is much softer than the composition in binder layer one and also is more deformable because it has the higher concentration of unreached isocyanate. As the "Aging II" process progresses the isocyanate reacts with the reactive groups on the polymer chain in both binders but because there is so much more isocyanate in binder layer two, binder layer two becomes much more tightly crosslinked. Although it still has a lower modulus of elasticity it is more rubbery than binder layer one because of the ethyl acrylate in its backbone. However it is no longer deformable (Smook Tr. at 1213).

501. Smook testified, referring to RPX -30, that in respondents' process, the stress concentration in the peeling back of the cover sheet from the binder will change depending on the strength and modulus of the separate binder layers. Initially because binder layer two is softer and less well cured, the failure will occur at the interface between binder layer one and binder layer two (failure modes a and a' on RPX-30). However when binder layer two is fully cured and much tougher than in the early stages when the cover sheet is peeled from the binder, the failure mode switches to binder layer one (failure mode b on RPX-30) and factors across the interface between the cover sheet and the binder layer one are controlling (Smook Tr. at 1215, 1216).

502. As for why respondents use an isocyanate in preparation of

their "Ultralite" Smook testified:

> A The primary reason for addition isocyanate to a system of this sort or crosslinking a system of this sort in the first place is for stability at higher temperatures. The fact is that this binder material which we've already indicated initially as a thermoplastic polymer with a softening point which permits it to thermoform will, it it's uncured, will revert to the original form under stress and at high temperature, so that on outdoor exposure you could expect possible failure of the bond.
>
> It's well know that crosslinking stabilizes this system at higher temperature, any system at higher temperature, and restricts or limits the opportunity for the material to cold flow or creep and ultimately destroy itself.

(Smook Tr. at 1382).

503. In respondents' binder layer, the isocyanate reacts with the hydroxyl of the alcohol and nothing is given off. In the reaction of an isocyanate with a hydroxyl, the addition is across a double bond but it is not across a carbon-carbon double bond. The reaction of a hydroxyl group with an isocyanate results in a polyurethane or a urethane linkage. It is possible to make a urethane linage by reacting a chloroformate with an amine and when that is done hydrogen chloride is lost and there results he same chemical bond structure as when the hydroxyl reacts with the isocyanate. Smook testified that most chemists would consider reaction of isocyanate with a hydroxyl as a condensation rather than an addition. He testified that the kinectics or the way in which the reaction proceeds is commensurate with condensation polymerization (Smook Tr. at 1549, 1550).

504. Respondents' accused sheeting is a retroreflective sheeting which comprises a base sheet having a layer of retroreflective elements disposed over one of its surfaces and a cover sheet disposed in space relation from the layer of retroreflective elements. It also has a network of narrow

intersecting bonds extending between said cover sheet and base sheet and comprises binder material thermoformed at the point of contact between said bonds and at least one of said cover sheet and base sheet so as to adhere the two sheets together and form a plurality of cells within which retroreflective elements are hermetically seals (Smook Tr. at 1579, 1580).

505. Respondents' binder material in the accused sheeting starts curing immediately after it is formulated and cures continuously before and after the thermoforming operation and the majority of it, cures after thermoforming. Smook has run no tests to determine how much curing takes place in respondents' sheeting prior to cure. Smook testified that he knows that there is immediate curing to some extent because the kinetics of the chemistry require it. Smook testified that he has no way of knowing how far the cure has progressed and indeed until he saw DeVries' solubility samples, Smook did not know. Even now Smook testified one still does not know how far the cure has progressed because there can be considerable chain extension before insolubulization occurs, and it is masked to some extent by the titanium dioxide present. Smook still concedes that probably the bulk of the cure occurs after thermoforming despite the fact that some occurs beforehand (Smook Tr. at 1580, 1581, 1582).

506. As for respondents' binder, Smook testified:

> JUDGE LUCKERN: When you say considerable chain extension, would that mean, I'm not trying to put words in your mouth, but is that considerable crosslinking or considerable formation of linear polymers, straight line, or what? I just want to know what you meant when you said considerable chain extension.
>
> THE WITNESS: In the case of the Seibu binder material, Your Honer, straight chain growth cannot take place as it can in a free radical double bond polymerization. In this

case the chain extension is by way of branching where one chain is tied to another through a reaction with a hydroxyl group on adjacent chains to form one linkage and then the second chain can attach to a third chain and a fourth chain, in this way getting a very long chain through side chain branching, long chain branching.

Now when some of those chains that are long chain branched combine with themselves, you begin to set up a network that becomes insoluble. So there is a progressive sequence of chemistry that takes place in the curing and crosslinking. As a matter of fact there is a machine which the Monsanto Company sells called the "curometer" which does just what we're saying. It measures by the increase in force required to deform the material as it cures, the progression in this sequence. First chain extension, then branching, then coupling, then crosslinking, and then tight gel formation.

It's a continuum just like many things in this world are, and when you say a polymer begins to cure, it progresses along that course. Eventually it becomes insoluble. Eventually it becomes infusible. Eventually it can no longer be handled in any way at all, it's totally crosslinked. But it's not just uncrosslinked and crosslinked. That's the point.

JUDGE LUCKERN: Just one more. Would you say that you can have a crosslinked system and yet it would still be soluble?

THE WITNESS: Very lightly crosslinked, Your Honor, because if it becomes anything beyond that it begins to form a very very loose gel called, you can break that gel up because it's so fragil [sic], and simply a stirring rod in a solution will make that into microgel particles. But the fact of the matter is that once it gets to that stage it's crosslinked.

(Smook Tr. at 1582 to 1584).

507. Smook also testified:

Q Do you agree with me that after curing that the Seibu sheeting is relatively insoluble and infusible?

A Yes.

Q Did I understand you to testify yesterday, Doctor, that you believe that reaction cannot be taking place, any type

of reaction cannot be taking place between the base sheet of the Seibu ultralite sheeting and the cover sheet because the cover sheet in Seibu is not a reactive cover?

A In a sense that's the reason, although the difference between the hypothesis that Dr. McGrath set up and any hypothesis that you might try to establish with Seibulite material is that in the case of McGrath you have fairly mobile polymerizable monomer which could, and I say could, migrate into the cover sheet, and then crosslink or react with monomer that was left behind in the binder.

In the case of the Seibu material the only reactive species, either the hydroxyl containing polymer which is a high molecular weight polymer and cannot migrate into that cover sheet, at least it's pretty illogical that it would, and the isocyanate which if it migrates into the cover sheet will not react with the cover sheet. It can't do anything in the cover sheet, so there's no way that there can be bonds formed across that interface. That's what I tried to imply.

Q Except perhaps by mechanical bonding.

A Except mechanical bonding. That's correct.

(Smook Tr. at 1584 to 1585)

508. Smook agrees that in the accused sheeting there is a chemical reaction of constituent ingredients such as crosslinking or chain extension reactions which will result in the accused sheeting becoming relatively insolible and infusible. Also the accused sheeting cures by crosslinking.

509. Smook has never tested any of the accused sheeting. He also has never witnessed any tests made on the accused sheeting. Smook has done no testing on complainant's material. Smook did not testify that the increased adhesion in complainant's sheeting is caused by a loss of solvent (Smook Tr. at 1652, 1653).

510. In manufacture of "Ultralite", there is a cross-linking phenomenon that occurs between the acrylic resin and the isocyanate (Kobayashi CPX-60 at 17, 18).

511. Respondents' Kobayashi testified in deposition:

> Q BY MR. EDELL: In the ULTRALITE sheeting, Mr. Kobayashi, does it take more force to separate the cover sheet from the base sheet after cross-linking is completed than it does immediately after thermoforming?
>
> A Since I never conducted a peeling test for that, I cannot give you any concrete figure. But from my experience of using hand or knife to destroy, then it seems that it needed more force.
>
> * * *
>
> Q BY MR. EDELL: When curing is completed, does it take more force to separate the cover sheet from the base sheet than it does right after it's been thermoformed?
>
> MR. GARDNER: I just want to make sure I understand. You are just picking two points in time and saying at that time would it take more force then it would have just after thermoforming?
>
> MR. EDELL: Right.
>
> MR. GARDNER: Okay.
>
> A That is correct, apart from whether that force is big or small.
>
> MR. GARDNER: The degree of the force?
>
> THE WITNESS: I meant the degree of increase of force; for example, force is increased 10 percent or 20 percent or 50 percent.

(Kobayashi CPX-60 at 48, 49).

512. Referring to CPX-68, identified by complainant as "blowup chart of Seibulite "Ultralite" construction from Seibulite brochure", it shows a retroreflective sheeting which comprises from top to bottom a top film, air

capsules, glass beads with a metallized undercoating in a synthetic resin or base sheet, adhesive and plastic paper. In manufacturing the sheeting, the synthetic resin was thermoformed whereby thermoforming forces caused resin to go up through the glass beads shown by the pink indentations on CPX-68 (DeVries Tr. at 668, 669).

513. Referring to CPX-68 DeVries has observed the glass beads in the sheeting. A cover sheet is the top film on CPX-68 disposed in spaced relation from the layer of retroreflective metalized glass beads. There is a network of intersecting bonds on CPX-68 extending between the cover sheet and the base sheet. DeVries observed respondents' binder being thermoformed. The thermoforming is between the synthetic resin and the cover sheet. The glass beads are forced up but do not participate in the thermoforming. In the thermoforming the synthetic resin is forced up by pressure and temperature between the beads into contact with the cover sheet. Thus there is formed a plurality of cells within which retroreflective elements are hermetically sealed (DeVries Tr. at 668-674).

514. Respondents' "Ultralite" retroreflective sheeting is prepared in accordance with the process set forth in Miyata U.S. Patent No. 4,653, 854 (the '854 patent) and comprises a combination of two separate layer (CX-111 at 5, CX-13, Kobayashi Dep CPX-60 at 11; Smook Tr. at 1191, 1239, 1640).

515. The '854 patent issued March 31, 1987 on an application filed March 5, 1985, based upon a Japanese foreign priority application date of March 15, 1984. On its face it is assigned to one of respondents (CX-13).

516. The sheeting shown in the following FiGS. 4 and 5 of the '854 patent, according to Kobayashi is what is referred to in the industry as a retroreflective sheeting.

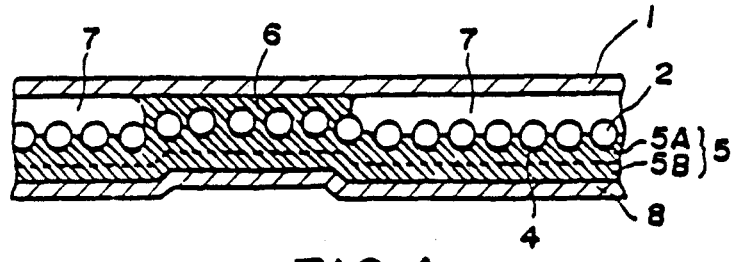

FIG. 4

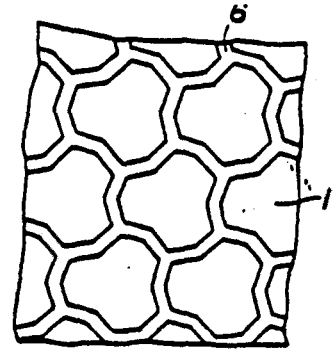

FIG. 5

(Kobayashi Dep. CPX-60 at 11)

517. Referring to FIG. 4 of the '854 patent, item 1 is a cover sheet which is mounted in a spaced relationship from the glass beads or the retroreflective elements (items 2 and 4). Item 6 is a network of narrow intersecting bonds that extend between the base sheet or binder material or upper layer of support film 5A (base sheet or binder material) and cover sheet. The upper layer is thermoformed into contact with the cover sheet to form the narrow intersecting bonds. The thermoforming causes said upper layer to adhere to the cover sheet to form a plurality of hermetically sealed cells (Kobayashi CPX-60 at 11, 12, 13, 14).

518. Claim 1 of the Miyata '854 patent reads:

> 1. Reflex-reflecting sheeting in which a monolayer of glass beads are supported by a support film made of a synthetic resin with their metallized lower hemispheres being substantially embedded in said support film and a large number of separate, hermetically sealed small cells are defined between a transparent protective film made of a synthetic resin and provided above exposed surfaces of said glass beads and said support film by a connecting wall of continuous lines formed by partial thermoforming of said support film characterized in that said support film comprises at least an upper layer which is in contact with said glass beads and a lower layer disposed on a side opposite the side of said upper layer in contact with said glass beads, said lower layer is of such a composition that said lower layer has larger cohesive force and rubbery elasticity than said upper layer and said protective film is a substantially unoriented film.

(CX-13, col. 15, lines 39-55, col. 16, lines 1-2).

519. The Miyata '854 patent referring to the McKenzie '178 patent and to the following FIGS. 2 and 3:

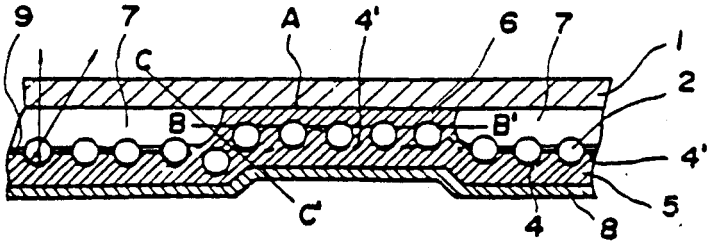

FIG. 2
PRIOR ART

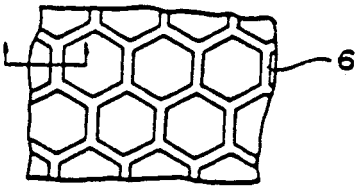

FIG. 3
PRIOR ART

describes the McKenzie sheeting as follows:

> A typical example of the capsule type reflex-reflecting sheeting is disclosed in Japanese Patent Publication No. 7870/1965 (the specification of U.S. Pat. No. 3,190,178).
>
> The structure of the reflex-reflecting sheeting and the method for producing the same disclosed in the above publication may be summarized with reference to FIG. 2 as

follows: First of all, upper hemispheres of glass beads are embedded provisionally in a support layer (not shown) and a metallized layer 4, 4' is vapor-coated over the lower hemispheres of the glass beads 2 and the surface of the support layer which is not occupied by the glass beads 2. Then support film 5 made of thermoplastic polymer is coated on the metallized layer 4, 4' and a heat-resistent film 8 is provided under the support film 5 to cover the lower surface thereof. The provisional support layer on the opposite side is stripped off and a biaxially-oriented transparent protective film 1 is laid over the upper hemispheres of the exposed glass beads 2. The laminate is heated and pressed from the side of the heat-resistant film 8 by a platen having a network pattern of raised ridges represented by FIG. 3 or of a lattice work for forming desired isolated small cells 7, 7. The support film 5 is partially melted to contact the transparent protective film 1 there by forming the connecting wall 6 after the pattern of the platen which defines the isoated small cells 7.

While the structure in which the network connection between the protective film 1 and the support film 5 by the connecting wall 6 is formed by utilizing the support film 5 itself without using a separate bonding material is convenient, the material and mechanical structure of the support film 5 must have not only sufficient strength and flexibility but also properties necessary for an adhesive, i.e., sufficient cohesive force within the material itself and sufficient adhesive force relative to the protective film 1.

Selection of a suitable material for realizing such type of reflex-reflecting sheeting in a practicable form requires many tests and studies in addition to general knowledge concerning adhesives. The above described prior art, for example, selected the combination of thermoplastic polymethylmethacrylate as the support film 5 and biaxially oriented polymethylmethacrylate film as the protective film 1.

(CX-13, col. 2, lines 17-62)

520. The Miyata '854 patent refers to what are said to be "drawbacks" of the McKenzie '178 structure as follows:

This prior art sheeting, however, has several drawbacks. One of them is that the connecting portions of the sheeting tends to be destroyed due to various external causes. The Japanese Preliminary Patent Publication No. 110592/1977

corresponding to U.S. Pat. No. 4,025,159 states in effect that the above described prior art reflex-reflecting sheeting which uses thermoplastic polymer is inadequate in its durability.

Although the Japenese Patent Publication No. 7870/1965 describes generally that hot-melt type thermosetting polymer may be used as the material for the support film, no specific example is given in the specification.

Secondly, the reflex-reflecting sheeting disclosed in Japanese Patent Publication No. 7870/1960 [sic] adopted such structure that, as shown in FIG. 2 of the Publication, the metallized layer 4, 4' covers the lower hemispheres of the glass beads 2 and the portion which is not occupied by the glass beads 2 in an uninterrupted layer. That is to say, the metal deposit constitutes an integral and continuous surface.

Since the area of the metallized layer 4' covering the portion which is not occupied by the glass beads 2 is considerably large in this structure, the reflecting sheeting appears dark.

For preventing light from reaching the upper surface of the metallized layer 4', a cover layer 9 of a bead-bond coating including a pigment such as a rutile type white pigment (TiO_2) as shown in FIG. 2 must be provided. A part of this coating is present between the surfaces of the lower hemispheres of the glass beads 2 and the metallized layer 4 and this intervening coating tends to prevent the incident light from reaching the metallized layer through the glass beads thereby giving rise to the tendency that the rate of light reflex-reflection of the sheeting is reduced.

(CX-13, col. 2, lines 63-68, col. 3, lines 1-30).

521. The Miyata patent, referring to its FIG. 2, comments on the Japanese counterpart of the '159 patent as follows:

Japanese Preliminary Patent Publication No. 110592/1977 is a prior art directed to eliminate the above described drawback of the reflex-reflecting sheeting disclosed in Japanese Patent Publication No. 7870/1965, i.e., the inadequate durability due to utilization of a part of the support film of thermoplastic polymer as the connecting wall to the protective film.

> Different from the general description in the Japanese Patent Publication No. 7870/1965, this publication teaches that the adhesion of the support film to the protective film can be remarkably improved by employing a specifically selected composition for the main material of the support film, i.e., a special composition prepared by mixing into a mixture of acrylic-based thermoplastic polymer similar to the one disclosed in Japanese Patent Publication No. 7870/1965 ingredients such as monomer polyethylene glycol diacrylate, 2-cyanoethyl acrylate and 1,6-hexanediol diacrylate which are polymerized and cured by irradiation of ultraviolet ray, electron beam or heat ray.

(CX-13, col. 3, lines 31-50).

522. The Miyata '854 patent states that "there is no structural difference between the Preliminary Patent Publications No. 110592/1977 and the first described prior art [7870/1965] except that the binder, i.e., the support film 5 of a thermoplastic polymer in the prior art is merely replaced by one of a hot-melt type setting polymer" (CX-13, col. 4, lines 17-42).

523. Under the subheading "Summary of The Invention", the '854 patent discloses:

> The construction of the reflex-reflecting sheeting according to the present invention is as described in the appended Claim 1, but some explanations will be added hereinfor more complete understanding.
>
> A means adopted in the present invention for solving the above-mentioned problems is that the support film is composed of an upper layer and a lower layer which have different compositions and physical properties from each other at least when the support film is adhered to the protective film such that the upper layer has larger adhesive force than that of the lower layer, whilst the lower layer has higher resistance to cohesive failure and rubbery elasticity than that of the upper layer, and the upper and lower layers are formed into the integral support film.

(CX-13, col. 5, lines 13-27).

524. The Miyata '854 patent, under the subheading "Detailed Description of the Invention" and referring to following FIG. 4

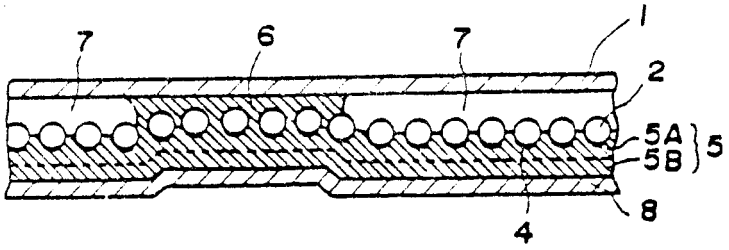

FIG. 4

describes an example of the construction of finished sheeting prior to attaching a release paper thereto for delivery as follows:

> A protective film 1 is partially connected with a support film 5 by means of a connecting wall 6 formed by thermoforming of the support film 5. The inside spaces surrounded by the wall 6 constitute hermetically sealed pockets or cells 7. The lower hemispheres of glass beads 2 are embedded in an upper layer 5A of the support film 5, whereas the surfaces of the upper hemispheres thereof are exposed from the surface of the upper layer 5A in the cells 7. The surfaces of the lower hemispheres of the beads 2 constitute a reflective surface covered with a metal vaporcoated film. This structure is the same as that of the conventional capsule type reflecting sheetings.
>
> Since the characteristic feature of the present invention resides in correlation between the upper layer 5A and the lower layer 5B of the support film 5 in ingredients or compositions and physical properties as well as the combined structure of the two layers of the support film 5, these points will be described more in detail hereinbelow.
>
> The support film in the present invention must possess favorable adhesion to the protective film, and such adhesion is not determined one-sidedly by the principal components of the support film but depends upon relationship of the support film with the composition of the protective film.
>
> One of the best combinations includes a combination of the protective film containing acrylic copolymer as the

> principal component and the support film containing acrylic-based polymer as the principal component.
>
> It is however, to be noted that the present invention is not limited to the above described combination, but any combination of the protective film made of a suitable polymer and the support film made of a crosslinked polymer may be utilized in the present invention. Hence a combination which, for example, the protective film comprises polycarbonate or polyvinyl chloride as the principal constituent and the support film comprises saturated polyester or linear plyurethane as the principal constituent can also be accepted.

(CX-13, col. 5, lines 67-68, col. 6, lines 1-38).

525. The Miyata '854 patent requires that the composition of the upper layer of the support film should have good adhesion to the protective film and, at the same time, possess favorable affinity for the lower layer so that the upper and lower layers can be integrated together (CX-13, col. 6, lines 65-68, col. 7, lines 1).

526. The Miyata '854 patent in commenting on the sheeting structures in the '159 patent and the '854 patent discloses:

> In making reflecting sheetings, details of the mechanism of curing of the support film in a preferred embodiment according to the present invention will be different from that disclosed in Japanese Preliminary Patent Publication No. 110592/1977. More specifically, since each molecule of the thermoplastic polymer disclosed in Preliminary Publication Patent No. 110592/1977 has no particular active group, principally monomers added therein are believed to polymerize one another to cure the whole composition.
>
> On the other hand, it is preferable in the present invention that one or more among several components to be copolymerized in a material used for the support film have active groups, chain molecules having a number of active groups are produced by the copolymerization of these components, and these chain molecules are cross-linked as a whole by polyisocyanate.

> Accordingly, it wil be acknowledged that the structure of the support film described in Preliminary Patent Publication No. 110592/1977 differs from that of the support film of the reflecting sheeting according to the present invention.

(CX-13, col. 9, lines 52 to 68, col. 10, lines 1 to 5).

527. Table 3 of the Miyata '854 patent refers to results of a heat shrinkage test and Table 4 to the results of a heat-water cycle test "in which the known thermoplastic support film and thermosetting support film supplied by Minnesota Minning and Manufacturing company were used" (CX-14, col. 14, lines 47-53). In the prosecution of the '854 Miyata patent, the Examiner rejected certain claims on the '159 patent in view of a Holmen U.S. Patent No. 3,832,227 (the '227 patent), an Eagon et al U.S. Patent No. 4,023,889 (the '889 patent) and other art (CX-14 at 51). The Holmen '227 patent discloses an exposed lens retroreflective sheeting which included a binder material that strongly adhered to the spherical lens elements (CX-185, col. 1, lines 14-16, 34-35). In distinguishing over the rejection of the '159 patent in view of Holmen it was argued:

> Applicant has further carefully reviewed Holmen et al. and respectfully submits it relates to a heat-bondable retroreflective sheeting which comprises a monolayer of spherical lens elements supported by a layer of binder material comprising thermoplastic heat-activated adhesive copolymer that compries ethylene, vinyl chloride and acrylamide, mirror-like specular reflective means provided at the back of the spherical lens elements and, if necessary, an adhesive layer 14 provided at the back of the binder material layer. Again, Applicant respectfully submits that this structure is entirely different from the basic construction of the capsule type reflex-reflecting sheeting in Applicant's invention and McGrath [the '159 patent]. In addition, the adhesive layer 14 is used for adhering to articles such as photographs and accordingly, Applicant respectfully submits Holmen et al does not teach the double layer structure for the support film of Applicant's invention. Futhermore, Applicant respectfully

> submits that even if Holmen et al does teach the missing elements to McGrath, the combiation thereof is not proper to solve the problems of McGrath due to differences in structure and the fact that these two references are not from analogous arts.

(CX-14, Amendment of June 11, 1986 at 7). The Eagon '889 patent discloses an enclosed lens retroreflective sheeting (CX-184, col. 3, lines 1-15). In distinguishing the rejection of the '159 patent in view of the '889 patent it was argued:

> "The structure of Eagon et al is entirely different from the capsule-type reflex-reflecting sheeting of Applicant's invention and McGrath. In particular, the primer layer 34 is used for bonding the face layer 22 which constitutes a front surface of the finally completed product and as a result, the primer 34 is located on the same side of the protective film as in Applicant's invention. Therefore, Applicant respectfully submits Eagon et al does not suggest a double layer structure as in Applicant's invention which relates to a support layer and not to the protective film as in Eagon et al. Furthermore, the support layer functions in an apparently different way than the protective layer and as a result Applicant respectfully submits it is not proper to apply the teachings of Eagon et al. to the structure of the support layer of Applicant's invention since it is not an analogous art."

(CX-14, Amendment dated June 11, 1986 at 6).

528. Respondents' binder material in the accused sheeting starts curing immediately after it is formulated and cures continuously before and after the thermoforming operation. Probably the majority of the binder material cures after thermoforming. Smook has run no tests to determine how much curing takes place in respondents' sheeting before the cure, i.e. after the thermoforming step. Smook testified that he knows that there is immediate curing to some extent because the kinetics of the chemistry require it. Smook testified that he has no way of knowing how far the cure has progressed at various stages of respondents' process and indeed until he saw DeVries' solubility samples, Smook did not know. Even now Smook testified one still

does not know how far the cure has progressed because "there can be considerable chain extension before insolubilization occurs", and it is masked to some extent by the titanium dioxide present. Smook concedes that probably the bulk of the cure occurs after thermoforming despite the fact that some cure occurs beforehand (Smook Tr. at 1580, 1581, 1582).

529. Referring to the '854 patent, there is thermosetting material in the support film 5A (Kobayashi CPX-60 at 15).

530. In a report of respondents dated Oct. 8, 1981 on "Research and Development of Hi Reflective Sheet", it is stated:

(CX-149 at 9533).

532. DeVries has run razor blade tests, peel tests and solubility tests. The tests were ran on complainant's material, respondents' accused sheeting and then DeVries also ran some razor blade tests on respondents' binder material alone. DeVries' first series of tests were conducted in Japan (DeVries Tr. at 542, 543).

533. DeVries and complainant's Grunzinger went to Japan to set up a lab at complainant's facility to conduct some tests in Japan. He became acquainted with complainant's tensile testing machine and complainant's universal testing machine which is similar but somewhat different from DeVries' machine at the University of Utah. DeVries has had extensive experience with these types of machines but each piece of equipment has its own little differences (DeVries Tr. at 543, 544).

534. A laborabory was set up near respondents' plant. DeVries visited respondents' plant to observe the manufacturing process. He was provided with "Ultralite" sheeting immediately after the thermoforming operation. This material was taken immediately to the laboratory where panels were cut. Some of these panels were stored between dry ice to freeze the material in a condition as close as possible to the thermoforming step. Then

other samples were prepared for running 90 degree peel tests. The tests were designed to be conducted upon the Seibu sheeting that had been cured at room temperature, 35 degree C and 65 degree C for various times. Simultaneously, DeVries was conducting solubility tests (DeVries Tr. at 543-548; CPX 15).

535. The solubility testing was done by applying toluene and other solvents to thermoformed Seibu sheeting after the samples had been allowed to cure at various curing times and temperatures. A piece of the material, about an inch long and one-third of an inch wide, was placed in toluene and observed. The tests showed that with time the Ultralite binder material became insoluble. CPX-21 shows that after two weeks at room temperature, the material was essentially completely insoluble. The same degree of insolubility could be achieved in a shorter period of time at the higher temperatures of 35°C and 65°C (DeVries Tr. at 549-559, CPX-16, CPX-18, CPX-22, CPX-76).

536. DeVries also tested the Seibu Ultralite sheeting by observing under a microscope the affect of the solvent. Certain samples of respondents' sheeting with binder material left on the cover sheet after a peel test were observed as a drop of solvent was placed on the samples. Moreover the same observation was made on respondents uncured sheeting, i.e. sheeting obtained after thermoforming. With the uncured material, the binder would almost immediately dissolve. With the cured material it was observed that the binder material would not dissolve and that the solvent had difficulty lifting the binder material from the cover sheet. The cover sheet had to be dissolved first. The binder material was tightly held to the cover sheet (DeVries Tr. at 559-563, CPX-17).

537. DeVries conducted peel tests not only in Japan and in his laboratory at the University of Utah on the Seibulite sheeting. Samples were prepared by attaching the Seibu sheeting to an aluminum plate with an adhesive and then a backing tape to facilitate pulling and to reinforce it. A razor blade was used to "initiate the failure" between the cover sheet and binder material. The sample was then placed in a tensil testing machine and the peel strength was measured by pulling it. DeVries conducted the peel strength test following curing at different curing times and temperatures after thermoforming. To make the best comparison DeVries would test the same sample at different times. He would peel back maybe half an inch, cure the sample for a particular time and at a particular temperature and then peel back an additional half inch to measure the difference in peel strength. He continued this process until he ran out of the sample (DeVries, Tr. at 564-566; DeVries, Tr. at 578-579).

538. The sample materials upon which DeVries conducted the peel strength are in evidence as CPX-7 - 10, CPX-25 - 28, CPX-30 - 34, CPX-36 - 38, CPX-44, CPX 46 - 48, CPX-50 -54 (DeVries Tr. at 564-566, 575-577, 580, 600-602).

539. In Japan DeVries took some of respondents' sheeting and cut from it some panels, roughly a foot by a foot, and sandwiched the panels between dry ice and put them is a styrofoam container so that "we could essentially freeze in the condition in which it was manufactured." DeVries continued:

> The next thing that we did is that we started marking some samples for running peel tests. We ran a 90 degree floating roller type peel test. And we started conducting those as a function of time and temperature.

> I do not know if I mentioned this, but we had basically three ovens there. The one oven being in the room that we were in at room temperature. The other oven we set at 35 degrees C, and the other at 65 degrees C. And then I started as quickly as I could in the day and a half that I was there conducting tests on the Seibu sheeting as near after thermoforming as possible, and then as a function of time and temperature thereafter, and got a series of results on that.
>
> Simultaneous with that, I was looking at it under a microscope and also running some solubility tests. Because the McGrath patent talks about the material becoming relatively insoluble as it cures, and so I ran those tests. And in a nutshell, those were the tests that were conducted there.
>
> I continued the tests after I got back to my laboratory. I also because of my limited time and wanting to have some duplication, I asked a graduate student to also. I paid him, of course, and rented the equipment. I did not take advantage of him. And I asked him to also run some tests as sort of confirming type tests of my own. Now in a nutshell, those were the tests that were run in Japan and continued after I got back to my lab.

(DeVries Tr. at 544 to 545).

540. Referring to CPX-15, there is a photo (Dep. Ex 141) which shows three ovens one of which was set at room temperature, the other one at 35 degrees C and the third one at 65 degrees C. The photo immediately below is the universal tensile tester, universal mechanical test equipment. The next page on the bottom shows a floating roller peel testing type device mounted with pneumatic grips. The top photo shows a close-up of the floating roller part of the peel testing apparatus. The center photo shows an actual specimen of respondents' product ready for testing. The machine was set at 5 inches per minute. The last page shows the microscope that was made available for investigation of the fracture (DeVries Tr. at 546, 547, 548).

541. CPX-16 are photographs of some vials with toluene in them in which DeVries ran solubility tests of respondents' sheeting at various times after thermoforming and at various temperatures that they were maintained for those times after thermoforming. The tests were conducted in DeVries' lab in Utah although he testified that "we conducted some very much like this in Japan as well" (DeVries Tr. at 549).

542. Vials that have been marked as CPX-18, 19, 20, 21, 22 and 76 are vials that show how with curing respondents' binding material, the material becomes relatively insoluble. The vials are of respondents' material. CPX-18 is done after the binding material was removed from the freezer. Freezing temperature retarded the curing and hence according to DeVries there was measured in Utah essentially identical properties to what was measured in Japan in the lab when DeVries got back with respondents' material (DeVries Tr. at 550, 551, 552).

543. DeVries ran a great many solubility tests in Japan (DeVries Tr. at 553).

544. The material in CPX-18 is essentially completely dissolved. All that can be seen is some of the titanium dioxide (DeVries Tr. at 553).

545. DeVries tried several solvents, all of which gave him the same results. However he was particularly interested in using toluene because toluene is described to be the solvent that is used in the solvent casting manufacture of respondents' product. The Miyata patent (CX-13) discloses toluene used as a solvent (DeVries Tr. at 555).

546. CPX-19 shows results after 52 hours at room temperature. The material is still quite soluble but there is an insoluble residue. At higher temperatures at 52 hours, for example at 35 degrees C, the material has already become essentially insoluble as shown in CPX-20. CPX-21 shows the material after two weeks at room temperature. All that is dissolved is the cover sheet with its red dye. At 65 C. degrees, one gets the same degree of insolubility after only 14 hours as shown by CPX-22. CPX-76 is after a month in the freezer and it shows that very little curing has occurred in the binder (DeVries Tr. 556, 557).

547. Insolubility is shown by a hunk of cross-linked material coming out (DeVries Tr. at 557, 558).

548. CPX-17 are photomicrographs which were taken of a residue left on a cover sheet of respondents' product after a peel test. The purpose of the photo was to investigate the solubility as near as could be done with respect to the interphase. DeVries testified that he found for the uncured when a drop of acetone was put on the sample the sample would almost immediately dissolve and move around. However as the binder material cured the material would be swelling because now the material could not dissolve because it had become crosslinked or "relatively insoluble." The solvent had difficulty trying to lift the material up (DeVries Tr. at 559, 560).

549. CPX-17 shows to DeVries the rather dramatic effect which curing of respondents' product has on solubility as seen though a microscope. It also convinced DeVries that associated with the curing was a dramatic increase of of adhesion of the binder material to the cover sheet (DeVries Tr. at 560, 561, 562).

550. The use of photomicrographs, although indicative, is not a generally used test for determining crosslinked material. It is a test that DeVries "came up with some night, you know, laying there in bed, not able to sleep, thinking about things" (DeVries Tr. at 563).

551. CPX-7, 8, 9 and 10 are some of the samples similar to what was shown in CPX-15 (the center photograph of the second page). DeVries testified that he took some of respondents' sheeting and attached it to an aluminum sheet with an adhesive. Then DeVries put on it some backing tape to facilitate pulling and to reinforce it so that the sheeting would not tear. Next DeVries used a razor blade to "initiate the failure" and then he mounted it in the machine (center photo of second page of CPX-5) and pulled it to determine the peel strength "very similar to what I read out of McGrath patent, I think Example 11." DeVries testified that after doing that he would wait awhile for various temperatures. CPX-10 is a picture of the top portion of the actual exhibit. The lower portion of CPX-10 is the top portion turned over. CPX-10 has notations that the sample cured at 35 degrees C. The time is indicated when the first test was made. Each of CPX-7, 8 and 9 are similar to CPX-10 except for different temperatures or perhaps different times up to the time DeVries ran the peel tests (DeVries Tr 564, 565 and 566).

552. DeVries has made many peel test measurements over the years. There are a number of standards. The test in issue differs a little bit from the standards in that with the test in issue there is a grid work and so there is only narrow intersecting regions or bonds. With a normal peel test, it would be more like scotch tape where "you have it completely across. But since we are only running comparison purposes, I do not see that as a major

problem." DeVries testified that there is the same basic geometry both right after thermoforming and after the material has been subsequently cured (DeVries Tr at 566, 600).

553. CPX-14 is an envelope that contains samples CPX-55, 56 and 57 very comparable to CPX-7. The samples resulted from checking out the apparatus and becoming acquainted with the equipment that DeVries knew was similar and comparable to DeVries' equipment. The samples were run at complainant's facility in Japan before getting respondents' material. DeVries believes CPX-55, 56 and 57 are samples of respondents' sheeting provided to DeVries by complainant's attorneys (DeVries Tr. at 568, 569).

554. CPX-11, 12 and 13 are samples that were used to familiarize DeVries with the equipment (DeVries Tr. at 570, 571).

555. CPX-23 is a series of samples that were aged or cured at room temperature and made from respondents' finished sheeting obtained from respondents' plant (DeVries Tr. at 572 to 575).

556. Envelope CPX-24 contains a group of test panels designated CPX-25, 26, 27 and 28 and these are a similar seried that were cired at 35 degrees C and tested at periodic intervals (DeVries Tr. at 575)

557. Envelope CPX-29 contains a group of test panels designated CPX-30, 31, 32, 33 and 34 which is another series that was prepared in DeVries' makeshift lab and run first at room temperature then cured at 65 degrees C (DeVries Tr. at 576, 577).

558. CPX-35 is an envelope that contains CPX-36, 37 and 38. CPX-39 is an envelope that contains the test panels that DeVries prepared, viz. CPX-40, 41, 42, and 43. CPX-44 is an envelope containing actual test panels

CPX-45, 46, 47 and 48. CPX-49 is an envelope that contains test panels CPX-50, 51, 52, 53 and 54. They are all additional test panels at various temperatures and times similar to the groupings DeVries has testified to before (DeVries Tr. at 600, 610). (DeVries Tr. at 600 to 602).

559. CX-183 are the experimental results obtained on the peel test referenced by the foregoing exhibits. It shows peel strength as a function of time and cure. The first page shows the peel strength as a function of time and cure at room temperature and the third page is similar but done at 35 degrees C. The fourth page shows curing at 65 degrees C. The last and the second pages are the same. The peel tests reported in CX-183 showed to DeVries that respondents' sheeting did cure with time after thermoforming such that in conjunction with the earlier evidence in the vials it became relatively insoluble and that the adhesive strength of the sheeting did indeed increase as described in the '159 patent (DeVries Tr. at 581, 582).

560. Referring to the first page of CX-183 which shows peel strength as a function of time with curing at room temperature, each of the square data points represent the average of the five measurements from five different samples (although the sample could be the same) of peel strength at the time shown on the abscissa. The graph shows that as near after the thermoforming step as possible it took 4.7 pounds to separate the cover sheet using the peel force measuring machine. At about 1800 minutes curing it went to near six pounds. The last data point has to be viewed as the lower limit of the bond strength because at that point the cover sheet was no longer separating from the base sheet. It was pulling the sample off the aluminum panel directly. Each data point represents the results for a sample that is aged by the length

of time shown on the abcissa and tested. The third page shows peel strength as a function of time with curing at 35°C. The fourth page shows peel strength from curing at 65°C as a function of time (DeVries Tr. at 581, 582, 583, 584, 585, 586, 588; CX-183).

561. CX-183 was prepared by DeVries. DeVries testified that it is based on a test to determine the peel strength of the intersecting bonds described in the '159 patent and to determine whether the last clause of claim 1 of the '159 patent, i.e. whether the bonds have increased bond strength to the cover sheet and base sheet, has been met. The razor blade tests shows whether the clause of claim 1 "characterized in that the binder material is selected from materials that show increased adhesion . . ." was met (DeVries Tr. at 1115, 1116).

562. The data points on the first page of CX-183 are the average of five samples tested for peel strength after the time show in the time scale. For example, after thermoforming the peel force measured about 4.7 pounds and at 1800 minutes, peel force was nearing 6 pounds. The last data point on the first page of CX-183 is the lower limit of the bond strength because the bond between the cover film and binder material became so strong that the cover sheet was no longer separating from the base sheet but the sample was being pulled off the aluminum directly (DeVries Tr. at 583-584).

563. Respondents' Smook was not critical of DeVries' technique (Smook Tr. at 1554).

564. CPX-78 is some of the respondents' accused sheeting that DeVries had cast in plastic and on an angle to the surface and then had the thing polished so that DeVries could observe it with his microscope. CPX-77

is the picture of what DeVries observed through a microscope at about 400X. CPX-78 is a casting plastic that is cast around some small strips of the accused sheeting obtained when DeVries was in Japan. The surface was polished so that DeVries could observe as best he could the interface between the binder and the cover sheet. DeVries did not see a sharp demarcation between the cover sheet and the base material but rather a blending. It shows according to DeVries an interphase rather than an interface (DeVries 603, 604, 605).

565. Interphase, according to DeVries, is that region where there is intertwining of the two separate boundaries. In contrast interface would be a sharp demarcation from one to the other (DeVries Tr. at 605).

566. The series of tests which began about January 21, 1988 in DeVries' lab were the razor blade tests. DeVries had received from respondents in Japan a number of boxes that contained a number of chemicals which he thought might possibly be used for running tests, depending upon how much time was had (DeVries Tr. at 957-959; RX-46).

567. When DeVries received the chemicals from Japan which was several days prior to January 22, 1988 DeVries had decided that because of his restriction of time that the only material that he was going to investigate was respondents' ST-620-W which was the copolymer for binder layer one without the white pigment titanium dioxide and isocyanate designated Sumidur N-75 and a crosslinking agent (DeVries Tr. at 964 to 968).

568. In his tests DeVries mixed the solution of binder layer one which had a solvent in it with the cross-linking material, in the proportions respondents used in making its binding layer one which is contacted with the

cover sheet, to form a coat of material on a film of release paper. DeVries never took any steps to make respondents' binder layer two. The binder layer one was then coated out as a layer but not on a waffle or gridlock pattern of the '159 patent. Then the layer was dried for roughly four hours at which time it was no longer tacky. DeVries cannot say with certainty how much solvent was left in the layer after it was dried for about four hours. DeVries' graduate student ran tests to estimate the solvent remaining in the solid layer after four hours' drying and there was estimated something like two to three percent of solvent was obtained by leaving the material after four hours drying in an oven at 60 degrees C for 24 hours. The tests were not a systematic study. It might have been as much as four percent solvent was evaporated in the twenty-four hours. While what was evaporated off in the twenty four hours could be solvent, it could also be other volatiles which were driven off, moisture being one of the other volatiles (DeVries Tr. at 970-977).

569. With respect to the material that was dried about four hours, it was cut out into small pieces and the pieces were deposited on polymethyl methacrylate commercial sheets DeVries had purchased or on respondents' cover sheet that had been bonded to aluminum. Then the composites were placed in the oven and hot pressed. Thereafter the razor blade test of the '159 patent was conducted at which time they were placed in an oven at 60 degrees C. for various periods of time. The longest of any time was around fourteen hours. DeVries did tell his graduate student to put down the exact time for everything and the times the materials were in the oven were written on the original tape that was delivered to the office of complainant's attorneys.

"But somewhere in the copying of the tapes and that type of thing, that label was destroyed, or misplaced, or something. I do not know what happened to it. So I have to rely on my memory." It was somewhere between two and fourteen hours. A great many of said tests were run by DeVries' graduate student. DeVries ran probably around ten or so (DeVries Tr. at 977-978).

570. The primary teaching tool for DeVries for running the razor blade tests was the '159 patent (DeVries Tr. at 978, 979).

571. The first time that DeVries read the '159 patent was roughly July or August 1987. It was not the first time that he had ever seen a test like the razor blade test described anywhere. DeVries testified that there "are a great many tests like that." DeVries' reading of the '159 patent was the first time that he ever saw a test described using a razor blade in the fashion that DeVries used it on video tape CPX-70. DeVries has never seen that test of CPX-70 described anywhere else. Off the top of his head there are the Boeing wedge test which is a qualitative type test and various scratch tests and a variety of abrasion tests and the pencil test all of which are qualitative tests that come to mind to DeVries when he read the razor blade tests of the '159 patent (DeVries Tr. at 979-981).

572. The pencil test is conducted by taking pencils of varing hardness and scratching them over the organic coating to see which ones will scratch through. It is sometimes called a pencil hardness test. As the test can be interpreted, the hardness of the lead in the pencil would be an indication of the strength of the materials or the tightness of adhesion (DeVries Tr. at 981, 982).

573. In a Boeing wedge test, one puts materials which has a wedge held in place in the adhesive binding the materials which wedge holds the materials open in an environment one is interested in investigating and there is observed regions of debonding. There is not the lifting seen in video tape CPX-70 (DeVries Tr. at 982).

574. DeVries testified prior to conducting the razor blade tests that he has been an avid do-it-yourselfer in refurbishing furniture and that type of thing and that he has essentially run the '159 razor blade test in removing paint and varnishes from old things and also he was provided a video tape RPX-49 that he looked at and saw complainant's personnel explore the material of the '159 patent. In addition DeVries testified that complainant's Grunzinger gave him some pointers on how Grunzinger did it in Grunzinger's exploratory tests (DeVries Tr. at 983, 984, 1120, 1121).

575. DeVries saw RPX-49 tape alone in his own home on his VCR and saw it a second time at least with his graduate student (DeVries Tr. at 988).

576. DeVries agrees that all of the following could affect the razor blade test: the time that the sample is dried, the temperature for drying the sample, the time that the sample is in the oven, the temperature of the oven while the sample is in it, the angle that the blade is maniuplated, the strength of the person manipulating it, the sharpness of the blade and the manner in which the blade is manipulated, turned, twisted, and set sideways. DeVries later testified that with respect to his recollection of those factors, he does not see where they would have a prominent effect with respect to the suitability of the test materials for use in attempting to construct a sheeting if in fact the tests showed that "it came off relatively easy before

cure, and difficult - - with a lot of difficulty after cure." DeVries testified "We did our best to keep all of the parameters the same. So I do not see where they would have a prominent effect." In the razor blade tests DeVries conducted the person who was razor blading it before cure was exactly the same person that was doing it after cure. DeVries does thinks that any reasonable adult would not have the trouble mustering the strength to run the razor blade test in a reasonable manner. In the razor blade tests the tests were run before cure and after cure on exactly the same sample so it had to be dried the same length of time because it was the same sample. DeVries thinks that a reasonable person would dry the sample until it feels dry. As long as one is consistent, DeVries does not feel that it would matter unless one dried it so long that the cure developed too far. DeVries recollected that in respondents' answers to interrogatories respondents gave a range of times from the time that the material is solvent cast until the time the material is thermoformed. He concludes that apparently respondents considered the material to be rather tolerant of changes in this condition (DeVries Tr. at 990, 1070 to 1076).

577. In the razor blade test, if the angle of the razor blades was held at 45 degrees instead of 30 degrees and the binder was found to be easier to separate before curing than after curing, DeVries does not feel that in the tests he conducted that the difference in the angle of the degree would eliminate the sample as one that could be used in the sheeting of the '159 patent. In the absolute sense an oven off a ten degrees temperature would make a difference. However the purpose of the oven was to accelerate cure and DeVries does not see how it would be a factor since the temperature was kept

constant. DeVries testified that his earlier tests had already shown that one could accelerate cure, as measured by decrease in solubility and increase in strength by increasing the temperature and thus a temperature for the curing in the razor blade test was chosen to be near the temperature of the earlier tests but slightly below (DeVries Tr. at 1069).

578. The razor blade tests that DeVries ran were before and after some period of time and temperature exposure of the specimens (DeVries Tr. at 990, 991).

579. There can be at least two factors that may account for any differences there were in the bond strength of the laminates seen on video-tape CPX-70, viz. the effect of crosslinking and the effect of solvent evaporation. DeVries made no determination as to what effect solvent evaporation played in the razor blade tests (DeVries Tr. at 991).

580. What DeVries did in testing was to measure the bond strength and at the same time measure any decrease in solubility and DeVries testified that he found associated with the decrease in solubility an increase in bond strength (DeVries Tr. at 991).

581. CPX-71 to 75 are samples on which DeVries conducted the razor blade test which he testified was tested as described in the '159 patent (DeVries Tr. at 606).

582. CPX-74 and CPX-75 comprises polymethylmethacrylate cast sheetings which DeVries purchased in Salt Lake City; respondents' binder material one and hardening agent with titanium dioxide (the whitening material) which had been mailed to DeVries by respondents are solvent cast on release paper, dried for various periods and then removed from the release

paper and hot pressed to the polymethyl methacrylate sheet much as described in column 7, first paragraph. Then DeVries used the razor blade and found that the uncured binder film could be easily removed with the aid of a razor blade. The same sample was then placed in an oven at 60 degrees for anywhere from about two to fourteen hours for various tests and then removed, cooled to room temperature for 15 minutes or so. The cured sample was then found to be very difficult -- it was not easy to remove clearly the binder from the polymethyl methacrylate cast sheet. As to CPX-74 and CPX-75 a portion of the sheeting had been removed with the razor blade before the 60 degree C. test and after the 60 degree C test (DeVries Tr. at 606-615).

583. With respect to CPX-71 and 72, they are aluminum sheeting. When DeVries returned from Japan DeVries bonded to the sheeting with a heat activated adhesive some of respondents' cover sheet. From then on the operation was very much as with the polymethyl methacrylate in that DeVries took one of the solvent cast film of respondents' binder one and hot press bonded it to the top surface of respondents' cover sheet. The same type of razor blade tests, as with CPX-74 and 75, were performed on the composite prior to, and after, hot press bonding and with prior and subsequent cures in an oven at 60 degrees C. at from two to fourteen hours (DeVries Tr. at 616, 617).

584. CPX-74 and 75 uses polymethyl methacrylate commercial sheeting purchased by DeVries in Salt Lake City for the cover film and CPX-71 and 72 are respondents' cover sheet bonded to aluminum with adhesive and then respondents' solvent cast binding sheet bonded to it as described in col. 7, first paragraph of the '159 patent (DeVries Tr. at 617).

585. Respondents' binder material was a liquid and had toluene as a solvent so it can be spread out. The same binder material is used in CPX-71 and in CPX-74.

586. CPX-72 is another sample that for all intents and purposes is identical to CPX-71 (DeVries Tr. at 618).

587. CPX-73 is DeVries' effort to try to run a qualitative type peel test in which on a sheet of polymethyl methacrylate DeVries had in his lab there was cast on a strip of respondents' solvent cast material and then on top of it was placed respondents' cover sheet. According to DeVries he then ran a hand type test as a qualitative measure of the force needed to remove the cover sheet from the binder material (DeVries Tr. at 618, 619).

588. CPX-70 is a video tape that DeVries made of his hands in which he is conducting the tests on some of the samples that has been described and relates to the razor blade test and the hand peel test (DeVries Tr. at 621, 622).

589. Referring to video tape CPX-70, the first thing seen is the polymethyl methacrylate cast base sheet after the hot press bonding but before the oven cure. DeVries testified that a relatively easy time is had in lifting the binder sheeting from the polymethylmethacrylate cover sheet, with the aid of the razor blade as described in column 7, first paragraph of the '159 patent (DeVries Tr. at 623, 624).

590. DeVries testified that a second type of panel on CPX-70 with the video counter starting around 47 has bonded some of the respondents' cover sheet with the binder being lifted with a razor blade and the binder can actually be peeled with DeVries hands (DeVries Tr. 624, 625).

591. Starting at video counter 108 of CPX-70, DeVries testified that it shows how much more difficult it is with the aid of the razor blade to get some of the binder material up and that the cover sheet that is bonded came up very often (video counter is at around 169) (DeVries Tr. at 625, 626).

592. DeVries ran about ten tests and CPX-70 are representative of some of the tests ran. DeVries testified that all of the tests show basicall the same thing as to each of lifting before but not after the cure. The video counter is now about at counter 45 (DeVries Tr. at 623, 624).

593. There is then seen on video tape CPX-70 a second type of panel in which there is bonded some of the respondents' cover sheet and now DeVries is lifting it up relatively easily with a razor blade. DeVries is not cutting with the razor blade but rather using the razor blade as a little grip to grab the sheet. It is shown that DeVries can actually peel the binder material with his hands as shown at video counter (DeVries Tr. at 625).

594. Now the video tape shows some of the cured material and shows, according to DeVries, how much more difficult it is to lift the binder material with the aid of a razor blade. This is after curing. The video has just passed through counter 184 (DeVries at 627).

595. The razor blade tests shown on CPX-70 would not determine the amount of interphasing or interfacing. What the tests will determine is how tightly is the cover sheet and the binding material bound both subsequent to a pressure bond forming step and then subsequent to a curing step (DeVries Tr. at 630).

596. A solvent could act as a plasticizer in which case it would actually make the bonds a little bit stronger or a solvent could be a weakening agent on the bonds. Accordingly DeVries ran a peel test on

respondents' sheet material from his freezer and which had not cured. Then the sample was put on a vacuum, first for 30 minutes and then for a longer time when DeVries would pull some of the solvent off. DeVries testified that if the solvent had a significant effect on the strength, he would expect to see the effect in the uncured sample. DeVries testified that he saw a negligible effect as the solvent was pulled off. The next day in another test DeVries measured the amount of solvent that had been removed and found that it was roughly three-quarters of one percent (DeVries Tr. at 634-637).

597. DeVries concluded that his tests showed that the curing of respondents' binder material through which the material becomes relatively insoluble as determined by solubility tests results in a substantial increase in the bond strength which the patentee of the '159 patent calls the "narrow intersecting thermally formed bonds" (DeVries Tr. at 637).

598. DeVries testified:

> THE WITNESS: I still have, had and still have now, a number of sheets of this material that has been kept in my freezer at this low temperature that I know for a fact hasn't cured because I can run the solubility test on it. I took one of these sheets out and cut out of it some samples. I bonded those to aluminum just as I have talked about here and then ran a peel test on it and after running the peel test put it in the vacuum, first for 30 minutes and then another 30 minutes, where I would pull some of the solvent out and then I ran the peel test again. If the solvent had a significant effect on the strength one way or the other, I would expect to see it. I saw a negligible effect, actually a slight decrease in strength as I pulled the solvent out, and I could see with my eyes that it was not behaving as plastic right at that tip, the point where it's peeling it up fron the bottom thing. I could see with my eye that the white material wasn't pulling up as much, so I would attribute it to that. But I don't want to say it was decreased, because I didn't run enough tests, but it certainly wasn't increased.

JUDGE LUCKERN: What test was this? A peel test?

THE WITNESS: A peel test. Very much like the ones I described before.

Then I went home, quite satisfied with myself, and woke up again, once again, saying hey, I still have a question. How much solvent did I pull out of the material? This is when I missed my flight. So I ran back up to my lab the next day and took some samples and I did not mount them on the aluminum first. I weighed them very carefully on my electro balance and then put them in the vacuum, I had room for two samples in there so I only ran two because I didn't want to overlap. I kept them in there for an hour and then ran the peel test and got exactly, I just straddled the average of the four tests I'd run the day before so I'm seeing the same thing.

I measured the amount of solvent that had been removed, and it was roughly three-quarters of one percent, so I had removed quite a bit of solvent. And if anything, the strength was a little bit lower than it was before.

BY MR. EDELL:

Q A little lower after curing?

A Before the vacuum treatment. I can give you the numbers if you'd like. The average before was slightly over four pounds, very much like what I had found in the earlier tests that I'd run, certainly within the same range; and after, the average was 3.8. Like I say, I don't want to put a significance on that small difference on the few number of tests, but it at least did not increased markedly as you'd expect it might if the solvent had a very very large effect.

Q What do your tests indicated to you is the cause for the increased adhesion after curing?

A Basically as described in the McGrath patent, the curing of the material through which it becomes relatively insoluble as determined by our solubility tests, results in a substantial increase in the bond strength of what I think he calls the "narrow intersecting thermally formed bond."

(DeVries Tr. at 635 at 637).

DeVries also testified:

Is it correct -- I mean, is my understanding correct, again, it's probably clear, but I just want to -- is my understanding correct that the results that you performed on the Respondent's sheeting in Japan corroborates the results that you found from the material that resulted from the accelerated polymerization of Respondents's material in your labs later on in Utah?

* * *

THE WITNESS: I understand what you're saying, Your Honor. And the answer is yes, but it goes a little bit beyond that, If I might elaborate.

JUDGE LUCKERN: Yes, you may.

THE WITNESS: We also ran those accelerated tests in Japan. So It was not just at Utah, but also over there that we --

JUDGE LUCKERN: Could you just briefly -- you may already have it all over the record -- could you just briefly tell me how that's so?

THE WITNESS: Yes. We took samples -- we took samples while we were in Japan, and cured some of them at room temperature -- I was only there for a day and a half, though. So I was only able to do a day and a half at room temperature.

But we also had two additional ovens other than the room temperature oven -- the room we were in. And one of those was set at 35 degrees; and the other at 65 degrees Centigrade.

And we would put samples in there for some period at time; then take them out and run the peel tests on those, and also solubility test ...

And so we did accelerated test in Japan as well. We started that series there, and then came back. And now I'm using an editorial way because I took advantage of my graduate student to help because these are very time consuming tests; and I'd rather pay him.

And he'd duplicate everything I did in Japan on some of the product that we'd kept at dry ice in my own lab as well. So when I answer your question about doing accelerated tests in my lab, the answer is yes, but I also did them in Japan.

Was that responsive to your inquiry?

JUDGE LUCKERN: Well, also -- and would -- and you've done results on the final sheeting, too, haven't you?

THE WITNESS: Oh, this was no final sheeting. All of these tests that I've just described here were on final sheeting, Your Honor.

JUDGE LUCKERN: But I mean, final sheeting that you got directly from Seibu, too. You made tests on that, haven't you?

THE WITNESS: Yes, all of these -- these tests.

JUDGE LUCKERN: I mean, the final sheeting test doesn't involve any accelerated polymerization, does it?

THE WITNESS: Accelerated curing, yes. Your Honor. See, we received it right after thermoforming when essentially no curing had occurred --

JUDGE LUCKERN: I see what you're saying. Okay. I'm following you. All right. Okay.

Let me ask you this. There was some testimony with respect to the effects of solvent on the razor blade test. Remember that on cross examination?

THE WITNESS: Yes.

JUDGE LUCKERN: And you seemed to -- I know the percentage was a low 2 or 3 -- or whatever the record is, is there.

Could you just tell me what these -- what your understanding is of these effects of solvent that could be on these tests?

Everybody seems to understand there could be some effect, but I don't know if the record is clear as to what we're talking about as to how it could be effected.

THE WITNESS: Your Honor, the only thing I have first hand knowledge of are the tests that I ran just before coming here in which I placed actual Seibu sheeting in an oven --

JUDGE LUCKERN: Yes, I --

THE WITNESS: -- and pulled out part of the material -- part of the solvent.

And in those cases there, in pulling out 0.75 percent -- which I would estimate would be a half, or a third or something of the total amount that was in there -- had no effect basically; and if it was in effect, it was actually a slight decrease.

But let me say no effect because it's sort of in the scatter band if you follow what I'm saying. But it was a slight decrease.

JUDGE LUCKERN: How could it have an effect? I mean, I guess this is maybe what I'm asking you. Maybe my question wasn't clear.

THE WITNESS: Well, one method -- now let me just describe -- one method is it could be acting as a plasticizer, which makes the plastic less brittle. And that would explain this slight decrease.

In many -- in many polymers, in plastics, they add a liquid component or something to this order -- an oil that makes it plastic -- plasticizes it. It makes it tougher.

If I can use a crude example that I use in my classes. For those that are as old as me, you remember the early PVC steering wheel --

JUDGE LUCKERN: I'm older, so watch that.

THE WITNESS: All right. Well, you'll remember these then -- the old PVC sterring wheels that had plasticizer in them; and on a hot day you'd get in and they'd feel very oily.

And then after a while, as all that oil got out they'd start cracking, and that kind of stuff; and you'd see those little cracks -- that's one effect.

It could be acting as a platicizer that you pull out, and as a consequence of that the strength actually goes down.

Now I don't want to say the strength goes down because I'm not that confident. But it appeared to go down a little bit.

I believed I gave you the figures it was something over 4 pounds, down around to something slightly under 4 pounds.

But I really don't know, other than hat one test, which would indicate to me that at least by pulling that much

> solvent out, I had negligible effect upon the pill strength.

(DeVries Tr. at 1124 to 1128).

599. CPX-79 are two vials as to complainants' sheeting in which DeVries had uncured material. Here the cover sheet is green. Other than the titanium dioxide (white pigment) the uncured material was completely soluble. After cure, having gone through the electron beam treatment the material had significant insoluble component. Thus the cover sheet dissolved while the base and binder or cushion sheet was undissolved. Those vials represent solubility tests run on complainant's sheeting. DeVries also ran some more solubility tests when he got back to Utah and the results were identical. CPX-80 are photomicrographs very similar to photomicrographs described earlier by DeVries with respect to respondents' sheeting. Here DeVries observed under his microscope the residual material left on the cover sheet after the peel test. The uncured material is easily lifted by the solvent from the cover sheet while the cured one is much more tightly bound (DeVries Tr. 642 to 645).

600. DeVries ran a number of different tests on respondents' material beginning in Japan about December 21, 1987 and a second series of tests in January, 1988 and a third set of tests the end of January (DeVries Tr. at 940-942; RPX-48).

601. RX-45 sets forth respondents' sheeting composition and ingredients including proportions of ingredients (DeVries Tr. at 945).

602. According to DeVries, the '159 patent suggests three mechanical tests and a physical property test, viz. a solubility test (DeVries Tr. at 946-947).

603. DeVries did not suggest a heat shrink test because he had been informed that respondents' product did not have an oriented cover sheet and hence DeVries would not anticipate large amounts of shrinkage when the sheet is heated up. Hence DeVries did not see that a heat shrink test would be of much use (DeVries Tr. at 947).

604. With respect to the tests started by DeVries about December 21, 1987, one was a peel test, one was a solubility test and a third was a microscopic observation which might be characterized as being a modified solvent test. Those tests, which extended beyond Christmas when DeVries came back to the United States, established that there was a greater force necessary to separate the plies of the product sometime after aging as compared to immediately after thermoforming. Also the tests established that the material was less soluble as the curing time went on. The microscopic test convinced DeVries that the material that adhered to the cover sheet held much more tenaciously as the material cured with time (DeVries Tr. at 952, 953).

605. DeVries is not sure that it is true that as the time went on either in the oven or at room temperature there were at least two factors working, one being cross-linking and the other being solvent evaporation. He agreed that they both affect the bond strength of the laminate. The first series of tests DeVries ran did not take into consideration the effect solvent evaporation had on the bond strength (DeVries Tr. at 953).

606. DeVries' deposition on Jan. 9, 1988 prompted him to make further inquire is about the effects of solvent (DeVries Tr. at 960, 961).

607. Over a period of time DeVries found that there was a decrease in solubility in the binder material that he mixed and the decrease in solubility occurred as a result of cross linking that was going on during the period of time. DeVries would presume that during the same period of time, i.e. during any period of time following the preparation of the sample, there was also a decrease in the solvent contained in the binder material that is involved although DeVries has no first hand knowledge. DeVries made no test, at least by the end of Jan. 23, 1988, of any kind to determine what was the effect of solvent evaporation on the bond strength. It is good practice that the same sample is tested repeatedly so that one is comparing things as near as possible to the same thing as it was before and DeVries tried to do that. (DeVries Tr. at 991, 992, 993, 994).

608. Around two o'clock in the afternoon of January 29, 1988 DeVries took a number of the sample panels of respondents that had been stored at dry ice temperature and took small pieces from the samples and put them in vials with toluene to see if the samples were still soluble and they were. DeVries prepared some peel samples and ran peel tests on them. Four samples were took. Those were then placed in a vacuum system and held in a vacuum for half an hour and then DeVries with his graduate student conducted another peel test, put the samples back in the vacuum for another half hour and conducted still another peel test at the end of that time. Total exposure to a vacuum would be in the neighborhood of 10 to the minus four torr. The samples were left in the vacuum for a total of an hour. Then a peel test was conducted on the same samples. DeVries concluded that the removal of the solvent, if anything, did nothing to, or decreased, the peel strength. DeVries did not

know until the next day about how much solvent was removed. He was sure that some had been removed because DeVries could smell it coming from the vacuum pump. He was not certain how much had been removed (DeVries Tr. at 998, 999, 1000).

609. The four samples placed in a vacuum chamber and from which solvent could be smelled were each a one inch strip of respondents' Ultralite what had a reinforced adhesive on one side and on the other side was mounted with glue on an aluminum plate. The main purpose for having a vacuum chamber in his lab was to aid in pulling solvent during solvent casting operations. DeVries has done quite abit of solvent castings in the work that he does (DeVries Tr. at 1001, 1002).

610. DeVries was reasonably certain that there was some residual solvent in the samples he brought back from Japan (DeVries Tr. at 1002).

611. The sample was sandwiched between a plastic, reinforced tape and aluminum while it was in the vacuum chamber. The solvent did not have to go through the backing tape to escape (DeVries Tr. at 1003, 1004).

612. The next day DeVries took two different samples than the previous day but prepared the same way except not bonded to the aluminum or to any reenforcing tape on the top and exposed the samples to the vacuum after being weighed. The samples were placed in the chamber and the vacuum was brought up rather slowly and then held there for one hour. The samples were then removed and weighed and the weighing indicated that the samples had lost three-quarters of one percent of their initial weight which DeVries attributed to volalites that has been lost. Samples were then mounted on sheets very much as with CPX-31 with the strapping tape on the back and peel tests ran

very much as before. The two samples produced peel strength results that exactly straddled the average of the previous four samples of the day before suggesting to DeVries that the results were consistent and valid. There was a slight decrease in the strength of the force required to propagate the peel, not an increase by a slight decrease, essentially flat (DeVries Tr. at 1006, 1007).

613. DeVries did not know the solvent content in the samples before he conducted the tests on the two samples in an vacuum oven. DeVries did not run a "before" and "after" peel test on those samples. Also no determination was made as to precisely how much solvent as opposed to other volatiles was removed from the sample during the vacuum chamber test. Also there was no determination as to how much solvent was left remaining in the sample after the tests were completed (DeVries Tr. at 1010, 1011).

614. It would be a major research test to determine whether there would be an optimum isocyanate level above and below on which the peel strength would increase (Tr. at 1012, 1013).

615. DeVries did receive from respondents materials from which one could have determined the effect of isocyanate on bond strength had DeVries had the time to do it. DeVries could have gotten a good handle on it in a couple of weeks of research or maybe longer. DeVries probably would have started out with the amount of isocyanate that respondents have in binder one and then increased or decreased the isocyanate from that amount and ran a series of tests and cast up the various materials (DeVries Tr. at 1013, 1014).

616. According to DeVries, his job was to run some tests to see if respondents' product behaved as outlined in the '159 patent and DeVries thinks that within the time limits that he had, he did a very thorough job with it. The amount of time was the time DeVries was able to squeeze out of an extremely active research teaching and administrative role at the University of Utah. He testified that he was too busy to do as much as he did and that when he does things he wants to do them thoroughly and well. DeVries does not apologize for any of the tests he ran and he thinks they were informative (DeVries Tr. at 1014, 1015, 1016).

617. When asked what DeVries thought about running a test on a solid layer, one with isocyanate and one without isocyanate and making a peel test on the two samples and get comparative values, DeVries testified "If I would have had time that would have probably been a nice experiment to run." "[I]t would have been a logical extension of what we had done." Such a test occurred to DeVries after running the tests but he could just not find the time. He did find the time to run the volatile evacuation tests on the 29th or 30th of January but those tests are much less time consuming tests and DeVries agreed that how much time he had was paramount in DeVries' mind (DeVries Tr. at 1016, 1017).

618. DeVries testified that respondents' binder material shows increased adhesion to the cover sheet when a solid layer of the material has been previously laminated to the sheet and cured as seen by the razor blade test on the video tape CPX-70. There was increased adhesion subsequent to curing the binder material to the cover sheet. After curing DeVries testified that the respondents' binder material became less soluble, which is evidence

of curing, and the bonds between the cover sheet and base sheet had increased in strength (DeVries Tr. at 675).

619. In the razor blade test performed by DeVries, De Vries laminated the sample of binder material at a platen press temperature of 200 degrees F (DeVries Tr. 1079, lines 21-25). Respondents laminate their binder material to the cover film using an embossing roll at a temperature of between about 180 and 190°C (Kobayashi RX-35 at 17-18). DeVries also used an "accelerated" curing method to cure the binder material for his razor blade test (DeVries Tr. 1093-1095). DeVries did not know what effect the accelerated times and temperatures in the razor blade test that he ran would have on the chemical reactions within respondents' material and how they effect curing (DeVries Tr. 1108).

620. DeVries testified:

> JUDGE LUCKERN: If -- however, if your accelerated duplication -- and I'm not making any, you know, indication that it wasn't.
>
> But if your accelerated duplication of the curing step is not equivalent to what Respondents actually does, then would I be correct to come to the conclusion that really I can't pay any attention to your results?
>
> Do you understand what I'm asking you?
>
> THE WITNESS: I understand what you're saying. And let me just answer that by saying that if you look at -- I don't have the exhibit number on this one here. This is my copy.
>
> JUDGE LUCKERN: CX-183. CX-183.
>
> THE WITNESS: CX-183, and the exhibits in the vials.
>
> * * *
>
> THE WITNESS: Yes. It's the peel strength as a function of time at three different temperature levels -- room temperatures 35 degrees C, which would be near, then, the

temperature that the Seibu product is used; and 65 degrees C, which is near the temperature we're talking about here -- five degrees higher in each case.

And if you look at this you can see that in a matter of hours you can get as much cure at 65 degrees C -- as manifest by increase in peel strength -- as you do in weeks, really, or several days, anyway, at room temperature.

Now this isn't the only evidence we have for that. We also have the evidence of the vials -- the solubility. That's not the only evidence we have for it, Your Honor.

We also have the evidence of the microscope, where you're looking in there, and you can see right in there the difficulty with which the solvent has a lifting the -- the binder material from the cover sheet.

* * *

And it seems that that's somewhat appropriate here. If these things behave exactly the same in all those other ways -- peel strength, solubility, microscope toluene drop adhesion lifting up, then I didn't have the ten days to wait anyway, if you follow what I'm saying, after I got the material.

So I had to do something. And I did the best I could in the time. Now granted, if I had unlimited time -- which none of us have -- I mean, if you're going to wait to run every test you possibly can, you'll never get anything done.

But nonetheless, here I have three indicators that a few hours at 60 or 65 degrees is like several days at room temperature.

* * *

JUDGE LUCKERN: But what I hear you saying, I think -- and I'm sure you said it, but I just want to make sure, and then I'm going to let Mr. Gardner take over -- is that you're satisfied that this accelerated cured step that you performed on the Seibu product is equivalent to what Seibu actually does in its process.

THE WITNESS: Yes, I've accelerated it.

There may be some changes, but I don't think -- you know -- they are going to be secondary things.

JUDGE LUCKERN: They wouldn't affect the results.

THE WITNESS: They do not affect my conclusion.

JUDGE LUCKERN: All right. That's your testimony.

THE WITNESS: That's my testimony, Your Honor.

Q You are satisfied that the accelerated cure from hours to 2 hours, and the accelerated temperature from to 60 degrees on the centigrade scale wouldn't effect the results that you obtained in the razor blade test?

A You know, you keep on absolutes. And I guess -- there's the old adage, never say never. And I want to modify one thing. You said -- you keep saying two hours, and I want to say a minimum of two hours, because I ran a lot of tests; and I know some of them were as long as 14 hours, do you know what I mean? Not a lot of tests -- I ran a number of tests. And some of them were as long as that.

It's my opinion that in cooperation with all the other things that I have presented here, a series of what I consider to be very, very careful experiments were made before this one here.

And what we saw was an increase in adhesion as cure occurred, where cure is as defined in the McGrath patent. Now I can say that different ways, but I don't know if I'll ever get it any more clearly said than that, because maybe my -- limitations in by [sic] own ability to express myself.

But I feel that we have a preponderance of evidence here that as cure occurs, as measured by the method that McGrath himself spelled out, that the material becomes insoluble -- that accompanying that is an increase in peel strength; is an increase in the difficulty with which -- is the difficulty of removing the material from a sheet with a razor blade, as is evidenced by looking at the solvent, trying to lift it off the cover sheet.

To me it seems overwhelming, but -- as I look through it. That evidence is there.

* * *

Q Are you confident that the curing -- can you focus for me, and with me, on the razor blade test?

Are you confident that the curing that occurred during the two hour, or however many hours, at the temperature of 60 degrees -- that that curing caused an increase in adhesion?

A I am confident that the material cured, and I am confident that that was accompanied by an increase in adhesion. And I don't want to get involved in the mechanisms; although I think the mechanisms that McGrath describes are reasonable mechanisms. But he, himself says he doesn't want to be tied down to a single mechanism.

But I'm confident, yes, that that material cures, and accompanying that cure is an increase in adhesion.

Q And is -- are you confident that that increase in adhesion is caused by the cure?

A Looking at all of the data that I have I'm confident that the increase in bond strength that's described in here [claim 1], and the increase in adhesion --

* * *

THE WITNESS: In Claim 1 -- that as it cures that cure is accompanied by an increase in adhesion.

I have seen that in every test that I have conducted, which have been extensive.

* * *

Are you confident that the increase in adhesion that you say you found in your test was caused by the cure?

A I'm sure that's one of the causes; there may be others. I'm not going to -- like I say. You never say never. But I am confident that is a major cause.

Q Are you confident that the -- what ever increase in adhesion you found wasn't caused entirely by the evaporation of solvent?

A I'm confident that that's not the case.

Q Have you studied the effects of increased temperature and reduced time on solvent evaporation?

A I have not.

Q You have not?

A I have not.

Q Are you aware that when you heat something up -- materials of this kind -- very rapidly, that have solvent in them, there's often an impervious film that forms on the outer surface?

A I can't say I'm aware of that.

Q And locks in the solvent and the interstices of the material, and causes blistering?

A I looked for blistering and did not see blistering.

Q Are you aware of the phenomena? That's my question.

A Yes, I am aware of blistering due to volatile in -- I've done a lot work on polyurethanes, in which case I have seen blistering.

Q When your reduced the time from to 2 hours, and the temperature on a Centigrade scale, did you consider what effect that might have on the solvent evaporation and solvent removal effects?

A I have not considered it in detail.

remember that the Centigrade scale is really an artificial scale.

What we're really doing is we're going from degrees to degrees, if you'd like. So that's not

Q What is that -- are you talking about "absolute zero?"

A I'm talking about a temperature scale, yes. A chemical temperature scale.

Q Do you know the effects upon curing within a material -- within a material that has polymer chains with hydroxyl functional groups.

* * *

Q Do you know the effects of accelerated times and accelerated temperatures that they will have when you heat a polymeric material that has hydroxyl chains on the

polymer chains -- hydroxyl functional groups on the polymer chains in conjunction with a cross linking agent?

A Now you're getting into an area where I do have some experience. I've done a lot of accelerated aging tests on solid propellants, and they do have those type of chains.

But I have looked at the physics of it, not the chemistry. And we have found in there that we can, indeed, devise accelerated tests.

* * *

Q Do you agree that the effects of changing the time of heating by a factor of 100, and changing the temperature by that that will have different effects on different types of chemicals?

A Oh, yes.

Q And so you couldn't predict -- certainly, you couldn't predict what effect that might have on the kinds of chemicals that are used in the Seibu binder material, is that correct?

A That's right.

Q So you don't know what effect your accelerated times and temperatures in the razor blade test that you've run had on the chemical reactions within the Seibu material, is that correct?

A That is correct. I do not know the chemistry of it.

Q And you do not know how it effected curing, is that correct?

A I do know how it effects curing.

Q In this particular case, in this --

A I have not measured solubility on this particular product.

* * *

Q In this formulation -- in the Seibu binder material formulation that you were working on -- that you were experimenting with -- you don't know how that accelerated time and temperature effected the chemical reactions,

including curing in the material, is that correct?

A I don't know unless I believe the interrogatories that were provided to me by Seibu.

Q What interrogatory are you referring to?

A The ones in which they tell me how to make it; and I presume that they told me right. And so this is the same product that I studied in Japan in the actual sheeting.

And there I do have an understanding of what -- of what goes on with the --

Q Would you please point to the interrogatory answer that you're referring to -- or answers -- that tell you that there is no significant change in the curing operation effected by changing the time by a factor of 100, and changing the temperature by a factor of degrees Centigrade?

A That's not what I said.

Q Well, what are you telling me?

* * *

A I am saying that I investigated the Seibu sheeting which this interrogatory here, which you marked RX-45(c), tells me on page 3, item 3 here, how they make binder one.

I did my best to follow that recipe to make binder one. In Japan, and subsequent to returning from Japan, I ran room temperature degrees C temperature and 65 degrees C temperature test, and found that the product, as measures both by its decrease in solubility and its increase in strength, that the cure could be accelerated.

And that's what we tried to do in this other test because of the time constraints that we had on use by the time we reached the product -- or received the products.

Q But you don't have one morsel of information, do you, as to how that curing effects the bond strength when you accelerate the cure that way?

A I have a lot of information. There it is.

* * *

THE WITNESS: CX-183, Your Honor.

(DeVries Tr. at 1100 to 1110).

621. DeVries testified:

JUDGE LUCKERN: But as I understand your testimony, and correct me --

THE WITNESS: Yes.

JUDGE LUCKERN: -- that the last clause of that claim [claim 1] could still be satisfied to you only by a screening test, which is the razor blade test.

THE WITNESS: No, the last one can be satisfied only by a more quantitative test like the peel test, or some such as that -- or possibly the shrinkage test, which is quasiquantitative, I guess.

JUDGE LUCKERN: Yes, I'm not trying to -- but still in Example 1 of the McGrath patent, all they did was -- I guess all they did was the razor blade test, and they still came to the conclusion that the uncured film could be easily removed, et cetera.

I mean, they didn't do anything else --

THE WITNESS: No.

JUDGE LUCKERN: -- and yet they came to the conclusion that -- I guess -- and maybe I'm wrong --that they got what was supposed to be in the Claim 1.

Am I -- you know --

THE WITNESS: Well, they got a part of it, Your Honor. But I would there bet that if 3M, or any other company now was going to take that product before they would invest in tooling up a whole plant to start producing sheeting from that, they would run some tests such as characterized by this last part.

JUDGE LUCKERN: Well, then how do I know -- and how do you know -- that Example 1 meets the Claim -- 1? Do you understand what I'm asking you?

THE WITNESS: Well, it meets the first part of it for sure.

JUDGE LUCKERN: Yes, but it doesn't meet the last part of it.

THE WITNESS: That's exactly what I'm saying. He wanted me to say a few minutes ago in order to satisfy this patent it had to satisfy both of those things; and I'm saying, no, I don't think that is necessarily true.

JUDGE LUCKERN: But is it your -- are you testifying that you don't know whether this product from Example 1 meets the last clause of this claim 1?

THE WITNESS: I have not run any tests on it Your Honor. You would have to ask --

JUDGE LUCKERN: Yes.

THE WITNESS: But it certainly meets the first of the two criteria that are on there.

* * *

Q I take it, Dr. DeVries, that your testimony here today and on Thursday on the issue of infringement was based upon the kind of analysis that you have made during the last few minutes.

A No, no, no. The testimony that I've given the last few days was based upon extensive experiments of a variety that I've tried in my weak way to describe as thoroughly as I can; and the results of which I've also tried to describe.

Q I have one last question -- I hope.

Is it correct, Dr. DeVries, that in all of the tests which you've just characterized as extensive, that you never once ran a razor blade test on the binder material of Seibu, which includes two binder layers?

A I did not.

Q And you had the materials to do so, is that correct?

A And I could have done it, yes.

* * *

BY MS. SUNDEEN:

Q Dr. DeVries, if I understand you testimony, when you answered one of Judge Luckern's questions with regard to what would be within the limitations in Claim 1, you said that you could tell what would be within those limitations

by either running a razor blade test, a peel test, or a heat shrink test, is that correct?

A I hope I didn't say "or." I think that you'd run some combination of them if you were actually trying to develop a product along the lines taught by -- CPX-1?

* * *

Q The '159 patent, you're referring to?

A Yes, I'm talking about the McGrath patent.

Q So you'd have to run more than one test -- or more than one of the three test I mentioned in my previous question?

(Pause)

A I think it would be wise to run more than one of the tests. But -- and certainly we ran more than one test on all the products we looked at. But as I -- I really don't know how to answer you question exactly.

Q Well, would it depend on which order you ran the test in, or whether you'd have to run more than one?

A I would think so. If you -- if you ran a test on a finished product, and it worked perfectly, and you were not concerned about other matters, why spend money to run other tests, I guess.

But that's not the normal sequence. First you run some screening tests, and then you go to the final product.

Q Right. So would you agree than that the best thing to do would be to run the razor blade test first to screen an appropriate binder material?

A It seems to me to be an excellent choice as a screening test, yes.

Q And then if you got positive results, meaning increased adhesion before -- or increased adhesion after curing compared to before, then you'd have to go on to the next test and make up some finished sheeting with the network of bonds, to determine the bond strength?

A I think that would be an appropriate -- the appropriate approach, yes.

Q And then after you ran those two tests -- at least those two tests, then you could make a determination as to whether those claim limitations have been satisfied?

A I would think so, yes.

(DeVries Tr. at 1141 to 1147).

622. From the peel tests that DeVries ran in Japan, DeVries had the feeling that respondents' material infringed at least claim 1 of the '159 patent. At the time DeVries had not run any razor blade test (DeVries Tr. at 1090, 1091).

623. DeVries departed from the electron beam radiation cure of the '159 patent in his tests because the different nature of the chemistry of respondents'binder did not suggest that an electron beam radiation cure should be used. DeVries wanted to pick a cure that was more nearly like respondents' cure. The reason that DeVries chose to heat the material for perhaps as little at two hours rather than for the curing step is because DeVries did not have the time to do it for DeVries did not feel it was necessary to cure it for and he also had "all this other evidence" (DeVries Tr. at 1115, 1116, 1117).

624. DeVries did accelerated curing tests in Japan (DeVries Tr. at 1124, 1125, 1126).

625. The solvent is probably the most volatile thing that is in the material which underwent the vacuum treatment and hence DeVries thinks that the preponderance of the evidence would suggest that it would be the solvent that came out in the vacuum treatment. Thus when DeVries placed the material in a room the solvent evaporated and other things did not. Any water would evaporate. When isocyanante combines with moisture carbon dioxide is given

off. There could be some carbon dixoide in the material. DeVries testifies that a more appropriate word would be the removal of volatiles from the material when placed in the vacuum oven (DeVries Tr. at 1043, 1044, 1045).

626. The razor blade test in the '159 patent is a screening test to decide on likely candidates for the binding material in the reflective sheeting. DeVries refers to the wording of claim 1 of the '159 patent: "characterized in that the binder material is selected from materials that show increased adhesion to said . . . cover sheet . . . when a solid layer of the material that has been previously laminated to said sheet is cured" (DeVries Tr. at 1067).

627. As to the razor blade test described in the '159 patent, col. 7, lines 5-8 states that "A 0.6 millimeter thick film was prepared by knife coating the radiation curable composition described above onto a silicone treated paper and then oven drying the coating." According to DeVries here one takes the material and using the knife edge form a film out of it. When DeVries ran his tests he took and mixed materials according to the description had in respondents' answers to the interrogatories and then knife coated it onto release paper and allowed it to dry. It was dried in the room underneath an overhead hood to pull the fumes away. Then pieces were taken out and hot-pressed bonded to polymethyl methacrylate sheeting or to respondents' cover sheet that was bonded to aluminum plates. The '159 patent at col. 7, line 8 states that two sections were cut. According to DeVries this was done so that the inventor could run a cured and an uncured on separate sheets of films. When DeVries did the tests he ran both on the same film. DeVries sees no significant difference between the two procedures. With reference to the

patent recitation that two sections were cut from this film and laminated (col. 7, lines 8-12), this is a hot-press bonding operation. The laminated pressure in DeVries tests was more like 270 psi and his platen press was 200 degrees F. As to the '159 patent recitation that one of the samples was then irradiated . . . (col. 7, lines 14-16), the inventor is describing his electron beam curing. DeVries used respondents' product which is not electron-beam cured but rather cured with time and temperature. DeVries put the sample in a 60 degree oven. Thus DeVries cured the material in an accelerated way referring to time and temperature over what respondents' material was cured. DeVries testified that earlier tests had shown that if one increased the temperature there was obtained accelerated curing as manifested by an increase in the bond strength and accelerated solubility. Thus DeVries was convinced of the interchangeability of conditions. According to DeVries the '159 patent recitation that the uncured film could be easily removed but the irradiated film was very tightly bound and could not be cleanly separated from the polymethylmethacrylate sheet described the razor blade test (DeVries Tr. at 1079, 1080, 1081, 1093, 1094, 1095).

628. In the tests run by DeVries, DeVries testified that "[w]e made every effort to be as careful as we could, and not to sacrifice. . . accuracy and care" (DeVries Tr. at 1081).

629. DeVries has had quite extensive experience in extracting solvents and other volatiles from materials. DeVries is convinced that the primary volatile in his vacuum test was the solvent (DeVries Tr. at 1086).

630. Grunzinger testified:

> From a technical standpoint -- I'm only asking you from a technical standpoint, are you familiar with Claim 1 of the McGrath patent?

THE WITNESS: Yes, I am.

JUDGE LUCKERN: Is it your testimony, based on your qualifications, this razor blade test, and also your study of the McGrath patent that from a technical standpoint only that the language in Claim 1 can be shown to have been met by only the razor blade test?

Do you understand my question, Dr. Grunzinger?

THE WITNESS: I'm not sure I totally understand it. I think I get your --

JUDGE LUCKERN: Well, I don't want -- if you don't understand it, either you can answer the way you understand it, or if you don't understand it then we just go on.

THE WITNESS: Well, let me offer this in way of explanation how I understand your question.

It depends on where a person is starting from as to whether -- how I would answer your question. If a person is starting with no prior knowledge of materials -- in other words he'd say, "I'd like to build an encapsulated lens sheeting. And I'd like to do it according to this patent."

Then the clause in there characterizing the binder material is selected from materials that show increased adhesion to at least one cover sheet and base sheet with a solid layer of material that has been previously laminated; that said sheet is cured.

And I think that is the test that you use to select possible candidates to build this construction. But then that doesn't really describe the entire procedure. You have to go on further because there could be materials that would meet this criteria but yet would not be able to be thermoformed to give a network of intersecting bonds that would have increased bond strength to the cover film and base sheet.

Now I look at the phrase "increased bond strength to the cover film and base sheet" meaning that the product in an uncured state, or the product in the cured state would have to have increased bond strength compared to that in the uncured state, or the product in the cured state would have to have increased bond strength compared to that in the uncured state.

And in this case we're comparing the samples being -- how does he put it? A network of narrow intersecting bonds extending between the cover sheet and the base sheet.

So that's the sample that I would test if I had an encapsulated lens sheeting to see if the language of the claim is met.

If I had binder material -- if I was looking for binder materials, I have to go back into the other clause to select the binder material; and then I have to do further work to see if in fact they would form a self supporting network of narrow intersecting bonds between the cover sheet and the base sheet material -- if that's what you had in mind.

JUDGE LUCKERN: Would that be the answer, then, to the question I had?

THE WITNESS: Yes, that's what I thought you were asking.

JUDGE LUCKERN: And where does the razor blade test come into play, if it does at all?

THE WITNESS: The razor blade tests would come into play particularly when you were selecting binder materials. Now it seems to me that if you have an encapsulated lens structure, where you have this network of narrow intersecting bonds, and that if you tested it before it was cured, and you got a value; and you tested it after it was cured and you got a higher value, it would seem logical that you'd already met the criteria of the first -- the selection process.

And how are you testing it there?

THE WITNESS: By a 90 degree peel test or a bond strength test on the the encapsulated lens structure.

(Grunzinger Tr. at 1974 to 1977).

631. Grunzinger testified that RPX-49 is a videotape of razor blade tests conducted by him using the identical materials and formulation of the bead binder layer and curing conditions with the electron beam of the commercial version of the 3M encapsulated retroreflective sheeting produced by the '159 patent; that the analysis of the Seibu "Ultralite" sheeting in which

Grunzinger participated prior to the filing of the complaint in this investigation included analysis of the commercial "Ultralite" sheeting for its chemical and physical properties and simulation of the compositions based upon the results of the analysis which analysis included peel tests of the simulated Seibu product, both before and after curing. Those tests on the simulated Seibu product were said by Grunzinger to show that the force to remove the cover sheet from the binder layer was greater after curing than before curing. Grunzinger testified that the increased force is the result of the curing or crosslinking, and not the result of solvent evaporation which conclusion was said to be supported by Grunzinger's work referenced in CX-199. In CX-199 Grunzinger prepared encapsulated lens sheeting constructions which contained an acrylic polyol with an isocyante crosslinker referenced in attached VI of CX 199 as the IC acrylic polyol. The IC polyol was comprised of 38.9 parts methyl methacrylate 52.3 parts ethyl acrylate and 8.8 parts hydroxy ethyl acrylate. The isocyanate crosslinker was Desmodur N3390 used in a weight amount to give an isocyanate/hydroxyl equivalent ratio of 0.147 (2.34 parts Desmodur 3390 per 100 parts solid acrylic polyol). The tests depicted on page 3 of CX-199, according to Grunzinger, show that at comparable solvent levels binders without an isocyante crosslinker remained constant in bond strength or diminished to a small extent; and that the samples with the crosslinker present containing greater than 2 percent solvent approximately doubled in bond strength (Grunzinger CX-198 at 11, 12).

632. RPX-49 showes two test samples. In the first sample shown, identified as 1, a razor blade is used at the edge corner and the binder is more easily removed when compared with the removability of the binder of the second sample shown, identified as 2 (RPX-49).

633. A March 13, 1986 Grunzinger report referred to the small sample of respondents' encapsulated lens retroreflective sheeting received in May 1983 and larger quantities becoming available in early 1985. The conclusions drawn from the analysis of the larger quantities was that respondents' bead binder layer is a crosslinked acrylic polymer which uses hexamethylene diisocyanate or a derivative of hexamethylene diisocyanate in the crosslinking process (CX-199 at 1).

634. In Grunzinger's tests on replicated Seibu sheeting from an analysis of the larger quantities of respondents' sheeting as reported in the March 13, 1986 report, Grunzinger measured the difference in seal strength (force to remove the cover film from the network of seal lines) from a time after sealing to a time seven days later. He prepared and tested two different sets of samples: one set in which the bead binder contained both an acrylic terpolymer and isocyanate cross-linking agent, and another set in which the bead binder included just the acrylic terpolymer and omitted the isocyanate cross-linking agent. The tests showed that the samples with isocyanate cross-linking agent increased in seal strength over the seven days, and that the samples without cross-linking agent showed no increase in seal strength over the seven days. Solubility tests were also conducted on the bead binder seven days after preparation which showed that the bead binder with isocyanate cross-linking agent had undergone substantial cross-linking over the seven days, whereas the bead binder without isocyanate cross-linking agent had a high soluble content after seven days. The conclusion drawn from the test was that a bead binder system comprised of a hydroxy functional acrylic polymer and a isocyanate cross-linker can cure in situ after thermal

sealing to a non-oriented polymethylmethacrylate cover film to give improved seal strength as described in claim 1 of the '159 patent (CX-199 at 2, 3, 4, Table I).

(There is no FF 635, 636 and 637).

638. A Grunzinger technical report on analysis of a Beiersdorf encapsulated lens retroreflective sheeting sample dated January 10, 1984 stated in part:

> In late April, 1983, Beiersdorf provided the TCM laboratory, through Mr. Landen, with a sample of encapsulated lens retroreflective sheeting. The sample represented a product which Beiersdorf claimed would be potentially commericialized and which they desired a 3M position on possible infringement to the claims and teachings of McGrath (U.S. 4,025,159).
>
> The same was subjected to a numer of analytical and physical property tests with the single objective of determining if it did infringe McGrath, that is, practices the use of binder (cushion coat) materials which:
>
> a) were thermoformable
>
> b) show increased adhesion and bond strength to cover film and/or base sheet and
>
> c) are cured in situ after thermoforming.

The body of evidence developed from this analysis, the details of which are included in the actual report, demonstrates the sample does practice the teachings of McGrath. The major evidence for this conclusion includes:

- Photomicroscopic examination
- Infrared analysis of each layer
- Physical testing (seal strength), especially at higher temperature
- Solubility of component layers
- Thermal Mechanical Analysis (TMA)
- Thermal shrink resistance
- Hydrolysis and subsequent gas chromatographic analysis of binder material
- Dynamic Mechaical Analysis and Mechnical Thermal Analysis (DMA, DMTA)

The entire body of results consistently shows the sample was made by the method taught by McGrath.

Because the binder material is a cured, cross-linked material, it is difficult to reconstruct exactly the actual composition of the uncured binder coating. Attmepts to simulate the construction show use of McGrath's teaching, but do not exactly duplicate the composite physical properties of the submitted sample. An exact simulation could be provided either through (1) quantititative analysis of a larger sample followed by material/composition designs which fit the analytical results, or (2) analysis and use of the actual input materials used in preparing the retroreflective sheeting sample.

(RX-44 at 1)

639. A Grunzinger report dated August 4, 1983 read in part:

> A crosslinking acrylic-urethane cushion coat composition was prepared by mixing an acrylic polyol with an aliphatic isocyanate. Acrylic polymer solution without the isocyanate crosslinker was used as a control. The acrylic polyol solution was comprised of a terpolymer with a 60/30/10, weight ratio of ethyl acrylate, methyl methacrylate, and hydroxyethyl-methacrylate at 32% solids in butyl acetate with an equivalent weight range of 4300-5000. The isocyanate crosslinker used was Desmodur N-100, a biuret of hexamethylene diisocyanate with an equivalent weight of 190. The crosslinking acrylic-urethane cushion coat composition contained an isocyanate/hydroxyl equivalent ratio of 0.67:1. The test specimens were prepared as described in US. 4,025,159 Column 7 lines 3-13 [the patent in issue]. Oven drying consisted of 15 minutes @ 150°F and provided sufficient solvent removal, so that blistering of the cushion coat fil did not occur in the heated lamination step. Adhesion of the acrylic cushion coat to a polymethytmethacrylate surface was determined on 1 inch strips using a 90° peel test. the laminated samples wer tested immediately after cooling and also after coditioning at 75° or 150°F for various time periods.

(RX-41).

640. With respect to the cushion coat composition referred to in the August 4, 1983 report, Grunizinger testified:

> A It's a composition which I thought fit the category that we had had from the analysis of the sample of Seibu ultralite which was obtained through Beiersdorf.

Q Somebody handed to you a report of some kind on what the composition of the binder material was in Seibu's, or Beirsdorf sheeting in the summer of 1983, is that correct?

A That is correct.

Q And you tried to duplicate that binder material, is that correct?

A From the information that was on that report, yes.

* * *

Q Is it correct that you prepared a number of binder materials in an effort to simulate Seibu's binder material between the years, or beginning in the summer of 1973, and cotinuing for some period of time therafter -- excuse me, 1983?

A I don't believe I began to prepare any binder materials in the sense of preparing the polymers in those binder materials until some time after that.

Q Well --

A Prior to -- beginning in the summer of '83 we were using polymeric materials which we had on hand, which generally matched the description that we had from the analysis.

Q Is that the material that is described in RX-41 that you referred to?

A Yes, that polymer is one that we had available from another research project.

Q You also refer in RX-41 to desmodur, D-E-S-M-O-D-U-R. Is it correct that that is an isocyanate crosslinking agent?

A Yes, it is.

Q How long a period of time did you continue to prepare binder materials in an attempt to replicate the Seibu product -- binder material?

A Of what period of time are you speaking? Can we put some dates on that?

Q Yes, between the summer of 1983 and July of 1987.

A I don't recall exactly when we -- I'll put approximate dates on this. I think we must have started some time in 1984, and probably had continued on making samples of various types through the first half of 1985.

Q How many samples would you say you prepared?

A Are we talking polymers or are we tal ng binder materials?

Q Binder materials.

(Pause)

A In terms of types, probably six to twelve.

Q How many samples?

A I couldn't say how many samples.

Q Hundreds?

A Probably in that range.

Q So somewhere between six and twelve different types of binder materials, is that correct?

A That's correct.

Q And hundreds of samples. Now did you test -- how many samples would you say you tested to determine whether or not there was increased adhesion, as you understood the term to be used in Claim 1 at the time?

A Well, it would be the same amount. I mean, we tested all of the samples, so they all had to be included in that.

Q And some of them showed no increased adhesion, is that correct?

A Some of them did. Some of them did because they didn't have any crosslinking agent in them.

Q And others that did have crosslinking agent also showed no increased ahesion, is that correct?

A There were some samples that behaved that way, yes.

Q With crosslinking agent?

A With the crosslinking agent.

(Grunzinger Tr. at 1940, 1951, 1952, 1953).

641. On the razor blade test, Grunzinger testified:

Q You had never run a razor blade test of any kind, is that correct?

A No, I had run razor blade tests in other products, prior to that.

Q What kind of tests were those?

A That would have been a V cut, or an X cut test.

Q In products prior to 1983?

A That's correct.

Q In your view, does the -- did I understand your earlier testimony to be that if you make a V cut and test it that way, that that's not in accordance with what is set forth in Column 7 of the patent?

A I think it's one interpretation that you could make for that patent in that column. It wasn't the tests as Dr. McGrath had envisioned it.

Q How do you know that?

A I had talked with him, on one of his visits back to the United States.

Q When was that?

A Oh, hard to say --'83 -- not '83, I'm sorry, '85 or thereafter.

Q And you discussed the razor blade test with him at that time?

A Yes, I asked him what he meant.

Q What did he tell you?

A He told me -- he described to me how he ran the test.

Q How he ran it when? In connection with Example 1?

A In connection with Example 1 --

Q And what did he tell you?

A He told me that the binder layer was laminated down to the cast polymethyl methacrylate sheet; and that he had approached the sample with a razor blade from the edge in a -- I suppose one could say a horizontal fashion, as opposed to a vertical fashion.

In other words, he was not using an X cut.

Q Is that what you tried to duplicate on the the film RPX-49?

A Yes.

Q Prior to talking to Dr. McGrath on that occasion in 1985, or whenever it was, did you envision that kind of a test when you read the McGrath Column 7?

A No, I didn't envision it that way because I was already prejudiced, if the work is correct, by my prior testing with the razor blade.

I had used a razor blade to test the level of adhesion between two different layers; and we had always done it with an X cut, or a V cut.

(Grunzinger Tr. at 1958, 1959, 1960).

X. Importation or Sale

642. Respondent Seibulite International Inc. first imported "Ultralite" brand high intensity grade retroreflective sheeting from Japan into the U.S. in June, 1985, with the first domestic sale made in July of that year (CX-124 at 7, 10).

643. Respondent Seibu Polymer Industry Co., Ltd. is the manufacturer of "Ultralite" sheeting. Seibulite International Inc. is the importer and U.S. distributor of "Ultralite" sheetinng from July 1, 1986 to the present; it has principal offices in Tokyo and a branch office in Los Angeles, California

which is also known as Seibu USA. Previously Seibu Polymer Chemical Co., Ltd. was the U.S. importer and distributor of "Ultralite" sheeting. Seibu Polymer Chemical Co., Ltd. is whole owner of manufacturer Seibu Polymer Chemical Industry Co., Ltd., and part owner of Seibulite International Inc. (CX-121, response to interrog. no. 23, 40).

644. Respondents' national sales manager, knowledgeable concerning the extent of its U.S. sales, gave creditable testimony that respondent Seibu's annual domestic sales of imported "Ultralite" brand sheeting are as follows:

Such U.S. sales levels are in substantial accord with other information of record, CX-126 at 1; CX-124 at 19, response to interrog. no. 10). (Chapman RX-38 at 2; Tr. at 899-901,906-908).

645. Following are Seibu's U.S. sales volume of "Ultralite" sheeting, as indicated by dollar volume information and pertinent average price information for the time periods:

Year	Square Footage	Volume % Increase

(CX-126 at 1; RX-38 at 2).

646. Respondent Seibu's Polymer Chemical Co, Ltd's annual exports of "Ultralite" sheeting as taken at the time of embarkation from Japan, to its U.S. office are as follows in volume:

Year	Thousand Sqaure Meters	Sq.Ft.

(first 6 months)

The above figures do not take into account shipping times from Japan to the U.S. (CX-121 at 12, response to interrog. no. 7(d); Tr. at 899-900; 906-907).

647. The volume of imports of "Ultralite" sheeting by Seibulite International Inc. were as follows for 1985 and 1986:

(CX-123, confidential attachment to complaint and notice of investigation).

XI. Domestic Industry

648. Complainant manufactures high intensity retroreflective sheeting through its Traffic Control Materials Division, which has its principal office in St. Paul, Minnesota. The Traffic Control Materials Division is part of the Life Sciences sector of complainant. Retrofeflective sheeting is often used to form the legend or lettering and background design of traffic signs mounted alongside highways, and the sheeting may be attached to a sign black by methods such as pressure sensitive adhesive or heat activated adhesive (Richelson CX-17 at 1-2).

649. Complainant's Erickson, technical director of its Traffic Control Materials Division, performed razor blade tests and heat shrink tests and testified concerning peel strength tests done on complainant's binder material and high intensity sheeting. One set of razor blade tests was actually on 3M sheeting before curing and then after curing. The other set of tests was on a smooth or solid layer of 3M binder material cast onto complainant's cover film which is polymethylmethacrylate. These razor blade tests showed increased adhesion, resistance to delamination, after electron

beam curing of the material as compared to that before curing. In 1983 he ran heat shrink tests on complainant's high intensity sheeting which showed the same results of increased bond strength as described in example 12 of the McGrath patent, which was that the uncured area had about 15-18% of the encapsulated areas unaffected, while the cured material had 85-90% of the areas unaffected. Erickson also arranged for peel strength tests on complainant's sheeting which showed approximately a two-fold increase in adhesion after curing as compared to before curing. The binder material used in complainant's high intensity grade sheeting is essentially that listed in example

650. DeVries conducted a minimum of 10 peel and solubility tests on samples of complainant's high intensity sheeting he obtained in January, 1988 from the complainant's Brownwood, Texas plant. He has not conducted razor blade tests on complainant's material, but has seen that test run on a videotape. DeVries observed only the thermoforming part of the complainant's production operation, and the subsequent electron beam curing there. He obtained samples of the sheeting both before and after electron beam curing, and observed an operator at the plant cut an oval section out of the sheeting, and a comparable section cut after the sheeting had gone through the electron beam curing device. CPX-81-84 are four samples that DeVries tested from the material he obtained from the 3M Brownwwood plant. DeVries' solubility tests and photomicrographs of these samples confirmed that before cure the solid

binder material was uncured and completely soluble, while after cure the cover sheet was soluble but the binder material was relatively insoluble. The results of DeVries' peel strength tests showed an increase in bond strength, that the binder material "tenaciously held" the cover sheet after cure as compared to before cure with an increased bond strength, as required by the second "characterized by..." clause of claim 1 of the '159 patent. As testified by DeVries, from the mechanical and physical tests he conducted on complainant's sheeting material was essentially identical to that of respondents (Tr. at 636-50, 655-57, 665-6; CPX-81-84).

651. The binder material in complainant's high intensity sheeting is cured in situ after the binder material has been thermoformed into sealing contact with the cover sheet of polymethylmethacrylate. The binder material used in complainant's sheeting is an acrylic based ingredient composed of an acrylate polymer and an acrylate monomer, which is a reactive monomer that is polymerized during the electron beam curing operation (Erickson, CX-79 at 8; Tr. at 696-7,823; DeVries Tr. at 640-641).

652. Encapsulated lens high intensity retroreflective sheeting sold by complainant include the following model series: model number series 2870 (with heat activated adhesive for adhering to a sign blank), 3870 (pressure sensitive adhesive), 5870 (low temperature pressure sensitive adhesive for hand application), 6800 (conformable pressure sensitive adhesive for adhesion to porous surfaces), and 9800 (6 mil aluminum backed sheetings for application over old sign surfaces), as well as 2820 (work zone solid colored sheeting), 3820 (striped barricade sheeting) series of 3M product. These model sheetings have a structure as shown in Figure 3 of the McGrath patent, comprising a base

sheet having a layer of glass microspheres disposed over one surface of the base sheet and coated on their back surface with a layer of vapor-coated metal to make the microspheres reflective elements. The cover sheet is in spaced relation to the retroreflective element microspheres. These products of complainant also contain a network of narrow intersecting bonds 13 extending between the cover sheet and the base sheet so as to adhere the two sheets together and form a plurality of cells in which the glass microspheres are hermetically sealed. While the McGrath patent shows a bond network arrayed in a rectangular gridwork configuration, complainant's high intensity sheeting contains a network of narrow intersecting bonds arrayed in a hexagonal cell or "honeycomb" configuration. This sheeting of complainant is manufactured in general accordance with the procedure described in example 1 of the McGrath '159 patent (with the exception of

first theremofroming binder material from the base sheet into contact with the cover sheet to form the narrow intersecting bonds, and then curing the binder material in situ after thermoforming by exposure to electron beam radiation. The cover sheet used in complainant's high intensity sheeting is transparent (Erickson CX-79 at 7-8; Erickson Tr. at 690, 699-700, 821-824; DeVries Tr. at 638-645, 664-666; CPX-80-84,; CX-20 at 17; Richelson CX-17 at 7-8; CX-24-28).

653. Complainant began the commercial manufacture and sale of the '159 McGrath type of encapsulated lens high intensity sheeting with general market release in 1980. Replacement costs for encapsulated lens high intensity sheeting made according to the prior art McKenzie '178 patent were millions of dollars resulting from cover sheet delamination and hundreds of

customer complaints, while delamination of McGrath type sheeting has been reduced to complaints (Richelson CX-17 at 6; CX-22).

654. Complainant alone manufactures the complete high intensity retroreflective sheeting in its Traffic Control Materials Division in Brownwood, Texas. Materials components used in the manufacture of high intensity are also manufactured in the U.S. as follows: the cover film and binder materials are manufactured by complainant's plant in its Specialty Film Division in Cottage Grove, Minnesota; adhesive components are made by the complainant's Specialty Chemical Division in Cordova, Illinois; other film components are made by the 3M Specialty Chemical Division plant in Decatur, Alabama. The micro sized glass beads used in the sheeting are manufactured by complainant in Brownwood, Texas. Additionally, complainant obtains certain component materials such as various resins and pigments from U.S. suppliers (CX-17 at 9-12; CX-34).

655. Following are complainant's annual sales volume for the high intensity grade retroreflective sheeting at issue, in both rolls and sheets and fabricated items such as signs and letters:

656. Following is complainant's annual (U.S.) production volume for high intensity grade retroreflective sheeting:

(CX-44).

XII. Efficient and Economic Operation

657. Related to high intensity retroreflective sheeting sales 3M employs in the U.S. about 75 field salesmen, 14 sales and marketing management personnel, about 21 administrative workers, and 5-6 technical service workers. These employees spend over half their time on sales and service related to sign materials, which includes high intensity sheeting. Complainant has three distinct sales forces involved in the sale of high intensity sheeting, divided by sales to state, local, and federal agencies (Erickson Tr. at 812-813; CX-17 at 9).

658. Complainant's Brownwood, Texas plant for manufacture of high intensity sheeting was built in 1965 and expanded subsequently to its present 600,000 square foot space. Equipment at Brownwood for manufacture of high intensity sheeting includes vapor coaters, rewinders, a sealer for thermoforming and subsequent curing, laminating apparatus, makers for preparation of the binder material, adhesive layer, and glass beads on their temporary carrier. The vapor coaters apply a reflective aluminum coating on the glass beads by vapor deposition. The makers are equipment used for several functions: through them a web is made as a temporary carrier for the glass beads; for preparation of the binder material layer (item 15 of Fig. 2

in the '159 patent); and for preparation of a layer of adhesive for attachment of the sheeting to a sign blank. The sealers perform the thermoforming operation as well as the curing operation thereafter. Glass bead manufacturing equipment is also used at the 3M Brownwood facility (Richelson CX-17 at 10).

659. In the manufacture of complainant's high intensity retroreflective sheeting at its Brownwood plant and on the basis of man-hours used, there is the equivalent of about 105 hourly full time employees and 25 salaried full time employees in the Traffic Control Materials Division. Production labor in other divisions of complainant dedicated to high intensity sheeting components is estimated to be the equivalent of about 22 employees. The total then including others outside Brownwood involved in the manufacturing operation for high intensity sheeting is the equivalent of approximately 149 total workers at complainant (Richelson CX-17 at 10-11).

660. The Brownwood plant of complainant's Traffic Control Materials Division has a current capitalization value of space and equipment of many millions of dollars, with substantial expenditures of many $ millions made from 1973 to 1987 on capital expenditures for plant and equipment improvements made, and a budget for millions more in equipment improvement in 1986-1988. Such investments have enabled increased production, improved quality, and savings in production costs (Richelson CX-17 at 11-12; CX-32; CX-33).

661. The 10,000 square foot Cottage Grove, Minnesota plant of complainant is used about 50-60% of the time to make the top or cover film of polymethylmethacrylate for the high intensity sheeting. Total full time production labor dedicated to high intensity sheeting component manufacture at

3M's Cottage Grove, St. Paul, Cordova, Illinois, and Decatur, Alabama plants is the equivalent of 22 employees (Richelson CX-17 at 11).

662. An extensive benefits program is maintained for complainant's production employees, including medical and dental insurance plans, disability coverage, survivor benefit programs, life insurance, pension, scholarships, and savings investment plans (CX-30).

663. Complainant's Traffic Control Materials Division maintains a research laboratory in St. Paul, Minnesota employing about 150 technical employees, including 100 degreed persons, and engineers, scientists and technicians. The laboratory capitalization value is $3 million. In the Traffic Control Materials Division laboratory, 7-8 people work almost full time on production service for high intensity sheeting. Additionally, 7-8 people work about 90-95% of their time on improving the high intensity product, and about 4 workers devoted full time to basic research, particularly regarding durability. The Division also maintains weathering test desks for sign materials in the states of Texas, Louisiana, Mineesota, and elsewhere in the U.S. (Erickson CX-79 at 2; Erickson, Tr. at 814-816).

664. Substantial investment in research and development in high intensity retroreflective sheeting has been made by complainant since 1976. Such expenditures for 1976-1987 totalled approximately The technical work has been focused in four areas: technical service for customers; the solution of production problems and quality control in production and raw material sourcing; product improvement and enhancement; and basic research on the failure mechanisms affecting durability and weathering of components and layers in the sheeting. For evaluation of sheeting

complainant uses both accelerated weather testing in the laboratory and lengthy actual field testing which it finds necessary before market release of a product to assess actual performance of the product (Erickson CX-79 at 3; CX-80).

665. Sales of complainant's high intensity sheeting are promoted through advertising, trade shows, product literature, brochures, merchandising programs, personal sales efforts. Promotional and print ads under the slogan "The Brighter Way to Safer Roads" include: a pamphlet entitled "How to improve your motorists' vision at night"; a print ad entitled "Your third grader will be an adult before this 3M high intensity sign shows its age"; and a print ad entitled "The way some construction zones are marked really kills people." The print ads are placed in publications directed to traffic engineers and public works officials such as American City & County Municipal Index, Public Works Manual, American Transportation Builder Quarterly, Roads Monthly, Military Engineer, ITE Journal Monthly, Nation's Cities Weekly, Better Roads, etc. Complainant has principally developed the domestic and world market for high intensity sheeting (Richelson CX-17 at 13; CX-38-41; CX-42).

666. Complainant's sales of high intensity sheeting sold in the durable sign market are now backed by a ten year warranty. For purposes of maintaining consumer goodwill in the durability of the product complainant replaced at no cost to the customer high intensity sheeting made according to the McKenzie '178 patent which failed due to delamination though 3M had predicted longer use lifes for the product. Out-of-pocket costs for sign replacement exceeded not including the supply of square feet of replacement sheeting at no cost to the customer (Richelson CX-17 at 6).

667. Following are complainant's annual advertising and merchandising expenditures for high intensity retroreflective sheeting:

Substantial advertising and merchandising expenditures have been made by 3M to build and expand the market for high intensity retroreflective sheeting, as shown above (CX-37; Richelson CX-17 at 13.

668. Numerous modifications in the high intensity plant and manufacturing equipment have been made by complainant, including improvements in the coating apparatus, glass bead manufacture equipment, and measurement equipment, involving an investment of millions of dollars in such improvements. Numerous product improvements include an improved adhesive for the sheeting's adherence to a sign blank for use without expensive application equipment, a more flexible top film, a sheeting better able to hold up under work zone handling, sunlight proof durable inks for application to the cover film for color and graphic images, and improvements in the glass beads used as the retroreflective elements (Richelson CX-17 at 12; CX-31; CX-32; Erickson CX-79 at 3).

669. 3M has extensive quality assurance standards, tests and specifications for its production of high intensity retroreflective sheeting, including specifications for the raw materials used, quality test procedures for the raw materials used, product inspection testing of the components of the sheeting, in-process specifications and testing of the product, calibration procedures for ensuring test accuracy, and weathering tests and data on the sheeting (Gehring CX-86 at 1-4; CX-87-103).

670. Following is complainant's annual profit for total sales of high intensity product, and percentage of profits to sales revenue:

Following are complainant's annual profit and thousands of dollars operating income, and percentage of operating income to sales, for both cut and fabricated items made by 3M from high intensity sheeting, and for high intensity sheeting sales:

Complainant's sales of high intensity retroreflective sheeting have been consistently profitable, as shown above. Complainant's profit on high intensity sheeting sales increased approximately in 1987 over 1986. As testified by Richelsen, much of complainant's recent increase in profitability is due to productivity increases and investment, particularly in complainant's

coating equipment, to make the product less expensive (CX-43; Richelsen Tr. at 138-140).

671. Following are annual expenditures of complainant on high intensity retroreflective sheeting research and development since 1973:

XIII. Substantial Injury

Market Share

672. Following are approximate annual U.S. sales in thousands of dollar value of respondents' "Ultralite" sheeting as compared to complainant's high intensity sheeting sales:

Following are more representative (due to underselling) market shares in terms of volume sold of high intensity product, with unit sales of "Ultralight" sheeting in thousands of square feet, as compared to unit sales of 3M high intensity product:

(3M 1987 X 12/11) (Seibu 1987 dollar sales/ avg. price per sq. ft= sq. ft. sold) (complainant's 1987 high intensity sales are reported through November only, and are annualized as above). Significant sales volume of "Ultralite" did not commence until 1986 (CX-35; Chapman RX-38 at 2; CX-126 at 1; CX-121, response to interrog. no.26(a); CX-124 at 14).

674. Following are comparisons of sales of high intensity sheeting alone, wihout complainant's sales of cut and fabricated high intensity product

items from such sheeting which are currently in average price compared to complainant's sheeting, and which Seibu does not offer:

Due to underselling, area sold is more representative of relative market shares (CX-35; Chapman RX-38 at 2; CX-126 at 1; CX-121, response to interrog. no.26(a)).

675. Complainant and respondents are the only manufacturer-suppliers of high intensity retroreflective sheeting in the U.S. market (Richelson Tr. at 133; Voves at 872; Chapman CPX-58A at 68; Complaint, paragraph 27 at 11-12; admitted by Response to Complaint and Notice at 8).

Lost Sales

677. Complainant and respondents first entered formal head-to-head competitive government agency bidding procedures against each other in August, 1985 on a bid to the state of New Mexico. Respondent Seibulite won this contract award by underbidding complainant, $2.75 /sq. ft. as compared to $3.10 /sq. ft. (CX-104 at 2).

678. Evidence of specific lost sales submitted are sales lost by complainant directly to respondent Seibulite in direct bidding between the two on government agency contracts. Since these lost sales do not include sales where a private contractor purchases high intensity sheeting and then uses that sheeting in work the contractor has separately agreed to perform for the agency, and since Seibulite is primarily making sales of high intensity grade to such customers, the following direct government bids lost and approximate lost revenue do understate total lost sales.

Date	Customer	Volume Sq. Ft.	Seibu Price	3M Price	Lost Revenue
8/85	New Mexico	1,000	2.75	3.10	$3100
9/85	Texas	498	3.248	3.776	$1880
1/86	Texas	875	3.20	3.47	$3036
2/86	Arlington,Tx	12,750	2.79	2.93	$37,357
			2.90	3.27	
11/86	New Mexico	1,000	2.909	3.049	$3049
12/86	Wisconsin	70,000	2.90	3.049	$213,430
12/86	St. Clair, Co., Ill.	450	2.90	3.337	$1501
12/86	Omaha, Ne	4,012	2.854	3.049	$12,232
4/87	Arizona	11,000	2.90	3.11	$34,210
5/87	Arlington,Tx	300	unknown	3.388	$1016
6/87	" "	2,150	2.996	3.049	$6,555
7/87	Washington	10,000	2.93	3.049	$30,490
			3.11 sheets		
7/87	Missouri	7,200	3.009	3.049	$21,952
9/87	Arlington,Tx	1,875	2.996	3.049	$5,716
11/87	Colorado	4,500	2.90	2.93	$13,185
12/87	Arlington,Tx	4,875	3.00	3.11	$15,161

Total sales revenue lost by complainant from competitive bid awards to Seibulite from August, 1985 to December, 1987 is approximately $403,000, from 132,480 square total square feet of sheeting. Respondents' sales revenue for these awards was approximately $380 thousand overall, with $4300 in 1985, $257,036 in 1986, and $123,407 in 1987. Approximately 13% of respondents' total domestic sales revenue of $2.932 million is from the specified awards won from complainant above (CX-104 at 2; CX-105; FF 1).

679. With complainant's profit at of sales from 1985 through 1986, were complainant not to have the above specified lost sales revenue of approximately then complainant would have conservatively earned approximately an additional in profit (CX-43; CX-105).

680. Complainant from 1982 to date has not sold all of the high intensity sheeting it has manufactured annually. Its practice has been to maintain inventories at a 4-5 month level. Following is complainant's domestic inventory in dollar value for high intensity sheeting product:

681. Complainant has not manufactured high intensity sheeting to its maximum capacity. For 1983-1987 complainant's maximum production capacity has been square yards of high intensity sheeting as compared to about actually produced in 1987, based on addition of a

In 1985 and 1986 complainant manufactured square

Price Matching

682. In head-to head competition where complainant and respondent competite in sales to certain private contractor customers of durable high intensity sheeting, complainant has matched Seibu's contract price by giving a "customer match price credit", that is by lowering complainant's price virtually without exception. Complainant has lowered its price to meet Seibu competition on

(CX-17 at 16; CX-49).

683. With complainant's profit on domestic sales of sheeting at of sales from 1985 through 1987, were complainant not subject to price matching, the in lost sales revenue due to such matching would have resulted in in additional operating income to complainant (CX-43; CX-49).

684. Complainant has reduced its list price for temporary grade or work zone sheeting as a result of competition with respondents, by giving an approximately 5% price break for orders over 5,000 square feet and about 10% on orders over 10,000 square feet. As an example, complainant's price on the large orders is changed from a $3.26 per square foot list price, to $2.92 a square foot, and its average prices on larger quantity purchases under annual contracts for model series 3820 work zone sheeting has been reduced from over $3.00 to $2.78 a square foot (CX-17 at 16; CX-47; CX-48).

Market Competition

685. Above specified direct sales revenue lost by complainant due to competition from respondents involve operating income of approximately

in lost operating income or profit. This amount would have added approximately of actual complainant total annualized operating income for 1987 for high intensity product sales, and of high intensity sheeting sales (CX-43; FF 7, 11).

686. In the sale of "Ultralite" retroreflective sheeting Seibulite International Inc. competes directly with 3M high intensity sheeting (CX-111 at 4, admission of request no. 10; Chapman CPX-58 at 142).

687. The primary customers for retroreflective sheeting are government agencies at the state, local and federal level. The primary application is on highway and roadway signing in accordance with the various categories of signs delineated in the Manaual of Uniform Traffic Control Devices published by the Federal Highway Administration (Complaint paragraph 26, admitted by Response to Complaint and Notice at 8).

688. Signing categories are frequently broken into two general subcategories based on the expected performance life of the sign. The categories are (1) durable- typically associated with signs installed on a permanent basis (such as stop and yield signs, street name signs, and highway and freeway directional signs) and (2) temporary- typically signs or warning devices used in temporary applications associated with construction work zones (such as striped barricade sheeting). (Complaint, paragraph 27 at 11-12, paragraph 56 at 22; admitted by Response at 8 & 13; Richelson CX-17 at 8; CX-21).

689. An important difference in the requirements for sign sheeting materials used in these two applications is in the durability of these

materials as measured in retained brightness over time. Temporary or "work zone grade" sheeting is intended to be used on a more temporary basis, usually for highway construction zones, and thus has a significantly shorter guaranteed life span than does the "durable" high intensity reflective sheeting which typically is guaranteed for a minimum of ten years. Within two major market segments- durable and temporary sheeting - there are a number of retroreflective products a customer can choose based upon his particular requirements. These products are typically differentiated in specifications such as standardized by the Federal Highway Administration, FP-85 (Exhibit 17 to the complaint), according to brightness levels they provide, although there are numerous other attributes that can also be the basis for selection, i.e., type of adhesive used, flexibility, etc. The following Table I shows the variety of material choices abilable in the domestic market and the recognized sources of each.

Table I

PRODUCT	BRIGHTNESS	VENDOR	APPLICATION	
			Durable	Temporary
Engineer Grade	70 cpl	3M	x	x
		Avery	x	x
		Seibu	x	x
		American Decal	x	
Super Engineer Grade	180 cpl	x	x	
High Intensity Grade	300 cpl	3M	x	x
		Seibu	x	x

(Complaint, paragraph 27 at 11-12, paragraph 56 at 22; admitted by Response to Complaint and Notice at 8 & 13).

690. While government agencies are the primary specifiers of retroreflective sheeting, the product reaches its final application by different channels. Many government agencies purchase sheeting direct and fabricate their own signs; in other instances the agencies purchase finished signs from independent manufacturers. A third channel, frequently associated

with temporary or work zone signing, is to have the agency specify it, but rely on contractors and subcontractors to obtain the material from independent sign and barricade manufacturers who may sell or rent the actual signs and barricades to the private contractor for use on construction projects. (Complaint, paragraph 29; Response admitting allegations at 13; CX-17 at 8-9).

691. Complainant currently offers durable type high intensity sheeting in 50 yard standard sized rolls in colors of silver (white), yellow, red, blue, green, and brown with either heat activated or pressure sensitive adhesive, among others, for application to a sign blank; sheeting is offerred in sizes of 3/4, 1, 1 1/4, 2, 3, 6, 8, 9, 12, 18, 24, 30, 36, 42 and 48 inch widths. 3M also offers temporary type high intensity work zone application sheeting in white, yellow, and orange colors with either heat activated or super high tack pressure sensitive adhesive; work zone sheeting is offerred in widths of 4, 6, 18, 24, 30, 36 and 48 inch widths. 3M temporary type striped barricade sheeting is offered with 4" or 6" diagonal stripes, in sizes of 6, 8, 12, 24 and 36 inch widths. Respondents similarly currently offers in the U.S. durable type high intensity sheeting in 50 yard standard sized rolls in colors of white, yellow, red, blue and green, but also offers orange colored sheeting rather than complainant's brown. Respondents' high intensity sheeting similarly is offerred with either heat activated or pressure sensitive adhesive, and is offerred in identical size widths of 1, 2, 3, 6, 8, 12, 24, 30, 36 and 48 inch widths; respondents also offer a 12.75" width not identically offerred by complainant. "Ultralite" sheeting also similarly includes temporary type orange and white work zone barrel tape in 4 and 6" widths and with high tack pressure sensitive adhesive. Respondents' temporary type prestriped barricade sheeting similarly contains 4 or 6" wide stripes

running diagonally across the sheeting, and is similarly offerred in 8, and 12 inch widths, as well as 7 and 7.75 widths not identically offerred by 3M. (CX-48; CX-131).

692. Respondents sell in the U.S. durable type "Ultralite" high intensity product in sheeting form in model series 700 (with heat activated adhesive for application to a sign blank), and model series 800 (with pressure sensitive adhesive), as well as temporary type "Ultralite" sheetings with product designations 504, 505, 507, 512,517, 818, 902, and 917. (CX-124 at 8-9; CX-121, response to interrog. no. 1).

693. In addition to sales of rolls and sheets of high intensity grade sheeting, complainant also sell items cut and fabricated from such sheeting, including signs, letters, etc, not offerred by respondents. Complainant's sales of fabricated items under their commodity class designation number 6124 have in dollar value and area sold since 1979, with annualized square yardage sold in 1987 than that sold by complainant in 1979, while complainant's sales of rolls and sheets of high intensity grade have consistently increased from 1983 through 1987, increasing about in that period. Fabricated items sold by complainant's have consistently been sold at a substantial price premium over the rolls and sheets of high intensity product, over the sheeting itself. While complainant's profitability for fabricated items as a percentage of sales from 1984 to 1987, profitability on high intensity sheeting itself has increased from 1984 through 1987, with 1987 operating income or profits at of sales (CX-35; CX-17 at 13; CX-43).

694. Sales directly to state, local and federal government agencies are made through a bidding process in which a request for bids will be issued

and interested bidders must bid to the specification established by the agency, or take exception to certain aspects of the specification in the hope that the exception will be accepted. If the qualifying bids are close in price, within a couple of percent or less, then the bid award could turn on service factors. In addition to price there are factors concerning delivery, warranty, and technical service. Price is a major factor in such bidding competition (Voves CX-104 at 1-2; Tr. at 870-872).

695. Respondents markets "Ultralite" through competitive bidding to government agencies, and through direct sales to jobbers and sign manufacturers who are in the business of fabricating and renting signs and barricades.

696. Sales of high intensity sheeting to private contractors must comply with established state specifications for high intensity sheeting since the private contractors must comply with specifications when the signs will be used on state highways and construction projects (Chapman CPX-58 and 58A at 40-41).

697. In a majority of states there is an approval process for testing of the sheeting, and before passing these tests bidding on state contracts is not permitted (CPX-58 at 11-12).

698. Respondents' promotional literature dated March, 1986 states under the headline "Competition Is Alive and Well" the following:

> Yes, my friend, there IS a supplier other than 3-M when it comes to high-intensity sheeting for your reflective road signs.
>
> The State of Wisconsin, to its advantage, pushed for competitive bids last year. As a result the job went to a supplier who was able to underbid 3-M.

> As you might have guessed, the supplier was none other than Tucker, who represents Seibulite of America, Inc., including its "Ultralite" high-intensity reflective material.
>
> At first they said no product could compare. So Tucker asked the state to test Seibulite. It passed with flying colors.
>
> Then 3-M said nobody else had a 10-year warranty. So Tucker obtained a 10-year warranty from Seibulite. ...
>
> County and municipal people can do the same. If you're ready to buy high-intensity reflective sheeting, let Tucker know and see what kind of price he can give you.

(CX-162).

699. A letter from respondents' Chapman to the Rhode Island Department of Transportation concerning the state's approval standards for Ultralite sheeting, emphasized the price benefits and underselling competition between "Ultralite" and complainant's high intensity sheeting, as shown by the experience in the engineering grade sheeting market:

> [T]he high price which Rhode Island pays for encapsulated lens sheeting is a direct result of having only 1 approved supplier. We all know the benefits of competition, which requires a minimum of 2 vendors. As a rather graphic example, Engineering Grade sheeting on state bids has plunged from around $1.30 per square foot (when monopolized by one vendor) to its present levels of the low $0.60's, due only to the presence of multiplesuppliers. Only Seibulite offers an alternate supply source of encapsulated lens sheeting, and the potential of lower prices.

(CX-135).

700. Despite the persistently increasing price premium in retroreflective sheeting, sales have grown substantially since the McGrath sheeting was introduced in 1980, with increasing numbers of users and larger amounts sold. Engineer grade and high intensity grade sheeting are both used primarily in highway and roadside signing, and in both temporary signs such as work zone warning signs as well as more permanent signs. Although engineer grade sheeting represents the largent amount of square footage overall of retroreflective sheeting consumed in the marketplace, there has been a trend toward use of brighter materials, specifically the high intensity grade. Approximately 90% of complainant's high intensity sheeting sales are directly

to government agencies (CX-17 at 9; CX-106-111).

701. Engineer grade sheeting used for applications similar to retroreflective sheeting, is enclosed lens sheeting in which the glass beads are totally embedded in and covered by the transparent polymneric binder material, as compared to encapsulated lens high intensity sheeting in which the reflective beads are partially exposed to air within an hermetically sealed cell and are only only partially embedded in an opaque binder material. While the optical relationships of this engineer grade sheeting are constant even when water covers the sheeting, engineer grade sheeting has a lesser brilliancy or intensity of retroreflection due to the dissipation and absorption of incident light by the transparent covering material. Engineer grade sheeting is sold for applications where higher brightness is not specified. Complainant's white engineer grade sheeting has a reflective brilliance of approximately 70 candle power, while encapsulated high intensity sheeting has a reflectivity over three and one-half times greater, 250 candle power. High intensity grade sheeting has a reflectivity of over five times that of engineer grade sheeting when the incident light is at an angle of 30 degrees or more. Engineer grade sheeting has an expected useful life of 6-7 years, while high intensity grade retroreflective sheeting has greater durability and a warranteed life of 10 years use (CX-20; CX-17; CX-19; CX-23).

702. While the price of engineer grade sheeting has steadily declined since 1976, the price and sales of high intensity sheeting has steadily increased since 1980 (CX-17; CX-106-110).

703. As attested to by respondents' Chapman, decreasing volume of sales and decreased use of engineer grade sheeting over the past several years is principally due to the increased usage of high intensity sheeting (CPX-59 at 188).

704. Following are the annual dollar sales, amount and average price of engineer grade sheeting sold by complainant since 1976:

(CX-35).

705. High intensity grade retroreflective sheeting enjoys a large price premium over engineer grade retroreflective sheeting; complainant's High intensity grade sheeting in 1987 sold for more than the price per yard of complainant's engineer grade sheeting (CX-35; CX-106; CX-109).

706. Respondents first developed its super engineering grade (SEG) product and then thereafter made its substantial investment in developing greater brilliance high intensity grade sheeting (CX-154; CX-156).

707. Respondents' super engineering grade sheeting does have a higher brilliance than other engineer grade sheeting, although it has a substantially lesser brilliance than high intensity sheeting. Respondents' Chapman gave testimony that sales of complainant's high intensity sheeting may be affected by competition from various manufacturers' engineer and super engineer grade sheeting, equating super engineer and engineer grade in their effect upon high intensity sales. He explained that super engineering grade and engineering

grade sheeting may indirectly compete with high intensity sheeting, in that before government agency bid specifications for the product and request for bids are issued the lesser super engineering grade performance levels can be promoted for the application to the traffic engineer. Engineer grade sheetings do not generally achieve the target values for reflectivity of high intensity grade, and so cannot satisfy specifications established for high intensity brilliance and directly compete with high intensity product. Chapman's testimony concerning the affect of engineer and super eengineer grade sheeting conflicts with the extensive evidence of record cconcerning the comparatively increased and increasing sales of high intensity grade sheeting, despite the price premium for high intensity product (Chapman Tr. at 893-897; RX-38 at 5; CPX-58 at 145; CPX-58A at 68).

708. Respondents' price list effective December 1, 1987 gave the following prices for high volume orders of 50 yard rolls of temporary type Ultralite high intensity grade sheeting, as compared to prices for its super engineering grade sheeting:

Work Zone Prestriped Barricade Sheeting

Size	SEG	ULG	Underselling Margin %
7	161.88	236.25	31
7.75	179.27	261.63	31
8	185.00	270.00	31
12	277.50	405.00	31
Work Zone Barrel Tape			
4	92.50	140.00	34
6	138.75	210.00	34

(CX-131).

709. Following are respondents' domestic list prices effective January 1, 1986 for super engineering grade reflective sheeting as compared to

durable type Ultralite grade sheeting for 50 yard rolls:

Size	SEG	ULG	Underselling Margin %
1	25	36.25	31
24	540	870.00	38
30	675	1,087.50	38
36	1,080	1,305.00	17
Orange			
24	465	810.00	43
30	581.25	1,012.50	43
36	697.50	1,215.00	43
48	930	1,690.00	45

(CX-121, attachments thereto; CX-117).

XIV. Future Injury

Production and Export Capacity

710. Respondents' current plant in Tochigi, Japan has an annual production capacity of approximately square meters or square feet of high intensity sheeting, based on the current work year of days, and from the current Respondents' 1985 annual production capacity was thousand square meters, which in 1986. (The contrary testimony of respondents' Ebihara is without personal knowledge and is found insufficiently knowledgeable and reliable, as compared to the discovery response admission by respondents; the contrary testimony as to a lesser capacity is hearsay from a source in a different corporation and different functional areas, sales vs. production, as to whom there is an insufficient showing of knowledge and responsibility, as well as regarding other communications or other substantial indication of reliance thereon in business decisions). (CX-124 at 11, interrog. resp. No.7; Ebihara Tr. at 919-24; cf., Ebihara RX-36 at 2-3).

711. By their response filed on July 30, 1987 to the complaint, respondents admitted that the production capacity of Seibu greatly exceeded the quantity of its "Ultralite" high intensity retroreflective sheeting which it is presently importing in the U.S. (Complaint and Notice, paragraph 48, 1st sentence admitted by Response at 12).

712. Seibu Polymer Chemical Industries Co. Ltd., respondents' company which manufactures the "Ultralite" sheeting, is currently producing

713. Seibu has made preliminary plans to construct a plant which after will manufacture Ultralite sheeting, among other reflective products, in the Republic of Ireland. Half of the Ireland plant production is expected to be exported to the U.S., and the plant will be subsidized by a grant of more than 3 million Irish pounds from the Irish government (CX-164; CX-115 at 13-15; CX-116).

714. Respondents spent approximately yen in product development invenstment on retroreflective sheeting from 1982 through the first six months of 1987 (CX-121, response to interrog. no. 28).

715. From 1984 through 1987 respondent has made capital expenditures of yen associated with the manufacture of its enclosed lens Ultralite sheeting (CX-121, response to interrog. no. 58).

716. Worldwide annual sales of Ultralite sheeting manufactured in Japan are as follows, as compared to U.S. Ultralite sales:

Year	Sq. ft.	U.S. Sq. ft.	% U.S.

(CX-121 at response to interrog. 26(a)).

717. Seibu total annual production of Ultralite grade sheeting has been as follows:

(CX-124 at 12).

718. "Ultralite" sheeting is also sold in Europe through Seibulite's European distributor Beiersdorf. Allocation of Ultralite supply between the U.S. and Europe is decided in Tokyo by Seibulite International Inc. (Tr. at 890-892).

719. Seibu Polymer Chemical Industry Co. began manufacture of Ultralite reflective sheeting in November 1984. In 1987 were employed in the manufacture of reflective sheeting (C121 at response to interrog. nos. 26, 59).

720. As attested by complainant's Richelsen, with present production capacity 3M could satisfy the entire projected U.S. demand. Presently complainant's U.S. production is running only shifts on its crucial coating equipment or of capacity, with the ability to go to about using present equipment, by complainant's percentage standards (CX-46; Richelson CX-17 at 15; Tr. at 139-140).

721. Part of complainant's current domestic production of high intensity sheeting is sold abroad. Production of high intensity 3M sheeting has begun at 3M's Japanese subsidiary, with plans to increase that production volume. Also 3M is now installing equipment and facilities to produce high intensity grade sheeting in Increased foreign production will enable

complainant's U.S. facilities to dedicate more domestic capacity to domestic sales. Foreign manufactured sheeting of complainant would be sold abroad and not imported. Further, with relatively low investment complainant's equipment used to manufacture other lower priced grades of retroreflective sheeting could be modified to make additional high intensity sheeting (Richelson CX-17 at 15; Tr. at 139).

Domestic Inventory

722. Respondent Seibulite's year end U.S. inventories of imported Ultralite sheeting were as follows from 1985 to mid-year 1987, as valued approximately by purchase price replacement value, rather than by sales price:

(CX-127 at Bates no. 15153,15166, & 15187; CX-123).

Forecast Future Sales

723. Respondents in July, 1986 forecasted for their business their future year annual "Ultralite" sales in then current 1986 dollars as follows:

Actual 1987 sales were $, % of that forecast. the above projections similarly by % gives projections as above (CX-122 at Bates no. 15311).

724. Respondents' near term forecasted U.S. sales for Ultralite in the first five months of 1988 are $, as forecast more recently in May, 1987. On an annualized basis this would be equivalent to $ in sales for 1988 (CX-122 at 5).

725. Complainant's projections of future high intensity domestic market size show substantial and continued growth in volume of both U.S. and foreign sales through 1993. As shown by complainant's projections, domestic high intensity sales are expected to than sales outside the U.S. Following are complainant's forecasts for high intensity sales in thousands of dollars, separately for worldwide, non-U.S., and domestic sales

(CX-46; Richelson CX-17 at 15).

726. Respondents' forecast dollar sales, are as follows as a share of total U.S. market sales, based on complainant's U.S. market forecasts:

Year	U.S Market	Ultralite Frcst	% Ultralite

Marketing and Approval

727. Currently "Ultralite" grade sheeting is approved for use in about states. The product is under testing for approval in the remaining states, and Seibulite's goal is to have it approved in all fifty states. Further approval is a matter of time. Recently California approved the product while Oregon took it off the approved list to requiring more testing. In November 1985 approximately states had approved respondents' high intensity grade sheeting. Chapman's testimony did not detail any kinds of problems experienced in respondents' attempts to seek approval, beyond a need for more tests in certain states; no specific reason has been given why Ultralite product will not pass these tests nor has an explication of any indicative test failures been given (Chapman RX-38 at 3; Tr. at 889, 906; Deposition CPX-58A at 18-22; Richelson Tr. at 145-146).

728. While the approval process for high intensity grade products can take longer than for engineering grade sheeting due to tests done to prove the longer product life of high intensity product, Seibu is approved in more states for engineering grade sheeting than it currently is for high intensity product. The qualification procedure in some states involves outdoor exposure tests; the duration of such tests can vary from state to state, and generally they are from 1 to 2 years in length (Richelson Tr. at 146; Chapman Tr. at 910).

729. Respondents' national sales manager Chapman testified that it is Seibu's intent to increase sales of Ultralite in the U.S. Though not approved or sold in all states, it is promoted nationwide (Deposition CPX-58A at 147, 21; CX-124 at 24, response to interrog. no. 14).

730. Respondents have outside company sales representatives who sell its refelective sheeting in certain areas. Tucker Company located in Wisconsin, L & C Marketing Group in Canton, Massachusetts, and TIJ Materials in New York City are Seibu's outside sales representative companies handling sheeting. Seibulite also has 4 full time domestic sales representatives (CPX-58A at 34; CX-162; CPX-58 at 12).

731. "Ultralite" sheeting is sold through its official U.S. distributor Seibulite International Inc. to customers in the private sign shop business, customers who are in the business of fabricating and renting traffic barricades, barrels, and through bidding with states, cities and counties. Not all of respondents' sales are made through its four sales representative, for example they are often made by telephone order. Respondents could hire more sales representatives if an increase in sales merited it (Chapman Dep. CPX-58A at 65; Chapman Tr. at 890-892).

732. Respondents' total annual domestic advertising and promotion expenditures are as follows:

(CX-120 at response to interrog. no. 43).

733. At no charge Seibu has distributed approximately feet of high intensity sheeting on a promotional basis to various customers and potential customers (CX-124 at 14).

734. "Ultralite" sheeting has been promoted at six trade shows/ exhibitions:

1) American Traffic Safety Services Assn.(ATSSA) February 26-28,1985
Traffic EXPO '85, San Diego, California
2) ATSSA March 1-3, 1986
Traffic EXPO '86, San Antonio, Tx

3) Flasher Barricade Assn.
Annual Vendors Night, San Diego, Ca.
4) ATSSA March 1-3, 1987
Traffic EXPO '87, Las Vegas, Nev.
5) Institute of Traffic Engineers March 18, 1987
Vendors Night, Lodi, Ca.
6) Traffic & Highway Safety Product Show May 21, 1987
Southfield, Mich.

(CX-124 at 14-15).

735. Seibu Japan has in 1985 of yen and in 1986 of yen on U.S. sales of "Ultralite". Respondents' U.S. office has sustained a 1985 net on U.S. sales, and a in 1986. Worldwide sales of "Ultralite" respondents resulted in (CX-121, response to interrog. no. 52; CX-124 at 19).

736. Sales of "Ultralite" reflective sheeting are constrained by "Buy America" laws in New Jersey where state law prevents approval for "Ultralite" sales. Respondents won an "Ultralite" bid award in Missouri in July, 1987. Sometime thereafter Misouri passed legislation constraining to some extent state purchases of foreign made products. Additionally, respondents cannot bid on the annual federal Government Services Administration contract because of the foreign product (RX-38 at 6; Tr. at 902-904; CX-105; CX-161; CPX-59 at 176).

737. The West Virginia Department of Highways sued respondents in March, 1985 concerning such sheeting experienced discoloration due to adhesive problems. The State of North Carolina similarly filed suit against respondents for such problems in April, 1985.

(CX-117; CX-118; RX-38 at 3; Tr. at 904-905; CPX-59 at 179-180; Richelsen Tr. at 146).

Underselling

738. While respondents have increased its list prices effective December 1987, respondents' national sales manager Chapman testified that the average price has increased slightly over the past year (Tr. at 910; CX-131).

739. Following are selected "Ultralite" list prices for high volume (over 2,000 sq. ft. orders) on 50 yard roll list prices effective December, 1987, as compared to those effective January, 1986:

Size	Sq.Ft.	1/1986	$/Sq.Ft.	12/1987	$/Sq.Ft.
1"	12.5	36.88	2.95	36.25	2.9
3"	37.5	110.63	2.95	108.75	2.9
6.75"	84.4	248.98	2.95	NA	
12.75	159.4	446.32	2.8	462.26	2.9
24"	300	840.00	2.8	870.00	2.9
30"	375	1,050.	2.8	1,087.50	2.9
36"	450	1,260.	2.8	1,305.00	2.9

Orange					
24"	300	780.00	2.6	810.00	2.7
30"	375	975.00	2.6	1,012.50	2.7
36"	450	1,170.00	2.6	1,215.00	2.7
Prestriped Barricade Sheeting					
4"	50	130.05	2.6		
6"	75	195.05	2.6		
7"	87.5	227.59	2.6	236.25	2.7
8"	100	260.10	2.6	270.00	2.7
12"	150	390.15	2.6	405.00	2.7
ULG Work Zone Barrel Barricade Tape					
4"	50	137.50	2.75	140.00	2.8
6"	75	206.25	2.75	210.00	2.8

(CX-131).

740. Complainant's published list prices, with the exception of work zone temporary type sheeting increased on October 1, 1987 over the previous year. Complainant published list prices effective October 1, 1987 for high intensity retroreflective sheeting are as follows, as compared to its October 1, 1986 list prices:

Complainant's Scotchlite Reflective Sheeting

Size	1987	$/Sq.Ft.	1986	$/Sq.Ft.	Sq.Ft.
Silver & Yellow					
6"	259.20	3.46	254.10	3.39	75
8"	345.60	3.46	338.80	3.39	100
9"	388.80	3.46	381.15	3.39	112.5
12"	518.40	3.46	508.20	3.39	150
18"	777.60	3.46	762.30	3.39	225
24"	1,036.80	3.46	1,016.40	3.39	300
30"	1,296.	3.46	1,270.50	3.39	375
36"	1,555.20	3.46	1,524.60	3.39	450
42"	1,814.40	3.46	1,778.70	3.39	525
48"	2,073.6	3.46	2,032.80	3.39	600
Roll Borders					
3/4"	42.30	4.5	41.45	4.4	9.4
1"	43.20	3.46	42.35	3.39	12.5
1 1/4"	54.00	3.46	52.95	3.39	15.6
2"	86.40	3.46	84.70	3.39	25
3"	129.60	3.46	127.05	3.39	37.5

(Sheeting in the colors red, blue, green and brown are available at approximately 10% additional price).

Scotchlite Reflective Sheeting with Work Zone Identification

(no increase)					
Solid Colors					
4"		163.00	3.26		50
6"		244.50	3.26		75

18"	733.50	3.26	225
24"	978.00	3.26	300
30"	1,222.50	3.26	375
36"	1,467.00	3.26	450
48"	1,956.00	3.26	600
Striped Barricade Sheeting			
6"	244.50	3.26	75
8"	326.00	3.26	100
12"	489.00	3.26	150
24"	978.00	3.26	300
36"	1,467.00	3.26	450

CX-47: CX-48.

741. Complainant's annual sales of high intensity Scotchlite brand sheeting (excluding fabricated items) is as follows, including average prices per square foot;

742. Complainant's annual sales of fabricated items from high intensity sheeting are as follows:

743. The U.S. selling price for "Ultralite" sheeting (ULG) and Ultralite sheeting which is pre-striped for work zone barricades (ULG PSB) from Seibulite is as follows for 1985-1987, with average prices per square

744. The average prices above for "Ultralite" and complainant's Scotchlite brands of high intensity sheeting (rolls and sheets) are as follows:

746. It has been complainant's general policy to bid and sell high intensity sheeting at its published prices including published discounts, the maximum discount generally being the list price less 10% for orders over $2500. Complainant will have to abandon this policy with continued competition from Seibulite (CX-17 at 15; CX-47; CX-104 at 3).

747. Complainant's published list price for high intensity sheeting, including maximum discount, has increased steadily from 1975 when it was $2.00 per square foot to th $3.11 per square foot in 1987 (Voves CX-104 at 6; CX-109).

Engineer Grade Price Depression

748. In the highly similar market for engineering grade reflective sheeting, entry of respondents' manufactured engineer grade product in the U.S. market in 1975 in part resulted in a steady decline in 3M average prices experienced after 1981, with respondents' product underbidding complainant's price. Complainant's lost its first bid on engineer grade sheeting to Mitsubishi for product manufactured by respondents. Avery, a domestic company, and Kiwalite, a different Japanese concern, were other competitors who also competed in the engineer grade market. Mitsubishi, an independent corporation, was the U.S. distributor of respondents' product when it was introduced into the market; respondents' U.S. national sales manager Chapman was previously employed with Mitsubishis. During respondents' recent distribution of its engineer grade product, its prices have generally been above those of complainant and another competitor Avery (Voves Tr. at 867-869: CX-104 at 3-4; CX-106-108; Chapman CPX-58 at 4, 6).

749. From 1975-1977 the low price leader was Mitsubishi bidding with Seibu engineer grade sheeting, and its prices dropped in this time from $.99 to $.79 a square foot (CX-108).

750. As attested to by complainant's bid pricing manager Voves, respondents apparent strategy is to withdraw from the U.S. engineer grade market and to shift to high intensity sales; this testimony is uncontradicted. Seibulite is now bidding engineer grade at prices known to be safely above current bidding prices, while bidding Ultralite at lower than complainant's current prices (CX-104 at 6).

751. With respondents' low bids for "Ultralite" sheeting, complainant will have to lower its bid prices on government contracts within

the next year, and has reduced its price on recent state contracts. Complainant's present policy for high intensity is to bid on a government contract at net prices, published list prices with published discounts. The bidding situation for engineer grade sheeting is the same for high intensity grade sheeting, as stated by complainant's Voves. Respondents have has succeeded in becoming qualified for "Ultralite" with states and local governments so that bid price becomes a primary deciding criterion in award of the bid. To compete complainant will have to lower its price, lowering returns, and given the demonstrated willingness to undersell by respondents, respondents can be expected to further lower its prices, as attested by Voves and Richelsen. If respondents continue to sell "Ultralite" sheeting in the United States, then prices will decrease and 3M's average prices for high intensity sheeting would decline along with profitability. The probative value of the experience of price depression in the similar engineer grade product market has been cited by respondents in their promotion of "Ultralite" sheeting (Voves CX-104 at 5-6; Richelson CX-17 at 17; Tr. at 131-133, 138-143; CX-135).

752. The McGrath '159 patent expires on May 24, 1994 (CX-1).

CONCLUSIONS OF LAW

1. The Commission has in rem jurisdiction and subject matter jurisdiction.

2. The Commission has in personam jurisdiction over the respondents.

3. Claims 1, 3-5 and 7 of the '159 patent are not invalid.

4. Claims 1, 3-5 and 7 of the '159 patent are not unenforceable.

5. Complainant has sustained its burden in establishing that respondents infringe claims 1, 3-5 and 7 of the '159 patent.

6. There is a domestic industry comprised of complainant's domestic production and sale of its high intensity retroreflective sheeting according to the asserted claims of the '159 patent.

7. The domestic industry is efficiently and economically operated.

8. Importation and sale of respondents' high intensity retroreflective sheeting does have the effect and tendency to injure substantially the domestic industry in issue.

9. There is a violation of section 337.

Based on the foregoing findings of fact, conclusions of law, the opinion, and the record as a whole, and having considered all of the pleadings and arguments presented orally and in briefs, as well as proposed findings of fact, it is the administrative law judge's determination that there is a violation of section 337 in the alleged unauthorized importation into, and sale in, the United States of certain high intensity retroreflective sheeting by reason of alleged infringement of certain claims of the '159 patent, with the effect and tendency to destroy or substantially injure an industry efficiently and economically operated in the United States.

The administrative law judge hereby CERTIFIES to the Commission the initial determination, together with the record in this investigation consisting of the following:

1. The transcript of the hearing;
2. The Exhibits admitted into evidence and the Exhibits in which objections have been sustained; and
3. ALJ Exhibit 1.

The pleadings of the parties are not certified, since they are already in the Commission's possession in accordance with Commission Rules of Practice and Procedure.

Further it is ORDERED that:

1. In accordance with Rule 210.44(b), all material heretofore marked in camera because of business, financial, and marketing date found by the administrative law judge to be cognizable as confidential business information under Rule 201.6(a), is to be given in camera treatment continuing after the date this investigation is terminated.

2. Counsel for the parties shall have in the hands of the administrative law judge those portions of the initial determination and Order No. 16 (relating to complainant's motion to strike and dated April 15, 1988) which contain confidential business information to be deleted from the public version of the initial determination and Order No. 16 no later than Friday April 29, 1988. If no comments are received from a party it will mean that the party has no objection in removing the confidential status, in its entirety, from this initial determination.

3. This initial determination shall become the determination of the Commission forty-five (45) days after the service thereof, unless the Commission, within forty-five (45) days after the date of filing of the initial determination shall have ordered review of the initial determination of certain issues therein pursuant to 19 C.F.R. 210.54(b) or 210.55 or by order shall have changed the effective date of the initial determination.

Paul J. Luckern
Administrative Law Judge

Issued: April 15, 1988

UNITED STATES INTERNATIONAL TRADE COMMISSION
WASHINGTON, D. C.

Before Paul J. Luckern
Administrative Law Judge

DOCKET/USITC

In the Matter of CERTAIN HIGH INTENSITY RETROREFLECTIVE SHEETING	Investigation No. 337-TA-268

RESPONDENTS' FINAL EXHIBIT LIST

I.

RESPONDENTS' DOCUMENTARY EXHIBITS

EXHIBIT NUMBER*	STATUS	SPONSOR	TITLE
RX-1C (3M)	Admitted	McGrath	McGrath invention disclosure; Form 3168-E, Record of Invention No. 8 dated September 18, 1973; Subject: Radiation Curable High Intensity Sheeting.
RX-2C (3M)	Admitted	Tamte	Letter dated June 11, 1974 from R. R. Tamte to A. Schwartz; Re: Preliminary patentability search, McGrath, F. N. 29,024.

*(PARTY CLAIMING CONFIDENTIAL STATUS)

EXHIBIT NUMBER*	STATUS	SPONSOR	TITLE
RX-3C (3M)	Admitted	Tamte	Letter dated June 27, 1974 from L. Allahut to R. R. Tamte; Re: Preliminary Patentability Search McGrath, F. N. 29,024.
RX-4	Admitted	Smook	Patent Office action dated June 25, 1976 in McGrath patent application Serial No. 658,284.
RX-5	Admitted	Smook	Amendment dated September 23, 1976 in McGrath patent application Serial No. 658,284.
RX-6	Admitted	Smook	Amendment Under Rule 312 dated January 17, 1977 in McGrath patent application. Serial No. 658,284.
RX-7	Admitted	Tamte	List of patents prosecuted by Mr. Roger Tamte.
RX-8C (3M)	Admitted	Covert (by deposition)	Drawing by William C. Covert made December 9, 1987 entitled "ENGINEER GRADE SCOTCHLITE BRAND REFLECTIVE SHEETING, SOLD IN U.S. BY 3M PRIOR TO 1974."
RX-9C (Seibu)	Objection sustained	Kobayashi	Table I identifying composition of Seibu enclosed lens sheeting.

(PARTY CLAIMING CONFIDENTIAL STATUS)

EXHIBIT NUMBER*	STATUS	SPONSOR	TITLE
RX-10C (Seibu)	Objection sustained	Kobayashi	Figures 1-4 of drawings entitled "Preparation of Seibu Enclosed Lens Sheeting-1973."
RX-11C (Seibu)	Objection sustained	Kobayashi	Figures 5 and 6 of drawings entitled "Preparation of Seibu Enclosed Lens Sheeting-1973."
RX-12C (Seibu)	Objection sustained	Kobayashi	Figures 7, 8 and 9 of drawings entitled "Preparation of Seibu Enclosed Lens Sheeting-1973."
RX-13C (Seibu)	Admitted	Kobayashi	Figures 1 and 2 of drawings entitled "Preparation of Seibu Encapsulated Lens Sheeting-ULTRALITE."
RX-14C (Seibu)	Admitted	Kobayashi	Figures 3 and 4 of drawings entitled "Preparation of Seibu Encapsulated Lens Sheeting-ULTRALITE."
RX-15C (Seibu)	Admitted	Kobayashi	Figures 5, 6 and 7 of drawings entitled "Preparation of Seibu Encapsulated Lens Sheeting-ULTRALITE."
RX-16C (Seibu)	Admitted	Ebihara	Chart showing the production limits of ULTRALITE sheeting
RX-17C (Seibu)	Admitted	Ebihara	Chart showing ULTRALITE sales in 1987

(PARTY CLAIMING CONFIDENTIAL STATUS)

EXHIBIT NUMBER*	STATUS	SPONSOR	TITLE
RX-18	Admitted	Stipulation	Complainant's price list reflecting May 15, 1987 and October 1, 1987 prices for identical products.
RX-19	Admitted	Kobayashi	Document dated August 10, 1984 by Dr. E. Dinne entitled "Translation" (handwritten notes from January 1984 Tokyo meeting).
RX-20	Admitted	Kobayashi	Letter dated December 5, 1984 from S. Kobayashi to R. L. Erickson.
RX-21	Admitted	Kobayashi	Letter dated January 7, 1985 from R. L. Erickson to S. Kobayashi.
RX-22	Admitted	Kobayashi	Letter dated December 26, 1985 from S. Kobayashi to R. L. Erickson (and 1 page enclosure thereto entitled "McGrath (U.S. 4,025,159) Cellular Retroreflective Sheeting Cross-Section").
RX-23	Admitted	Kobayashi	Document dated April 26, 1984 entitled "Report on Heat Shrinkage Test".
RX-24	Admitted	Kobayashi	Document dated May 10, 1984 entitled "Adhesion Test - Razor Blade Test."
RX-25C (3M)	Admitted	Grunzinger	Pages from 3M Notebook 66365.

(PARTY CLAIMING CONFIDENTIAL STATUS)

EXHIBIT NUMBER*	STATUS	SPONSOR	TITLE
RX-26C (3M)	Admitted	Grunzinger	Pages from 3M Notebook 68498.
RX-27C (3M)	Admitted	Grunzinger	Pages from 3M Notebook 66365.
RX-28C (3M)	Admitted	Grunzinger	Pages from 3M Notebook 68498.
RX-29C (3M)	Admitted	Grunzinger	Note entitled "Seibulite High Intensity Type Sheeting Analysis."
RX-30C (3M)	Admitted	Grunzinger	Memo dated August 6, 1985 entitled "Data Analysis of Ultralite Bead Bond Simulation."
RX-31C (3M)	Admitted	Erickson	Memo dated June 9, 1983 entitled "Seibu's Competitive Review."
RX-32C (3M)	Admitted	Grunzinger	3M Technical Report Summary for the period July-December 1985.
RX-33C (3M)	Admitted	Erickson	Document entitled "Japan Trip-January, 1984 -R. L. Erickson."
RX-34C (Seibu)	Admitted	Kobayashi	Report dated February 16, 1984 entitled "Adhesion Strength Test" (in Japanese).

(PARTY CLAIMING CONFIDENTIAL STATUS)

EXHIBIT NUMBER*	STATUS	SPONSOR	TITLE
RX-35C (Seibu)	¶¶1-19&31-42 admitted; ¶¶20-30 objection sustained	Kobayashi	Witness statement of Sadao Kobayashi.
RX-36C (Seibu)	¶¶1-4&6-7 admitted; ¶5 objection sustained	Ebihara	Witness statement of Hidehiko Ebihara.
RX-37	Admitted	Sharpe	Witness statement of Louis H. Sharpe.
RX-38C (Seibu)	Admitted	Chapman	Witness statement of Scott N. Chapman.
RX-39	Admitted	Sharpe	Rebuttal witness statement of Louis H. Sharpe.
RX-40 (Seibu)	Admitted	Kobayashi	Rebuttal witness statement of Sadao Kobayashi.
RX-41C (3M)	Admitted	Grunzinger	Memo dated August 4, 1983 regarding "Acrylic-Urethane Cushion Cost."
RX-42C (3M)	Admitted	Stipulation	Report dated January 6, 1988 showing 3M's sales of retroreflective sheeting.
RX-43C (3M)	Admitted	Bingham	Page 48 from 3M Technical Notebook No. 30328.
RX-44C (3M)	Admitted	Erickson	Technical Report, Analysis of Beiersdorf Encapsulated Lens

---

(PARTY CLAIMING CONFIDENTIAL STATUS)

EXHIBIT NUMBER*	STATUS	SPONSOR	TITLE
			Retroreflective Sheeting Sample.
RX-45C (Seibu)	Admitted	DeVries	Respondents' Responses to Complainant's Interrogatories Nos. 16 and 17.
RX-46C (Seibu)	Admitted	DeVries	Letter dated November 20, 1987 from P.L. Gardner to A.L. Underhill; Re: 3M v. Seibu.
RX-47C (Seibu)	Admitted	DeVries	Letter dated January 7, 1988 from A.L. Underhill to P.L. Gardner; Re: Investigation No. 337-TA-268, In the Matter of Certain High Intensity Retroreflective Sheeting.
RX-48C (Seibu)	Admitted	DeVries	Letter dated January 7, 1988 from A.L. Underhill to P.L. Gardner; Re: Investigation No. 337-TA-268, In the Matter of Certain High Intensity Retroreflective Sheeting.
RX-49C (Seibu)	Admitted	Smook	Table 1 - 180° Peel Test Data.
RX-50C (Seibu)	Admitted	Smook	Graph - Relationship Between Residual Solvent and 180° Peel Strength (0 day).
RX-51C (Seibu)	Admitted	Smook	Graph - Relationship Between Residual Solvent (approximate) and 180°

(PARTY CLAIMING CONFIDENTIAL STATUS)

EXHIBIT NUMBER*	STATUS	SPONSOR	TITLE
			Peel Strength (Aging at 50°C - 7th day).
RX-52C (Seibu)	Admitted	Smook	Graph - 180° Peel Strength (11%).
RX-53C (Seibu)	Admitted	Smook	Graph - 180° Peel Strength (8.8%).
RX-54C (Seibu)	Admitted	Smook	Graph - 180° Peel Strength (4.8%).
RX-55C (Seibu)	Admitted	Smook	Graph - 180° Peel Strength (2.73%).
RX-56C (Seibu)	Admitted	Smook	Graph - 180° Peel Strength (1.55%).
RX-57	Admitted	Smook	Curriculum Vitae of Malcolm A. Smook.
RX-58	Admitted	Sharpe	Curriculum Vitae of Dr. Louis H. Sharpe.
RX-59C (3M)	Admitted	Grunzinger	Traffic Control Materials Division, Semiannual Report - Second Half, 1985.
RX-60C (3M)	Admitted	Grunzinger	Memo dated February 18, 1986 from J. LaPerre to R. Richelsen; Subject: Seibu Infringement.

(PARTY CLAIMING CONFIDENTIAL STATUS)

II.

RESPONDENTS' PHYSICAL EXHIBITS

EXHIBIT NUMBER*	STATUS	SPONSOR	TITLE
RPX-1	Admitted	Smook	Blowup of claim 1 of McGrath Patent.
RPX-2	Admitted	Smook	Blowup of language in Col. 2 in McGrath patent.
RPX-3	Admitted	Smook	Blowup of dependent claims 3-5 and 7 of McGrath Patent.
RPX-4	Admitted	Smook	Blowup of McGrath patent drawings.
RPX-5	Admitted	Smook	Blowup of language from columns 5 and 7 of the McGrath patent.
RPX-6	Admitted	Smook	Blowup of page 2 of "Amendment" from prosecution history of McGrath application, highlighted.
RPX-7	Admitted	Smook	Blowup of page 3 of "Amendment" from prosecution history of McGrath application, highlighted.
RPX-8	Admitted	Smook	Blowup of page 4 of "Amendment" from prosecution history of McGrath application, highlighted.

(PARTY CLAIMING CONFIDENTIAL STATUS)

EXHIBIT NUMBER*	STATUS	SPONSOR	TITLE
RPX-10	Admitted	Smook	Blowup of pages 5 and 6 of "Amendment" from prosecution history of McGrath application, highlighted.
RPX-12	Admitted	Smook	Blowup of page 3 of "Amendment Under Rule 312" from prosecution history, highlighted.
RPX-13	Admitted	Smook	Blowup of illustration entitled "Lemelson Patent 3,676,249" (Number 1).
RPX-14	Admitted	Smook	Blowup of illustration entitled "Lemelson Patent 3,676,249" (Number 2).
RPX-15	Admitted	Smook	Blowup of illustration entitled "Lemelson Patent 3,676,249" (Number 3).
RPX-16	Admitted	Smook	Blowup of illustration entitled "Lemelson Patent 3,676,249" (Number 4).
RPX-18	Admitted	Smook	Blowup of illustration entitled "Frigstad Patent" (Number 1).
RPX-19	Admitted	Smook	Blowup of illustration entitled "Frigstad Patent" (Number 2).
RPX-24	Admitted	Smook	Blowup of drawings from McKenzie Patent 3,190,178.

(PARTY CLAIMING CONFIDENTIAL STATUS)

EXHIBIT NUMBER*	STATUS	SPONSOR	TITLE
RPX-25	Admitted	Smook	Blowup of important text from McKenzie Patent 3,190,178.
RPX-26	Admitted	McGrath	Blowup of invention disclosure of March 29, 1974, highlighted.
RPX-27	Admitted	Tamte	Blowup of preliminary search report letter of June 27, 1974, highlighted.
RPX-28	Objection sustained	Smook or Kobayashi	Blowup of illustration of 1974-vintage Seibu enclosed lens sheeting.
RPX-29	Admitted	Smook	Blowup of chart illustrating McGrath process and Ultralite process of manufacture.
RPX-30	Admitted	Smook	Blowup of chart illustrating Ultralite structure.
RPX-31	Admitted	Smook	Blowup of Tamte search request dated June 11, 1974.
RPX-32	Admitted	McKenzie (by deposition)	McKenzie deposition transcript.
RPX-33	Admitted	Covert (by deposition)	Covert deposition transcript.
RPX-34	Admitted	Frigstad (by deposition)	Frigstad deposition transcript.

(PARTY CLAIMING CONFIDENTIAL STATUS)

EXHIBIT NUMBER*	STATUS	SPONSOR	TITLE
RPX-41	Admitted	Smook	Blowup of chart comparing McGrath sheeting with McKenzie, Palmquist and Gebhard prior art sheeting.
RPX-42	Admitted	McGrath	List of Ingredients from CX-65C pages 22-24.
RPX-43	Admitted	McGrath	Representation of the last paragraph of column 4, U.S. Patent No. 4,025,159.
RPX-44	Admitted		uncured 3M sheeting
RPX-45	Admitted	Erickson	Razor Blade Test per Dr. Erickson
RPX-46	Admitted	Erickson	Drawing of Beiersdorf Sample Analyzed in 1983.
RPX-47	Admitted	Erickson	List of Materials Needed for Razor Blade Test.
RPX-48	Admitted	DeVries	Tests on Seibu ULG.
RPX-49	Admitted	DeVries	Videocassette - 3M Razor Blade Test.

(PARTY CLAIMING CONFIDENTIAL STATUS)

EXHIBIT NUMBER*	STATUS	SPONSOR	TITLE
RPX-59	Admitted	Kobayashi	Respondents' counter-designations of the deposition of Sadao Kobayashi, Volume 3.

SEIBULITE INTERNATIONAL INC.
SEIBU POLYMER CHEMICAL INDUSTRY CO, LTD.

By their attorneys,

Dated: February 26, 1988

Stuart Lubitz
Paul L. Gardner
John P. Spitals
SPENSLEY HORN JUBAS & LUBITZ
1880 Century Park East
Fifth Floor
Los Angeles, California 90067
(213) 553-5050

Edward M. Lebow
KELLEY, DRYE & WARREN
1330 Connecticut Avenue
Suite 600
Washington, D.C. 20036
(202) 463-8333

(PARTY CLAIMING CONFIDENTIAL STATUS)

CERTIFICATE OF SERVICE

I hereby certify that the foregoing "Respondents' Final Exhibit List" was served by Federal Express, for next business day delivery*, on this 26th day of February, 1988, upon the following:

Kenneth R. Mason, Secretary
U.S. International Trade Commission
500 E Street, S.W.
Room 112
Washington, D.C. 20436
(original and 6 copies)

The Hon. Paul J. Luckern
Administrative Law Judge
U.S. International Trade Commission
500 E Street, S.W.
Room 213
Washington, D.C. 20436
(two copies)

Ms. Marcia H. Sundeen
1921 Park Road, N.W.
Washington, D.C. 20010
(one copy)
* Saturday delivery

Robert Edell, Esq.
Merchant, Gould, Smith, Edell,
Welter & Schmidt, P.A.
1600 Midwest Plaza Bldg.
801 Nicollet Mall
Minneapolis, Minnesota 55402
(one copy)
* Saturday delivery

Karen M. Efron

KAREN M. EFRON

UNITED STATES INTERNATIONAL TRADE COMMISSION
WASHINGTON, D. C.

Before Paul J. Luckern
Administrative Law Judge

In the Matter of

CERTAIN HIGH INTENSITY
RETROREFLECTIVE SHEETING

Investigation No. 337-TA-268

COMPLAINANT'S FINAL HEARING EXHIBIT LIST

DOCUMENTARY EXHIBITS

Obj	Off	Rec	No.	Description and Purpose	Sponsoring Witness
___	___	R	1	United States Patent McGrath 4,025,159, patent-in-suit	
___	___	R	2	File History of United States Patent McGrath 4,025,159, patent-in-suit	
___	___	R	3	United States Patent Weber 3,140,340, art of record to patent-in-suit	
___	___	R	4	United States Patent McKenzie 3,190,178, art of record to patent-in-suit	
___	___	R	5	United States Patent Bassemir 3,558,387, art of record to patent-in-suit	
___	___	R	6	United States Patent Moore 3,681,167, art of record to patent-in-suit	
___	___	R	7	United States Patent Holmen 3,924,929, art of record to patent-in-suit	
___	___	R	8	United States Patent Lemelson 3,676,249, art relied on by respondents	
___	___	R	9	United States Patent Frigstad 3,472,730, art relied on by respondents	
___	___	R	10	United States Patent Palmquist 2,543,800, art relied on by respondents	
___	___	R	11	United States Patent Schwab 3,795,435, art relied on by respondents	
___	___	R	12	United States Patent Hendricks 2,956,904, art relied on by respondents	

___	___	R	13	United States Patent Miyata 4,653,854, patent assigned to Seibu	
___	___	R	14	File History of United States Patent Miyata 4,653,854, patent assigned by Seibu	
___	___	R	15	United States Patent Gebhard et al. 2,326,634, showing exposed lens structure	Richelsen
___	___	R	16	United States Patent Palmquist et al. 2,407,680, showing enclosed lens structure	Richelsen
___	___	R	17C	Witness statement of Raymond Richelsen 3M CONFIDENTIAL	Richelsen
___	___	R	18	1986 annual report of 3M	Richelsen
___	___	R	19	3M brochure, "The Brighter Way to Safer Roads"	Richelsen
___	___	R	20	3M brochure, "Introduction to Reflective Materials"	Richelsen
___	___	R	21	3M brochure, "Visible Signs of Success"	Richelsen
___	___	R	22C	Compilation of complaints on high intensity delamination 1975-1987, 3M CONFIDENTIAL	Richelsen
___	___	R	23	Warranty for 3M high intensity sheeting	Richelsen
___	___	R	24	3M product literature, high intensity grade samples (colored)	Richelsen
___	___	R	25	3M product literature, high intensity grade 3820 pre-printed barricade sheeting	Richelsen
___	___	R	26	3M product literature, high intensity grade 2820/3820 series	Richelsen
___	___	R	27	3M product literature, product bulletin 103 and attachment 1, encapsulated lens 2800/3800 system	Richelsen
___	___	R	28	3M product literature, product bulletin 102 and attachments 1-6, encapsulated lens sheeting	Richelsen
___	___	R	29	3M brochure, "Make construction work zones safer..."	Richelsen
___	___	R	30	3M benefits highlights	Richelsen

___	___	R	31C	3M capital expenditures and investment in equipment, 3M CONFIDENTIAL	Richelsen
___	___	R	32C	Authority for expenditure documents for equipment and plant modifications 1983-1987, 3M CONFIDENTIAL	Richelsen
___	___	R	33C	Capitalization Value and Expected Equipment Expense, 3M CONFIDENTIAL	Richelsen
___	___	R	34C	Representative United States Suppliers to 3M, 3M CONFIDENTIAL	Richelsen
___	___	R	35C	Sales history of 3M high intensity sheeting, dollars and square yards, 1979-1987, 3M CONFIDENTIAL	Richelsen
___	___	R	36C	3M engineer grade sales volume 3M CONFIDENTIAL	Richelsen
___	___	R	37C	3M high intensity advertising and merchandising purchases, 3M CONFIDENTIAL	Richelsen
___	___	R	38	3M brochure, "How to improve your motorists' vision at night"	Richelsen
___	___	R	39	3M brochure, "Your third grader will be an adult before this 3M high intensity sign shows its age"	Richelsen
___	___	R	40	3M brochure, "3M Traffic Control Materials dramatically improve a motorist's vision"	Richelsen
___	___	R	41	3M brochure, "The way some construction zones are marked really kills people"	Richelsen
___	___	R	42	Media schedule of print advertising 3M TCM	Richelsen
___	___	R	43C	3M profits from high intensity sheeting 1982-1987, 3M CONFIDENTIAL	Richelsen
___	___	R	44C	3M volume of production of high intensity sheeting 1982-1987, 3M CONFIDENTIAL	Richelsen
___	___	R	45C	3M domestic inventory of high intensity sheeting, 1982-1987, 3M CONFIDENTIAL	Richelsen
___	___	R	46C	3M estimates of sales of high intensity, 3M CONFIDENTIAL	Richelsen
___	___	R	47	3M's published price lists effective October 1, 1987, for high intensity sheeting	Richelsen

___	___	R	48	3M's published price lists effective October 1, 1986, for high intensity sheeting	Richelsen
___	___	R	49C	Price matching information, 3M CONFIDENTIAL	Richelsen
___	___	R	50	Witness statement of W. Karl Bingham	Bingham
___	___	R	51C	Reflective Products Division Release Memorandum No. 311 dated June 8, 1961, (RDX 116), 3M CONFIDENTIAL	Bingham
___	___	R	52C	3M Technical Report Summary dated April 15, 1965, (RDX 119), 3M CONFIDENTIAL	Bingham
___	___	R	53C	Reflective Product Division Factory Experiment No. RFE 745, (RDX 118), 3M CONFIDENTIAL	Bingham
___	___	R	54C	3M Technical Report Summary dated January 1968, (RDX 121), 3M CONFIDENTIAL	Bingham
___	___	R	55C	3M Technical Report Summary dated July 18, 1968, (RDX 122), 3M CONFIDENTIAL	Bingham
___	___	R	56C	3M Technical Report Summary dated July 24, 1969, (RDX 125), 3M CONFIDENTIAL	Bingham
___	___	R	57C	3M Technical Report Summary dated January 22, 1970, (RDX 127), 3M CONFIDENTIAL	Bingham
___	___	R	58C	Meeting Minutes dated March 18, 1971, (RDX 130), 3M CONFIDENTIAL	Bingham
___	___	R	59C	Meeting Minutes dated March 30, 1971, (RDX 131), 3M CONFIDENTIAL	Bingham
___	___	R	60C	Meeting Minutes dated August 25, 1971, (RDX 133), 3M CONFIDENTIAL	Bingham
___	___	R	61C	Meeting Minutes dated October 1, 1971, (RDX 134), 3M CONFIDENTIAL	Bingham
___	___	R	62C	Progress Report Second Half 1972 dated January 15, 1973, (RDX 117), 3M CONFIDENTIAL	Bingham
___	___	R	63	Witness statement of Joseph McGrath	McGrath
___	___	R	64C	Pages from McGrath notebook 27891 3M CONFIDENTIAL (RDX 36)	McGrath
___	___	R	65C	Pages from McGrath notebook 36745 3M CONFIDENTIAL (RDX 26)	McGrath

___	___	R	66C	Pages from McGrath notebook 38243 3M CONFIDENTIAL (RDX 27)	McGrath
___	___	R	67C	Pages from McGrath notebook 39756 3M CONFIDENTIAL (RDX 30)	McGrath
___	___	R	68C	Pages from McGrath notebook 41867 3M CONFIDENTIAL (RDX 31)	McGrath
___	___	R	69C	Pages from McGrath notebook 43688 3M CONFIDENTIAL	McGrath
___	___	R	70C	Pages from Hangge notebook 41857 3M CONFIDENTIAL	McGrath
___	___	R	71C	Pages from Johnson notebook 37757 and 41306, 3M CONFIDENTIAL	McGrath
___	___	R	72C	Pages from Johnson notebook 43473 3M CONFIDENTIAL	McGrath
___	___	R	73C	Log entries for weathering tests, 3M CONFIDENTIAL	McGrath
___	___	R	74C	Results of weathering tests, 3M CONFIDENTIAL	McGrath
___	___	R	75	Record of Invention dated March 29, 1974 (RDX 25)	McGrath
___	___	R	76	Assignment of McGrath patent	McGrath
___	___	R	77	Factory experiment documents dated 1974	McGrath
___	___	R	78C	Technical Summary Report dated November 24, 1980, 3M CONFIDENTIAL	McGrath
___	___	R	79	Witness Statement of Randall Erickson	Erickson
___	___	R	80C	3M R&D Investment for high intensity sheeting, 3M CONFIDENTIAL	Erickson
___	___	R	81C	Erickson memo re Seibu's competitive review dated June 9, 1983, 3M CONFIDENTIAL (RDX 55)	Erickson
___	___	R	82	Meeting schedule, January 1984 (RDX 54)	Erickson
___	___	R	83	Erickson memo re Seibu submission dated May 23, 1984, (RDX 57)	Erickson

___	___	R	84	Phone report dated June 18, 1984 (RDX 59)	Erickson
___	___	R	85	Bond strength test procedure (RDX 10)	Erickson
___	___	R	86	Witness statement of Ronald Gehring	Gehring
___	___	R	87C	Index listing of raw material specifications, 3M CONFIDENTIAL	Gehring
___	___	R	88C	Purchased material specification for xylene, 3M CONFIDENTIAL	Gehring
___	___	R	89C	Index of RMTP, 3M CONFIDENTIAL	Gehring
___	___	R	90C	Raw material test procedure for xylol, 3M CONFIDENTIAL	Gehring
___	___	R	91C	Solution Testing Procedure, 3M CONFIDENTIAL	Gehring
___	___	R	92C	Index of solution test procedures, 3M CONFIDENTIAL	Gehring
___	___	R	93C	Laboratory testing procedure, 3M CONFIDENTIAL	Gehring
___	___	R	94C	Product Inspection Procedure, 3M CONFIDENTIAL	Gehring
___	___	R	95C	Index of product inspection procedures, 3M CONFIDENTIAL	Gehring
___	___	R	96C	Product standard for xylol cushion coat, 3M CONFIDENTIAL	Gehring
___	___	R	97C	Process standard, 3M CONFIDENTIAL	Gehring
___	___	R	98C	Divisional test method, 3M CONFIDENTIAL	Gehring
___	___	R	99C	Index of division test methods, 3M CONFIDENTIAL	Gehring
___	___	R	100C	Calibrating/operating procedures, 3M CONFIDENTIAL	Gehring
___	___	R	101C	Index of calibrating/operating procedures, 3M CONFIDENTIAL	Gehring
___	___	R	102C	Weathering procedure specification, 3M CONFIDENTIAL	Gehring
___	___	R	103C	Index of weathering procedure specifications, 3M CONFIDENTIAL	Gehring

___	___	R	104	Witness statement of Velmar Voves	Voves
___	___	R	105	Summary of direct competition bidding on government agency contracts awarded to Seibulite, (RDX 110)	Voves
___	___	R	106C	Engineer grade price trends from 1972 3M CONFIDENTIAL	Voves
___	___	R	107C	Graph of engineer grade price history 3M CONFIDENTIAL	Voves
___	___	R	108	History of competitive engineer grade pricing (update)	Voves
___	___	R	109	3M high intensity sales price, 1975 to 1987	Voves
___	___	R	110C	3M high intensity v. 3M engineer grade price comparison, 1975 to 1987, 3M CONFIDENTIAL	Voves
___	___	R	111	Respondents' Responses to Complainant's Requests for Admissions (first set)	
___	___	R	112	Respondents' Objections and Answers to Complainant's Second Set of Requests for Admissions	
___	___	R	113	Respondents' Responses to Complainant's Third Set of Requests for Admissions	
___	___	R	114C	Respondents' Objections and Answers to Complainant's Second Set of Interrogaries to Respondents, SEIBU CONFIDENTIAL	
___	___	R	115C	Respondents' Response to Complainant's Fourth Set of Interrogatories, SEIBU CONFIDENTIAL	
___	___	R	116	Respondents' Supplemental Answer to Complainant's Interrogatory No. 93	
___	___	R	117	Complaint in West Virginia Department of Highways v. Mitsubishi International Corporation, Seibulite of America, Inc. and Seibu Polymer Chemical Company, Ltd., certified copy.	Chapman
___	___	R	118	Complaint in State of North Carolina v. Mitsubishi International Corporation and Seibu Polymer Chemical Co., Ltd.	Chapman

___	___	R	119C	Seibulite inventory report for December 1987, SEIBU CONFIDENTIAL	Chapman
___	___	R	120	Organizational chart of Seibulite International, Inc. (CDX 1)	Chapman
___	___	R	121C	Respondents' Responses to Complainant's Interrogatories (first set), SEIBU CONFIDENTIAL (CDX 2)	Chapman
___	___	R	122C	Seibulite sales forecasts SEIBU CONFIDENTIAL (CDX 3)	Chapman
___	___	R	123C	CONFIDENTIAL Attachment 1 to Response, imports by Seibulite International (CDX 4) SEIBU CONFIDENTIAL	Chapman
___	___	R	124C	Respondents' Responses to the First Set of Interrogatories of the Commission Investigative Staff to Respondents SEIBU CONFIDENTIAL (CDX 5)	
___	___	R	125C	Seibu sales figures for 1985 and 1986 SEIBU CONFIDENTIAL (CDX 6)	Chapman
___	___	R	126C	Seibulite sales figures 1985, 1986 and 1987, SEIBU CONFIDENTIAL (CDX 7)	Chapman
___	___	R	127C	Seibulite inventory records SEIBU CONFIDENTIAL (CDX 8)	Chapman
___	___	R	128C	ULG Production figures (Tochigi) for 1985 and 1986, SEIBU CONFIDENTIAL (CDX 9)	Chapman
___	___	R	129C	Document re production at Tochigi SEIBU CONFIDENTIAL (CDX 10)	Chapman
___	___	R	130C	Chapman memo re monthly special dated November 13, 1986, SEIBU CONFIDENTIAL (CDX 11)	Chapman
___	___	R	131	Seibulite price lists (CDX 12)	Chapman
___	___	R	132C	Telexes re Illinois bid, SEIBU CONFIDENTIAL (CDX 13)	Chapman
___	___	R	133C	Correspondence between Seibulite and Springfield Consulting Group (last 3 pages SEIBU CONFIDENTIAL) (CDX 14)	Chapman
___	___	R	134C	Chapman letter to Springfield Consulting Group SEIBU CONFIDENTIAL (CDX 15)	Chapman

___	___	R	135C	Chapman letter to Rhode Island Dept. of Transportation SEIBU CONFIDENTIAL (CDX 16)	Chapman
___	___	R	136C	Eastern Regional Activity Report SEIBU CONFIDENTIAL (CDX 17)	Chapman
___	___	R	137C	Certified translation of CDX 20 - Physical Properties of Binder I, Part V, progress report on testing, dated 11/20/84 SEIBU CONFIDENTIAL	Kobayashi
___	___	R	138C	Certified translation of CDX 21 - Physical Properties of Binder I, Part IV, progress report on testing dated 11/16/84, SEIBU CONFIDENTIAL	Kobayashi
___	___	R	139C	Emersion test of McGrath Patent Example May 31, 1984, SEIBU CONFIDENTIAL (CDX 22)	Kobayashi
___	___	R	140	Test report on Examples 1 and 11 of McGrath dated October 23, 1987 (CDX 23)	Kobayashi
___	___	R	141	Kobayashi sketch (CDX 24)	Kobayashi
___	___	R	142	Adhesion test - razor blade test dated May 10, 1985 (CDX 25)	Kobayashi
___	___	R	143	Kobayashi sketch of knife breaking test (CDX 26)	Kobayashi
___	___	R	144	Kobayashi letter to Erickson dated February 12, 1985 (CDX 27)	Kobayashi
___	___	R	145	Erickson letter to Kobayashi dated April 2, 1985 (CDX 28)	Kobayashi
___	___	R	146	Kobayashi letter to Erickson dated June 27, 1985 (CDX 29)	Kobayashi
___	___	R	147	Erickson letter to Kobayashi dated September 26, 1985 (CDX 30)	Kobayashi
___	___	R	148	Erickson letter to Kobayashi dated October 15, 1984 (CDX 31)	Kobayashi
___	___	R	149C	Certified translation of CDX 34 - Report on research and development of HI reflective sheet dated October 8, 1981 SEIBU CONFIDENTIAL	Kobayashi
___	___	R	150C	Certified translation of CDX 35 - document re development of HI dated January 16, 1981, SEIBU CONFIDENTIAL	Kobayashi

___	___	R	151	Kobayashi sketch (CDX 36)	Kobayashi
___	___	R	152C	Hi process drawings (CDX 44) SEIBU CONFIDENTIAL	Kobayashi
___	___	R	153C	Certified translation of CDX 46 re Ultralite production capacity dated 9/22/87, SEIBU CONFIDENTIAL	Kobayashi
___	___	R	154C	Correspondence between Kojima and Fritsch dated October 20, 1979, with opinions on high intensity, SEIBU CONFIDENTIAL (CDX 47)	Kobayashi
___	___	R	155C	Certified translation of CDX 48 - HI Development status report dated June 1981, SEIBU CONFIDENTIAL	Kobayashi
___	___	R	156C	Certified translation of CDX 49 - document re marketing and production of ULG and SEG dated February 1986, SEIBU CONFIDENTIAL	Kobayashi
___	___	R	157C	Certified translation of CDX 50 - Future policy regarding the McGrath patent SEIBU CONFIDENTIAL	Kobayashi
___	___	R	158C	Seibu HI reflective sheeting - process dated November 1981, SEIBU CONFIDENTIAL (CDX 51)	Kobayashi
___	___	R	159C	Certified translation of CDX 52 - adhesion tests dated February 16, 1984 SEIBU CONFIDENTIAL	Kobayashi
___	___	R	160C	Certified translation of CDX 53 - document entitled questions, SEIBU CONFIDENTIAL	Kobayashi
___	___	R	161C	Ultralite Grade past bid information provided by Seibu, SEIBU CONFIDENTIAL (CDX 54)	Chapman
___	___	R	162	Publication, "Competition is alive and well" dated March 1986 (CDX 55).	Chapman
___	___	R	163C	City of Arlington, Texas, purchase order dated 8/10/87 SEIBU CONFIDENTIAL (CDX 56)	Chapman
___	___	R	164	Article, "Seibulite delays Opening of Plant", The Irish Times, 8/8/87	
___	___	R	165	Kobayashi letter to Erickson dated December 5, 1984	Kobayashi
___	___	R	166	Erickson letter to Kobayashi dated January 7, 1985	Kobayashi

___	___	R	167	Kobayashi letter to Erickson dated December 26, 1985	Kobayashi
___	___	R	168C	Certified translation of Bates 9497-9509 - Further Progress on HI dated January 11, 1982, SEIBU CONFIDENTIAL	Kobayashi
___	___	R	169C	Certified translation of Bates 9482-9496 - HI Development Progress Report dated November 2, 1982, SEIBU CONFIDENTIAL	Kobayashi
___	___	R	170C	Drawing Bates 523 - model of delamination SEIBU CONFIDENTIAL	Kobayashi
___	___	R	171C	Sectional drawing of ULG - Bates 522 SEIBU CONFIDENTIAL	Kobayashi
___	___	R	172C	Certified translation of Bates 15903-15904 - Review of Public Disclosure of Patent dated 11-14-83, SEIBU CONFIDENTIAL	Kobayashi
___	___	R	173C	Certified translation of Bates 15899-15902 - Consideration (Countermeasure) on 3M dated February 13, 1984, SEIBU CONFIDENTIAL	Kobayashi
___	___	R	174C	Certified translation of Bates 9759 - Report No. 1 by Mr. Kobayashi dated January 19, 1984, SEIBU CONFIDENTIAL	Kobayashi
___	___	R	175C	Certified translation of Bates 15796-15805 - Regarding Binders for HI by Kobayashi dated March 26, 1984, SEIBU CONFIDENTIAL	Kobayashi
___	___	R	176C	Report on heat shrinkage test dated April 26, 1984, SEIBU CONFIDENTIAL	Kobayashi
___	___	R	177C	Certified copy of Bates 12967-12969 Binder I, Test Report 3, dated October 29, 1984, SEIBU CONFIDENTIAL	Kobayashi
___	___	R	178C	Telex from Kawabe dated March 4, 1985 SEIBU CONFIDENTIAL	Kobayashi
___	___	R	179C	Notes from meeting May 13-15 BDF/SPC, SEIBU CONFIDENTIAL	Kobayashi
___	___	R	180	Certified copy of Austrian Opposition filing by Beiersdorf	
___	___	R	181	Certified copy of Austrian decision re opposition with translation	

___	___	R	182C	Bates 15729-15744 - Seibu document re history of Seibu, dated May 29, 1984, SEIBU CONFIDENTIAL	Kobayashi
___	___	R	183	Graph re peel tests prepared by Dr. DeVries (RDX 146)	DeVries
___	___	R	184	United States Patent Eagon 4,0923,889, art cited in Miyata U.S. patent 4,653,854	
___	___	R	185	United States Patent Holmen 3,836,277 art cited in Miyata U.S. patent 4,653,854	
___	___	R	186	United States Patent Rideout 3,418,896 art cited in Miyata U.S. patent 4,653,854	
___	___	R	187	United Kingdom patent 1,036,392, art cited in Miyata U.S. patent 4,653,854	
___	___	R	188C	Bates 9719-9726 - HI Test Process Conditions, dated March 22, 1984, SEIBU CONFIDENTIAL	Kobayashi
___	___	R	189	United States Patent Drew 2,410,053, rebutting respondents' argument that the statement in McKenzie that the binder may have thermosetting constituents means that the binder must be cured and becomes infusible and insoluble and that curing will take place after thermoforming	
___	___	R	190	Rebuttal Witness Statement of Wallace K. Bingham rebutting Covert's deposition testimony that the binder in McKenzie type high intensity sheeting had thermosetting constituents and was cured	Bingham
___	___	R	191	Rebuttal Witness Statement of William C. Covert correcting Covert's deposition testimony that the binder in McKenzie type high intensity sheeting had thermosetting constituents and was cured	Covert
___	___	R	192	Stipulations between the parties	
___	___	R	193	Curriculum vitae of Dr. K. L. DeVries	DeVries
___	___	R	194	Sharpe, L., "Adhesive Bonding", Machine Design, Septemer 11, 1969.	Sharpe

___	___	R	195C	Graph, CDX 101, SEIBU CONFIDENTIAL	Kobayashi
___	___	R	196C	Test result information, CDX 100, SEIBU CONFIDENTIAL	Kobayashi
___	___	R	197C	Documentation re Seibu testing	Kobayashi
___	___	R	198	Rebuttal witness statement of Raymond E. Grunzinger	Grunzinger
___	___	R	199C	3M summary report from Grunzinger re analysis of Seibu sheting dated March 13, 1986 (RDX 14) 3M CONFIDENTIAL	Grunzinger

UNITED STATES INTERNATIONAL TRADE COMMISSION
Washington, D.C.
Before Paul J. Luckern
Administrative Law Judge

In the Matter of	)	
	)	
CERTAIN HIGH INTENSITY RETROREFLECTIVE SHEETING	)	Investigation No. 337-TA-268

CERTIFICATE OF SERVICE

I hereby certify that the foregoing COMPLAINANT'S FINAL HEARING EXHIBIT LIST -- PHYSICAL EXHIBITS was served today, 20 February, 1988, upon the following:

Kenneth R. Mason, Secretary
U.S. International Trade Commission
500 E Street S.W.
Room 112
Washington, D.C. 20436
(Original and 6 copies)

The Hon. Paul J. Luckern
Administrative Law Judge
U.S. International Trade Commission
500 E Street S.W.
Room 213
Washington, D.C. 20436
(2 copies)

Marcia H. Sundeen, Esq.
Commission Investigative Attorney
Office of Unfair Import Investigations
U.S. International Trade Commission
500 E Street S.W.
Room 401M
Washington, D.C. 20436
(1 copy)

Counsel for Respondents

Edward M. Lebow
KELLEY DRYE & WARREN
Suite 600
1330 Connecticut Ave. N.W.
Washington, D. C. 20036
(1 copy)

Re: Investigation No. 337-TA-268
In the Matter of CERTAIN HIGH INTENSITY
RETROREFLECTIVE SHEETING

Counsel for Respondents

Stuart Lubitz
Paul L. Gardner
SPENSLEY HORN JUBAS & LUBITZ
1880 Century Park East
Suite 500
Los Angeles, CA 90067
(1 copy)

Albert L. Underhill

UNITED STATES INTERNATIONAL TRADE COMMISSION
WASHINGTON, D. C.

Before Paul J. Luckern
Administrative Law Judge

In the Matter of

CERTAIN HIGH INTENSITY
RETROREFLECTIVE SHEETING

Investigation No. 337-TA-268

COMPLAINANT'S FINAL HEARING EXHIBIT LIST

PHYSICAL EXHIBITS

Obj	Off	Rec	No.	Description and Purpose	Sponsoring Witness
___	___	R	1	Seibu Ultralite high intensity sheeting, encapsulated lens type, accused infringing product	
___	___	R	2	3M Scotchlite high intensity sheeting, encapsulated lens type, post 1982	
___	___	R	3	3M Scotchlite engineer grade sheeting, enclosed lens type	
___	___	R	4	3M demonstrative brochure, engineer grade/high intensity grade reflective sheeting samples	Richelsen
___	___	R	5	Stop sign (McKenzie sheeting) from Ramsey County	Erickson
___	___	R	6	Stop sign (McGrath sheeting) from Florida	Erickson
___	___	R	7	DeVries test sample (RDX 7)	DeVries
___	___	R	8	DeVries test sample (RDX 8)	DeVries
___	___	R	9	DeVries test sample (RDX 9)	DeVries
___	___	R	10	DeVries test sample (RDX 10)	DeVries
___	___	R	11	DeVries test sample (RDX 11)	DeVries

___	___	R	12	DeVries test sample (RDX 12)	DeVries
___	___	R	13	DeVries test sample (RDX 13)	DeVries
___	___	R	14	DeVries test sample (RDX 14) envelope	DeVries
___	___	R	15	Photographs of test equipment used by DeVries (RDX 141-145)	DeVries
___	___	R	16	Photographs of soluability tests run by Devries on ULG (RDX 147)	DeVries
___	___	R	17	Microphotographs of DeVries testing of ULG (RDX 148)	DeVries
___	___	R	18	DeVries test sample bottle	DeVries
___	___	R	19	DeVries test sample bottle	DeVries
___	___	R	20	DeVries test sample bottle	DeVries
___	___	R	21	DeVries test sample bottle	DeVries
___	___	R	22	DeVries test sample bottle	DeVries
___	___	R	23	DeVries test sample	DeVries
___	___	R	24	DeVries test sample envelope	DeVries
___	___	R	25	DeVries test sample	DeVries
___	___	R	26	DeVries test sample	DeVries
___	___	R	27	DeVries test sample	DeVries
___	___	R	28	DeVries test sample	DeVries
___	___	R	29	DeVries test sample envelope	DeVries
___	___	R	30	DeVries test sample	DeVries
___	___	R	31	DeVries test sample	DeVries
___	___	R	32	DeVries test sample	DeVries
___	___	R	33	DeVries test sample	DeVries
___	___	R	34	DeVries test sample	DeVries
___	___	R	35	DeVries test sample envelope	DeVries
___	___	R	36	DeVries test sample	DeVries

___	___	R	37	DeVries test sample	DeVries
___	___	R	38	DeVries test sample	DeVries
___	___	R	39	DeVries test sample envelope	DeVries
___	___	R	40	DeVries test sample	DeVries
___	___	R	41	DeVries test sample	DeVries
___	___	R	42	DeVries test sample	DeVries
___	___	R	43	DeVries test sample	DeVries
___	___	R	44	DeVries test sample envelope	DeVries
___	___	R	45	DeVries test sample	DeVries
___	___	R	46	DeVries test sample	DeVries
___	___	R	47	DeVries test sample	DeVries
___	___	R	48	DeVries test sample	DeVries
___	___	R	49	DeVries test sample envelope	DeVries
___	___	R	50	DeVries test sample	DeVries
___	___	R	51	DeVries test sample	DeVries
___	___	R	52	DeVries test sample	DeVries
___	___	R	53	DeVries test sample	DeVries
___	___	R	54	DeVries test sample	DeVries
___	___	R	55	DeVries test sample	DeVries
___	___	R	56	DeVries test sample	DeVries
___	___	R	57	DeVries test sample	DeVries
___	___	R	58	Transcript of Scott Chapman deposition taken November 10, 1987	
___	___	R	58AC	Transcript of Scott Chapman deposition taken November 10, 1987, CONFIDENTIAL PORTION	
___	___	R	59	Transcript of Scott Chapman deposition taken January 10, 1988	
___	___	R	60	Transcript of Sadao Kobayashi deposition taken November 11 - 13, 1987	

___	___	R	61	Transcript of Sadao Kobayashi deposition taken November 29 - December 1, 1987	
___	___	R	62	Transcript of Dave Ebihara deposition taken January 11, 1988	
___	___	R	63	Blowup chart of Claim 1 of McGrath	
___	___	R	64	Blowup chart of McGrath drawings	
___	___	R	65	Blowup chart of Gebhard drawings	
___	___	R	66	Blowup chart of Palmquist '680 drawings	
___	___	R	67	Blowup chart of McKenzie drawings	
___	___	R	68	Blowup chart of Seibulite Ultralite construction from Seibulite brochure	
___	___	R	69	Blowup of Columns 1 and 2 of McGrath patent	DeVries
___	___	R	70	Videotape of tests of Seibu materials	DeVries
___	___	R	71	DeVries test sample on Seibu materials	DeVries
___	___	R	72	DeVries test sample on Seibu materials	DeVries
___	___	R	73	DeVries test sample on Seibu materials	DeVries
___	___	R	74	DeVries test sample on Seibu materials	DeVries
___	___	R	75	DeVries test sample on Seibu materials	DeVries
___	___	R	76	DeVries solubility test sample on Seibu sheeting (bottles)	DeVries
___	___	R	77	Microphotograph of Seibu materials	DeVries
___	___	R	78	Sample of Seibu materials used for microphotograph	DeVries
___	___	R	79	Solubility tests on McGrath high intensity materials	DeVries
___	___	R	80	Photographs of tests on McGrath high intensity materials	DeVries
___	___	R	81	DeVries test sample on McGrath high intensity materials.	DeVries

___	___	R	82	DeVries test sample on McGrath high intensity materials.	DeVries
___	___	R	83	DeVries test sample on McGrath high intensity materials.	DeVries
___	___	R	84	DeVries test sample on McGrath high intensity materials.	DeVries
___	___	R	85	Bingham sketch of enclosed lens layers	Bingham
___	___	R	86	DeVries sketch re interphase adhesion	DeVries
___	___	R	87C	Figures re Seibulite inventory SEIBU CONFIDENTIAL	Chapman
___	___	R	88	Kobayashi sketch re failure occurrences	Kobayashi
___	___	R	89	Kobayashi sketch re test samples	Kobayashi
___	___	R	90	Kobayashi sketch re test samples	Kobayashi
___	___	R	91	Kobayashi sketch re 180 degree peel test	Kobayashi
___	___	R	92	Kobayashi sketch re tests done beginning in July 1987	Kobayashi
___	___	R	93	Tamte sketch re McGrath and Lemelson	Tamte

UNITED STATES INTERNATIONAL TRADE COMMISSION
Washington, D.C.
Before Paul J. Luckern
Administrative Law Judge

In the Matter of	)	
	)	
CERTAIN HIGH INTENSITY RETROREFLECTIVE SHEETING	)	Investigation No. 337-TA-268

CERTIFICATE OF SERVICE

I hereby certify that the foregoing COMPLAINANT'S FINAL HEARING EXHIBIT LIST -- DOCUMENTARY EXHIBITS was served today, 20 February, 1988, upon the following:

Kenneth R. Mason, Secretary
U.S. International Trade Commission
500 E Street S.W.
Room 112
Washington, D.C. 20436
(Original and 6 copies)

The Hon. Paul J. Luckern
Administrative Law Judge
U.S. International Trade Commission
500 E Street S.W.
Room 213
Washington, D.C. 20436
(2 copies)

Marcia H. Sundeen, Esq.
Commission Investigative Attorney
Office of Unfair Import Investigations
U.S. International Trade Commission
500 E Street S.W.
Room 401M
Washington, D.C. 20436
(1 copy)

Counsel for Respondents

Edward M. Lebow
KELLEY DRYE & WARREN
Suite 600
1330 Connecticut Ave. N.W.
Washington, D. C. 20036
(1 copy)

Re: Investigation No. 337-TA-268
In the Matter of CERTAIN HIGH INTENSITY
RETROREFLECTIVE SHEETING

Counsel for Respondents

Stuart Lubitz
Paul L. Gardner
SPENSLEY HORN JUBAS & LUBITZ
1880 Century Park East
Suite 500
Los Angeles, CA 90067
(1 copy)

Albert L. Underhill

ALJ Exhibit List

ALJ1 - Kobayashi February 4, 1988 Deposition Transcript

UNITED STATES INTERNATIONAL TRADE COMMISSION
WASHINGTON, D. C.

Before Paul J. Luckern
Administrative Law Judge

In the Matter of CERTAIN HIGH INTENSITY RETROREFLECTIVE SHEETING	Investigation No. 337-TA-268

RESPONDENTS' FINAL EXHIBIT LIST

I.

RESPONDENTS' DOCUMENTARY EXHIBITS

EXHIBIT NUMBER*	STATUS	SPONSOR	TITLE
RX-1C (3M)	Admitted	McGrath	McGrath invention disclosure; Form 3168-E, Record of Invention No. 8 dated September 18, 1973; Subject: Radiation Curable High Intensity Sheeting.
RX-2C (3M)	Admitted	Tamte	Letter dated June 11, 1974 from R. R. Tamte to A. Schwartz; Re: Preliminary patentability search, McGrath, F. N. 29,024.

*(PARTY CLAIMING CONFIDENTIAL STATUS)

EXHIBIT NUMBER*	STATUS	SPONSOR	TITLE
RX-3C (3M)	Admitted	Tamte	Letter dated June 27, 1974 from L. Allahut to R. R. Tamte; Re: Preliminary Patentability Search McGrath, F. N. 29,024.
RX-4	Admitted	Smook	Patent Office action dated June 25, 1976 in McGrath patent application Serial No. 658,284.
RX-5	Admitted	Smook	Amendment dated September 23, 1976 in McGrath patent application Serial No. 658,284.
RX-6	Admitted	Smook	Amendment Under Rule 312 dated January 17, 1977 in McGrath patent application. Serial No. 658,284.
RX-7	Admitted	Tamte	List of patents prosecuted by Mr. Roger Tamte.
RX-8C (3M)	Admitted	Covert (by deposition)	Drawing by William C. Covert made December 9, 1987 entitled "ENGINEER GRADE SCOTCHLITE BRAND REFLECTIVE SHEETING, SOLD IN U.S. BY 3M PRIOR TO 1974."
RX-9C (Seibu)	Objection sustained	Kobayashi	Table I identifying composition of Seibu enclosed lens sheeting.

(PARTY CLAIMING CONFIDENTIAL STATUS)

EXHIBIT NUMBER*	STATUS	SPONSOR	TITLE
RX-10C (Seibu)	Objection sustained	Kobayashi	Figures 1-4 of drawings entitled "Preparation of Seibu Enclosed Lens Sheeting-1973."
RX-11C (Seibu)	Objection sustained	Kobayashi	Figures 5 and 6 of drawings entitled "Preparation of Seibu Enclosed Lens Sheeting-1973."
RX-12C (Seibu)	Objection sustained	Kobayashi	Figures 7, 8 and 9 of drawings entitled "Preparation of Seibu Enclosed Lens Sheeting-1973."
RX-13C (Seibu)	Admitted	Kobayashi	Figures 1 and 2 of drawings entitled "Preparation of Seibu Encapsulated Lens Sheeting-ULTRALITE."
RX-14C (Seibu)	Admitted	Kobayashi	Figures 3 and 4 of drawings entitled "Preparation of Seibu Encapsulated Lens Sheeting-ULTRALITE."
RX-15C (Seibu)	Admitted	Kobayashi	Figures 5, 6 and 7 of drawings entitled "Preparation of Seibu Encapsulated Lens Sheeting-ULTRALITE."
RX-16C (Seibu)	Admitted	Ebihara	Chart showing the production limits of ULTRALITE sheeting
RX-17C (Seibu)	Admitted	Ebihara	Chart showing ULTRALITE sales in 1987

(PARTY CLAIMING CONFIDENTIAL STATUS)

EXHIBIT NUMBER*	STATUS	SPONSOR	TITLE
RX-18	Admitted	Stipulation	Complainant's price list reflecting May 15, 1987 and October 1, 1987 prices for identical products.
RX-19	Admitted	Kobayashi	Document dated August 10, 1984 by Dr. E. Dinne entitled "Translation" (handwritten notes from January 1984 Tokyo meeting).
RX-20	Admitted	Kobayashi	Letter dated December 5, 1984 from S. Kobayashi to R. L. Erickson.
RX-21	Admitted	Kobayashi	Letter dated January 7, 1985 from R. L. Erickson to S. Kobayashi.
RX-22	Admitted	Kobayashi	Letter dated December 26, 1985 from S. Kobayashi to R. L. Erickson (and 1 page enclosure thereto entitled "McGrath (U.S. 4,025,159) Cellular Retroreflective Sheeting Cross-Section").
RX-23	Admitted	Kobayashi	Document dated April 26, 1984 entitled "Report on Heat Shrinkage Test".
RX-24	Admitted	Kobayashi	Document dated May 10, 1984 entitled "Adhesion Test - Razor Blade Test."
RX-25C (3M)	Admitted	Grunzinger	Pages from 3M Notebook 66365.

(PARTY CLAIMING CONFIDENTIAL STATUS)

EXHIBIT NUMBER*	STATUS	SPONSOR	TITLE
RX-26C (3M)	Admitted	Grunzinger	Pages from 3M Notebook 68498.
RX-27C (3M)	Admitted	Grunzinger	Pages from 3M Notebook 66365.
RX-28C (3M)	Admitted	Grunzinger	Pages from 3M Notebook 68498.
RX-29C (3M)	Admitted	Grunzinger	Note entitled "Seibulite High Intensity Type Sheeting Analysis."
RX-30C (3M)	Admitted	Grunzinger	Memo dated August 6, 1985 entitled "Data Analysis of Ultralite Bead Bond Simulation."
RX-31C (3M)	Admitted	Erickson	Memo dated June 9, 1983 entitled "Seibu's Competitive Review."
RX-32C (3M)	Admitted	Grunzinger	3M Technical Report Summary for the period July-December 1985.
RX-33C (3M)	Admitted	Erickson	Document entitled "Japan Trip-January, 1984 -R. L. Erickson."
RX-34C (Seibu)	Admitted	Kobayashi	Report dated February 16, 1984 entitled "Adhesion Strength Test" (in Japanese).

(PARTY CLAIMING CONFIDENTIAL STATUS)

EXHIBIT NUMBER*	STATUS	SPONSOR	TITLE
RX-35C (Seibu)	¶¶1-19&31-42 admitted; ¶¶20-30 objection sustained	Kobayashi	Witness statement of Sadao Kobayashi.
RX-36C (Seibu)	¶¶1-4&6-7 admitted; ¶5 objection sustained	Ebihara	Witness statement of Hidehiko Ebihara.
RX-37	Admitted	Sharpe	Witness statement of Louis H. Sharpe.
RX-38C (Seibu)	Admitted	Chapman	Witness statement of Scott N. Chapman.
RX-39	Admitted	Sharpe	Rebuttal witness statement of Louis H. Sharpe.
RX-40 (Seibu)	Admitted	Kobayashi	Rebuttal witness statement of Sadao Kobayashi.
RX-41C (3M)	Admitted	Grunzinger	Memo dated August 4, 1983 regarding "Acrylic-Urethane Cushion Cost."
RX-42C (3M)	Admitted	Stipulation	Report dated January 6, 1988 showing 3M's sales of retroreflective sheeting.
RX-43C (3M)	Admitted	Bingham	Page 48 from 3M Technical Notebook No. 30328.
RX-44C (3M)	Admitted	Erickson	Technical Report, Analysis of Beiersdorf Encapsulated Lens

---

(PARTY CLAIMING CONFIDENTIAL STATUS)

EXHIBIT NUMBER*	STATUS	SPONSOR	TITLE
			Retroreflective Sheeting Sample.
RX-45C (Seibu)	Admitted	DeVries	Respondents' Responses to Complainant's Interrogatories Nos. 16 and 17.
RX-46C (Seibu)	Admitted	DeVries	Letter dated November 20, 1987 from P.L. Gardner to A.L. Underhill; Re: 3M v. Seibu.
RX-47C (Seibu)	Admitted	DeVries	Letter dated January 7, 1988 from A.L. Underhill to P.L. Gardner; Re: Investigation No. 337-TA-268, In the Matter of Certain High Intensity Retroreflective Sheeting.
RX-48C (Seibu)	Admitted	DeVries	Letter dated January 7, 1988 from A.L. Underhill to P.L. Gardner; Re: Investigation No. 337-TA-268, In the Matter of Certain High Intensity Retroreflective Sheeting.
RX-49C (Seibu)	Admitted	Smook	Table 1 - 180° Peel Test Data.
RX-50C (Seibu)	Admitted	Smook	Graph - Relationship Between Residual Solvent and 180° Peel Strength (0 day).
RX-51C (Seibu)	Admitted	Smook	Graph - Relationship Between Residual Solvent (approximate) and 180°

(PARTY CLAIMING CONFIDENTIAL STATUS)

EXHIBIT NUMBER*	STATUS	SPONSOR	TITLE
			Peel Strength (Aging at 50°C - 7th day).
RX-52C (Seibu)	Admitted	Smook	Graph - 180° Peel Strength (11%).
RX-53C (Seibu)	Admitted	Smook	Graph - 180° Peel Strength (8.8%).
RX-54C (Seibu)	Admitted	Smook	Graph - 180° Peel Strength (4.8%).
RX-55C (Seibu)	Admitted	Smook	Graph - 180° Peel Strength (2.73%).
RX-56C (Seibu)	Admitted	Smook	Graph - 180° Peel Strength (1.55%).
RX-57	Admitted	Smook	Curriculum Vitae of Malcolm A. Smook.
RX-58	Admitted	Sharpe	Curriculum Vitae of Dr. Louis H. Sharpe.
RX-59C (3M)	Admitted	Grunzinger	Traffic Control Materials Division, Semiannual Report - Second Half, 1985.
RX-60C (3M)	Admitted	Grunzinger	Memo dated February 18, 1986 from J. LaPerre to R. Richelsen; Subject: Seibu Infringement.

(PARTY CLAIMING CONFIDENTIAL STATUS)

II.

RESPONDENTS' PHYSICAL EXHIBITS

EXHIBIT NUMBER*	STATUS	SPONSOR	TITLE
RPX-1	Admitted	Smook	Blowup of claim 1 of McGrath Patent.
RPX-2	Admitted	Smook	Blowup of language in Col. 2 in McGrath patent.
RPX-3	Admitted	Smook	Blowup of dependent claims 3-5 and 7 of McGrath Patent.
RPX-4	Admitted	Smook	Blowup of McGrath patent drawings.
RPX-5	Admitted	Smook	Blowup of language from columns 5 and 7 of the McGrath patent.
RPX-6	Admitted	Smook	Blowup of page 2 of "Amendment" from prosecution history of McGrath application, highlighted.
RPX-7	Admitted	Smook	Blowup of page 3 of "Amendment" from prosecution history of McGrath application, highlighted.
RPX-8	Admitted	Smook	Blowup of page 4 of "Amendment" from prosecution history of McGrath application, highlighted.

(PARTY CLAIMING CONFIDENTIAL STATUS)

EXHIBIT NUMBER*	STATUS	SPONSOR	TITLE
RPX-10	Admitted	Smook	Blowup of pages 5 and 6 of "Amendment" from prosecution history of McGrath application, highlighted.
RPX-12	Admitted	Smook	Blowup of page 3 of "Amendment Under Rule 312" from prosecution history, highlighted.
RPX-13	Admitted	Smook	Blowup of illustration entitled "Lemelson Patent 3,676,249" (Number 1).
RPX-14	Admitted	Smook	Blowup of illustration entitled "Lemelson Patent 3,676,249" (Number 2).
RPX-15	Admitted	Smook	Blowup of illustration entitled "Lemelson Patent 3,676,249" (Number 3).
RPX-16	Admitted	Smook	Blowup of illustration entitled "Lemelson Patent 3,676,249" (Number 4).
RPX-18	Admitted	Smook	Blowup of illustration entitled "Frigstad Patent" (Number 1).
RPX-19	Admitted	Smook	Blowup of illustration entitled "Frigstad Patent" (Number 2).
RPX-24	Admitted	Smook	Blowup of drawings from McKenzie Patent 3,190,178.

(PARTY CLAIMING CONFIDENTIAL STATUS)

EXHIBIT NUMBER*	STATUS	SPONSOR	TITLE
RPX-25	Admitted	Smook	Blowup of important text from McKenzie Patent 3,190,178.
RPX-26	Admitted	McGrath	Blowup of invention disclosure of March 29, 1974, highlighted.
RPX-27	Admitted	Tamte	Blowup of preliminary search report letter of June 27, 1974, highlighted.
RPX-28	Objection sustained	Smook or Kobayashi	Blowup of illustration of 1974-vintage Seibu enclosed lens sheeting.
RPX-29	Admitted	Smook	Blowup of chart illustrating McGrath process and Ultralite process of manufacture.
RPX-30	Admitted	Smook	Blowup of chart illustrating Ultralite structure.
RPX-31	Admitted	Smook	Blowup of Tamte search request dated June 11, 1974.
RPX-32	Admitted	McKenzie (by deposition)	McKenzie deposition transcript.
RPX-33	Admitted	Covert (by deposition)	Covert deposition transcript.
RPX-34	Admitted	Frigstad (by deposition)	Frigstad deposition transcript.

(PARTY CLAIMING CONFIDENTIAL STATUS)

EXHIBIT NUMBER*	STATUS	SPONSOR	TITLE
RPX-41	Admitted	Smook	Blowup of chart comparing McGrath sheeting with McKenzie, Palmquist and Gebhard prior art sheeting.
RPX-42	Admitted	McGrath	List of Ingredients from CX-65C pages 22-24.
RPX-43	Admitted	McGrath	Representation of the last paragraph of column 4, U.S. Patent No. 4,025,159.
RPX-44	Admitted		uncured 3M sheeting
RPX-45	Admitted	Erickson	Razor Blade Test per Dr. Erickson
RPX-46	Admitted	Erickson	Drawing of Beiersdorf Sample Analyzed in 1983.
RPX-47	Admitted	Erickson	List of Materials Needed for Razor Blade Test.
RPX-48	Admitted	DeVries	Tests on Seibu ULG.
RPX-49	Admitted	DeVries	Videocassette - 3M Razor Blade Test.

(PARTY CLAIMING CONFIDENTIAL STATUS)

EXHIBIT NUMBER*	STATUS	SPONSOR	TITLE
RPX-59	Admitted	Kobayashi	Respondents' counter-designations of the deposition of Sadao Kobayashi, Volume 3.

SEIBULITE INTERNATIONAL INC.
SEIBU POLYMER CHEMICAL INDUSTRY CO, LTD.

By their attorneys,

Dated: February 26, 1988

Stuart Lubitz
Paul L. Gardner
John P. Spitals
SPENSLEY HORN JUBAS & LUBITZ
1880 Century Park East
Fifth Floor
Los Angeles, California 90067
(213) 553-5050

Edward M. Lebow
KELLEY, DRYE & WARREN
1330 Connecticut Avenue
Suite 600
Washington, D.C. 20036
(202) 463-8333

(PARTY CLAIMING CONFIDENTIAL STATUS)

CERTIFICATE OF SERVICE

I hereby certify that the foregoing "Respondents' Final Exhibit List" was served by Federal Express, for next business day delivery*, on this 26th day of February, 1988, upon the following:

Kenneth R. Mason, Secretary
U.S. International Trade Commission
500 E Street, S.W.
Room 112
Washington, D.C. 20436
(original and 6 copies)

The Hon. Paul J. Luckern
Administrative Law Judge
U.S. International Trade Commission
500 E Street, S.W.
Room 213
Washington, D.C. 20436
(two copies)

Ms. Marcia H. Sundeen
1921 Park Road, N.W.
Washington, D.C. 20010
(one copy)
* Saturday delivery

Robert Edell, Esq.
Merchant, Gould, Smith, Edell,
Welter & Schmidt, P.A.
1600 Midwest Plaza Bldg.
801 Nicollet Mall
Minneapolis, Minnesota 55402
(one copy)
* Saturday delivery

Karen M. Efron

KAREN M. EFRON

UNITED STATES INTERNATIONAL TRADE COMMISSION
WASHINGTON, D. C.

Before Paul J. Luckern
Administrative Law Judge

In the Matter of

CERTAIN HIGH INTENSITY RETROREFLECTIVE SHEETING

Investigation No. 337-TA-268

COMPLAINANT'S FINAL HEARING EXHIBIT LIST

DOCUMENTARY EXHIBITS

Obj	Off	Rec	No.	Description and Purpose	Sponsoring Witness
___	___	R	1	United States Patent McGrath 4,025,159, patent-in-suit	
___	___	R	2	File History of United States Patent McGrath 4,025,159, patent-in-suit	
___	___	R	3	United States Patent Weber 3,140,340, art of record to patent-in-suit	
___	___	R	4	United States Patent McKenzie 3,190,178, art of record to patent-in-suit	
___	___	R	5	United States Patent Bassemir 3,558,387, art of record to patent-in-suit	
___	___	R	6	United States Patent Moore 3,681,167, art of record to patent-in-suit	
___	___	R	7	United States Patent Holmen 3,924,929, art of record to patent-in-suit	
___	___	R	8	United States Patent Lemelson 3,676,249, art relied on by respondents	
___	___	R	9	United States Patent Frigstad 3,472,730, art relied on by respondents	
___	___	R	10	United States Patent Palmquist 2,543,800, art relied on by respondents	
___	___	R	11	United States Patent Schwab 3,795,435, art relied on by respondents	
___	___	R	12	United States Patent Hendricks 2,956,904, art relied on by respondents	

___	___	R	13	United States Patent Miyata 4,653,854, patent assigned to Seibu	
___	___	R	14	File History of United States Patent Miyata 4,653,854, patent assigned by Seibu	
___	___	R	15	United States Patent Gebhard et al. 2,326,634, showing exposed lens structure	Richelsen
___	___	R	16	United States Patent Palmquist et al. 2,407,680, showing enclosed lens structure	Richelsen
___	___	R	17C	Witness statement of Raymond Richelsen 3M CONFIDENTIAL	Richelsen
___	___	R	18	1986 annual report of 3M	Richelsen
___	___	R	19	3M brochure, "The Brighter Way to Safer Roads"	Richelsen
___	___	R	20	3M brochure, "Introduction to Reflective Materials"	Richelsen
___	___	R	21	3M brochure, "Visible Signs of Success"	Richelsen
___	___	R	22C	Compilation of complaints on high intensity delamination 1975-1987, 3M CONFIDENTIAL	Richelsen
___	___	R	23	Warranty for 3M high intensity sheeting	Richelsen
___	___	R	24	3M product literature, high intensity grade samples (colored)	Richelsen
___	___	R	25	3M product literature, high intensity grade 3820 pre-printed barricade sheeting	Richelsen
___	___	R	26	3M product literature, high intensity grade 2820/3820 series	Richelsen
___	___	R	27	3M product literature, product bulletin 103 and attachment 1, encapsulated lens 2800/3800 system	Richelsen
___	___	R	28	3M product literature, product bulletin 102 and attachments 1-6, encapsulated lens sheeting	Richelsen
___	___	R	29	3M brochure, "Make construction work zones safer..."	Richelsen
___	___	R	30	3M benefits highlights	Richelsen

___	___	R	31C	3M capital expenditures and investment in equipment, 3M CONFIDENTIAL	Richelsen
___	___	R	32C	Authority for expenditure documents for equipment and plant modifications 1983-1987, 3M CONFIDENTIAL	Richelsen
___	___	R	33C	Capitalization Value and Expected Equipment Expense, 3M CONFIDENTIAL	Richelsen
___	___	R	34C	Representative United States Suppliers to 3M, 3M CONFIDENTIAL	Richelsen
___	___	R	35C	Sales history of 3M high intensity sheeting, dollars and square yards, 1979-1987, 3M CONFIDENTIAL	Richelsen
___	___	R	36C	3M engineer grade sales volume 3M CONFIDENTIAL	Richelsen
___	___	R	37C	3M high intensity advertising and merchandising purchases, 3M CONFIDENTIAL	Richelsen
___	___	R	38	3M brochure, "How to improve your motorists' vision at night"	Richelsen
___	___	R	39	3M brochure, "Your third grader will be an adult before this 3M high intensity sign shows its age"	Richelsen
___	___	R	40	3M brochure, "3M Traffic Control Materials dramatically improve a motorist's vision"	Richelsen
___	___	R	41	3M brochure, "The way some construction zones are marked really kills people"	Richelsen
___	___	R	42	Media schedule of print advertising 3M TCM	Richelsen
___	___	R	43C	3M profits from high intensity sheeting 1982-1987, 3M CONFIDENTIAL	Richelsen
___	___	R	44C	3M volume of production of high intensity sheeting 1982-1987, 3M CONFIDENTIAL	Richelsen
___	___	R	45C	3M domestic inventory of high intensity sheeting, 1982-1987, 3M CONFIDENTIAL	Richelsen
___	___	R	46C	3M estimates of sales of high intensity, 3M CONFIDENTIAL	Richelsen
___	___	R	47	3M's published price lists effective October 1, 1987, for high intensity sheeting	Richelsen

___	___	R	48	3M's published price lists effective October 1, 1986, for high intensity sheeting	Richelsen
___	___	R	49C	Price matching information, 3M CONFIDENTIAL	Richelsen
___	___	R	50	Witness statement of W. Karl Bingham	Bingham
___	___	R	51C	Reflective Products Division Release Memorandum No. 311 dated June 8, 1961, (RDX 116), 3M CONFIDENTIAL	Bingham
___	___	R	52C	3M Technical Report Summary dated April 15, 1965, (RDX 119), 3M CONFIDENTIAL	Bingham
___	___	R	53C	Reflective Product Division Factory Experiment No. RFE 745, (RDX 118), 3M CONFIDENTIAL	Bingham
___	___	R	54C	3M Technical Report Summary dated January 1968, (RDX 121), 3M CONFIDENTIAL	Bingham
___	___	R	55C	3M Technical Report Summary dated July 18, 1968, (RDX 122), 3M CONFIDENTIAL	Bingham
___	___	R	56C	3M Technical Report Summary dated July 24, 1969, (RDX 125), 3M CONFIDENTIAL	Bingham
___	___	R	57C	3M Technical Report Summary dated January 22, 1970, (RDX 127), 3M CONFIDENTIAL	Bingham
___	___	R	58C	Meeting Minutes dated March 18, 1971, (RDX 130), 3M CONFIDENTIAL	Bingham
___	___	R	59C	Meeting Minutes dated March 30, 1971, (RDX 131), 3M CONFIDENTIAL	Bingham
___	___	R	60C	Meeting Minutes dated August 25, 1971, (RDX 133), 3M CONFIDENTIAL	Bingham
___	___	R	61C	Meeting Minutes dated October 1, 1971, (RDX 134), 3M CONFIDENTIAL	Bingham
___	___	R	62C	Progress Report Second Half 1972 dated January 15, 1973, (RDX 117), 3M CONFIDENTIAL	Bingham
___	___	R	63	Witness statement of Joseph McGrath	McGrath
___	___	R	64C	Pages from McGrath notebook 27891 3M CONFIDENTIAL (RDX 36)	McGrath
___	___	R	65C	Pages from McGrath notebook 36745 3M CONFIDENTIAL (RDX 26)	McGrath

___	___	R	66C	Pages from McGrath notebook 38243 3M CONFIDENTIAL (RDX 27)	McGrath
___	___	R	67C	Pages from McGrath notebook 39756 3M CONFIDENTIAL (RDX 30)	McGrath
___	___	R	68C	Pages from McGrath notebook 41867 3M CONFIDENTIAL (RDX 31)	McGrath
___	___	R	69C	Pages from McGrath notebook 43688 3M CONFIDENTIAL	McGrath
___	___	R	70C	Pages from Hangge notebook 41857 3M CONFIDENTIAL	McGrath
___	___	R	71C	Pages from Johnson notebook 37757 and 41306, 3M CONFIDENTIAL	McGrath
___	___	R	72C	Pages from Johnson notebook 43473 3M CONFIDENTIAL	McGrath
___	___	R	73C	Log entries for weathering tests, 3M CONFIDENTIAL	McGrath
___	___	R	74C	Results of weathering tests, 3M CONFIDENTIAL	McGrath
___	___	R	75	Record of Invention dated March 29, 1974 (RDX 25)	McGrath
___	___	R	76	Assignment of McGrath patent	McGrath
___	___	R	77	Factory experiment documents dated 1974	McGrath
___	___	R	78C	Technical Summary Report dated November 24, 1980, 3M CONFIDENTIAL	McGrath
___	___	R	79	Witness Statement of Randall Erickson	Erickson
___	___	R	80C	3M R&D Investment for high intensity sheeting, 3M CONFIDENTIAL	Erickson
___	___	R	81C	Erickson memo re Seibu's competitive review dated June 9, 1983, 3M CONFIDENTIAL (RDX 55)	Erickson
___	___	R	82	Meeting schedule, January 1984 (RDX 54)	Erickson
___	___	R	83	Erickson memo re Seibu submission dated May 23, 1984, (RDX 57)	Erickson

___	___	R	84	Phone report dated June 18, 1984 (RDX 59)	Erickson
___	___	R	85	Bond strength test procedure (RDX 10)	Erickson
___	___	R	86	Witness statement of Ronald Gehring	Gehring
___	___	R	87C	Index listing of raw material specifications, 3M CONFIDENTIAL	Gehring
___	___	R	88C	Purchased material specification for xylene, 3M CONFIDENTIAL	Gehring
___	___	R	89C	Index of RMTP, 3M CONFIDENTIAL	Gehring
___	___	R	90C	Raw material test procedure for xylol, 3M CONFIDENTIAL	Gehring
___	___	R	91C	Solution Testing Procedure, 3M CONFIDENTIAL	Gehring
___	___	R	92C	Index of solution test procedures, 3M CONFIDENTIAL	Gehring
___	___	R	93C	Laboratory testing procedure, 3M CONFIDENTIAL	Gehring
___	___	R	94C	Product Inspection Procedure, 3M CONFIDENTIAL	Gehring
___	___	R	95C	Index of product inspection procedures, 3M CONFIDENTIAL	Gehring
___	___	R	96C	Product standard for xylol cushion coat, 3M CONFIDENTIAL	Gehring
___	___	R	97C	Process standard, 3M CONFIDENTIAL	Gehring
___	___	R	98C	Divisional test method, 3M CONFIDENTIAL	Gehring
___	___	R	99C	Index of division test methods, 3M CONFIDENTIAL	Gehring
___	___	R	100C	Calibrating/operating procedures, 3M CONFIDENTIAL	Gehring
___	___	R	101C	Index of calibrating/operating procedures, 3M CONFIDENTIAL	Gehring
___	___	R	102C	Weathering procedure specification, 3M CONFIDENTIAL	Gehring
___	___	R	103C	Index of weathering procedure specifications, 3M CONFIDENTIAL	Gehring

___	___	R	104	Witness statement of Velmar Voves	Voves
___	___	R	105	Summary of direct competition bidding on government agency contracts awarded to Seibulite, (RDX 110)	Voves
___	___	R	106C	Engineer grade price trends from 1972 3M CONFIDENTIAL	Voves
___	___	R	107C	Graph of engineer grade price history 3M CONFIDENTIAL	Voves
___	___	R	108	History of competitive engineer grade pricing (update)	Voves
___	___	R	109	3M high intensity sales price, 1975 to 1987	Voves
___	___	R	110C	3M high intensity v. 3M engineer grade price comparison, 1975 to 1987, 3M CONFIDENTIAL	Voves
___	___	R	111	Respondents' Responses to Complainant's Requests for Admissions (first set)	
___	___	R	112	Respondents' Objections and Answers to Complainant's Second Set of Requests for Admissions	
___	___	R	113	Respondents' Responses to Complainant's Third Set of Requests for Admissions	
___	___	R	114C	Respondents' Objections and Answers to Complainant's Second Set of Interrogaries to Respondents, SEIBU CONFIDENTIAL	
___	___	R	115C	Respondents' Response to Complainant's Fourth Set of Interrogatories, SEIBU CONFIDENTIAL	
___	___	R	116	Respondents' Supplemental Answer to Complainant's Interrogatory No. 93	
___	___	R	117	Complaint in West Virginia Department of Highways v. Mitsubishi International Corporation, Seibulite of America, Inc. and Seibu Polymer Chemical Company, Ltd., certified copy.	Chapman
___	___	R	118	Complaint in State of North Carolina v. Mitsubishi International Corporation and Seibu Polymer Chemical Co., Ltd.	Chapman

___	___	R	119C	Seibulite inventory report for December 1987, SEIBU CONFIDENTIAL	Chapman
___	___	R	120	Organizational chart of Seibulite International, Inc. (CDX 1)	Chapman
___	___	R	121C	Respondents' Responses to Complainant's Interrogatories (first set), SEIBU CONFIDENTIAL (CDX 2)	Chapman
___	___	R	122C	Seibulite sales forecasts SEIBU CONFIDENTIAL (CDX 3)	Chapman
___	___	R	123C	CONFIDENTIAL Attachment 1 to Response, imports by Seibulite International (CDX 4) SEIBU CONFIDENTIAL	Chapman
___	___	R	124C	Respondents' Responses to the First Set of Interrogatories of the Commission Investigative Staff to Respondents SEIBU CONFIDENTIAL (CDX 5)	
___	___	R	125C	Seibu sales figures for 1985 and 1986 SEIBU CONFIDENTIAL (CDX 6)	Chapman
___	___	R	126C	Seibulite sales figures 1985, 1986 and 1987, SEIBU CONFIDENTIAL (CDX 7)	Chapman
___	___	R	127C	Seibulite inventory records SEIBU CONFIDENTIAL (CDX 8)	Chapman
___	___	R	128C	ULG Production figures (Tochigi) for 1985 and 1986, SEIBU CONFIDENTIAL (CDX 9)	Chapman
___	___	R	129C	Document re production at Tochigi SEIBU CONFIDENTIAL (CDX 10)	Chapman
___	___	R	130C	Chapman memo re monthly special dated November 13, 1986, SEIBU CONFIDENTIAL (CDX 11)	Chapman
___	___	R	131	Seibulite price lists (CDX 12)	Chapman
___	___	R	132C	Telexes re Illinois bid, SEIBU CONFIDENTIAL (CDX 13)	Chapman
___	___	R	133C	Correspondence between Seibulite and Springfield Consulting Group (last 3 pages SEIBU CONFIDENTIAL) (CDX 14)	Chapman
___	___	R	134C	Chapman letter to Springfield Consulting Group SEIBU CONFIDENTIAL (CDX 15)	Chapman

___	___	R	135C	Chapman letter to Rhode Island Dept. of Transportation SEIBU CONFIDENTIAL (CDX 16)	Chapman
___	___	R	136C	Eastern Regional Activity Report SEIBU CONFIDENTIAL (CDX 17)	Chapman
___	___	R	137C	Certified translation of CDX 20 - Physical Properties of Binder I, Part V, progress report on testing, dated 11/20/84 SEIBU CONFIDENTIAL	Kobayashi
___	___	R	138C	Certified translation of CDX 21 - Physical Properties of Binder I, Part IV, progress report on testing dated 11/16/84, SEIBU CONFIDENTIAL	Kobayashi
___	___	R	139C	Emersion test of McGrath Patent Example May 31, 1984, SEIBU CONFIDENTIAL (CDX 22)	Kobayashi
___	___	R	140	Test report on Examples 1 and 11 of McGrath dated October 23, 1987 (CDX 23)	Kobayashi
___	___	R	141	Kobayashi sketch (CDX 24)	Kobayashi
___	___	R	142	Adhesion test - razor blade test dated May 10, 1985 (CDX 25)	Kobayashi
___	___	R	143	Kobayashi sketch of knife breaking test (CDX 26)	Kobayashi
___	___	R	144	Kobayashi letter to Erickson dated February 12, 1985 (CDX 27)	Kobayashi
___	___	R	145	Erickson letter to Kobayashi dated April 2, 1985 (CDX 28)	Kobayashi
___	___	R	146	Kobayashi letter to Erickson dated June 27, 1985 (CDX 29)	Kobayashi
___	___	R	147	Erickson letter to Kobayashi dated September 26, 1985 (CDX 30)	Kobayashi
___	___	R	148	Erickson letter to Kobayashi dated October 15, 1984 (CDX 31)	Kobayashi
___	___	R	149C	Certified translation of CDX 34 - Report on research and development of HI reflective sheet dated October 8, 1981 SEIBU CONFIDENTIAL	Kobayashi
___	___	R	150C	Certified translation of CDX 35 - document re development of HI dated January 16, 1981, SEIBU CONFIDENTIAL	Kobayashi

___	___	R	151	Kobayashi sketch (CDX 36)	Kobayashi
___	___	R	152C	Hi process drawings (CDX 44) SEIBU CONFIDENTIAL	Kobayashi
___	___	R	153C	Certified translation of CDX 46 re Ultralite production capacity dated 9/22/87, SEIBU CONFIDENTIAL	Kobayashi
___	___	R	154C	Correspondence between Kojima and Fritsch dated October 20, 1979, with opinions on high intensity, SEIBU CONFIDENTIAL (CDX 47)	Kobayashi
___	___	R	155C	Certified translation of CDX 48 - HI Development status report dated June 1981, SEIBU CONFIDENTIAL	Kobayashi
___	___	R	156C	Certified translation of CDX 49 - document re marketing and production of ULG and SEG dated February 1986, SEIBU CONFIDENTIAL	Kobayashi
___	___	R	157C	Certified translation of CDX 50 - Future policy regarding the McGrath patent SEIBU CONFIDENTIAL	Kobayashi
___	___	R	158C	Seibu HI reflective sheeting - process dated November 1981, SEIBU CONFIDENTIAL (CDX 51)	Kobayashi
___	___	R	159C	Certified translation of CDX 52 - adhesion tests dated February 16, 1984 SEIBU CONFIDENTIAL	Kobayashi
___	___	R	160C	Certified translation of CDX 53 - document entitled questions, SEIBU CONFIDENTIAL	Kobayashi
___	___	R	161C	Ultralite Grade past bid information provided by Seibu, SEIBU CONFIDENTIAL (CDX 54)	Chapman
___	___	R	162	Publication, "Competition is alive and well" dated March 1986 (CDX 55).	Chapman
___	___	R	163C	City of Arlington, Texas, purchase order dated 8/10/87 SEIBU CONFIDENTIAL (CDX 56)	Chapman
___	___	R	164	Article, "Seibulite delays Opening of Plant", The Irish Times, 8/8/87	
___	___	R	165	Kobayashi letter to Erickson dated December 5, 1984	Kobayashi
___	___	R	166	Erickson letter to Kobayashi dated January 7, 1985	Kobayashi

				December 26, 1985	
		R	168C	Certified translation of Bates 9497-9509 - Further Progress on HI dated January 11, 1982, SEIBU CONFIDENTIAL	Kobayashi
		R	169C	Certified translation of Bates 9482-9496 - HI Development Progress Report dated November 2, 1982, SEIBU CONFIDENTIAL	Kobayashi
		R	170C	Drawing Bates 523 - model of delamination SEIBU CONFIDENTIAL	Kobayashi
		R	171C	Sectional drawing of ULG - Bates 522 SEIBU CONFIDENTIAL	Kobayashi
		R	172C	Certified translation of Bates 15903-15904 - Review of Public Disclosure of Patent dated 11-14-83, SEIBU CONFIDENTIAL	Kobayashi
		R	173C	Certified translation of Bates 15899-15902 - Consideration (Countermeasure) on 3M dated February 13, 1984, SEIBU CONFIDENTIAL	Kobayashi
		R	174C	Certified translation of Bates 9759 - Report No. 1 by Mr. Kobayashi dated January 19, 1984, SEIBU CONFIDENTIAL	Kobayashi
		R	175C	Certified translation of Bates 15796-15805 - Regarding Binders for HI by Kobayashi dated March 26, 1984, SEIBU CONFIDENTIAL	Kobayashi
		R	176C	Report on heat shrinkage test dated April 26, 1984, SEIBU CONFIDENTIAL	Kobayashi
		R	177C	Certified copy of Bates 12967-12969 Binder I, Test Report 3, dated October 29, 1984, SEIBU CONFIDENTIAL	Kobayashi
		R	178C	Telex from Kawabe dated March 4, 1985 SEIBU CONFIDENTIAL	Kobayashi
		R	179C	Notes from meeting May 13-15 BDF/SPC, SEIBU CONFIDENTIAL	Kobayashi
		R	180	Certified copy of Austrian Opposition filing by Beiersdorf	
		R	181	Certified copy of Austrian decision re opposition with translation	

___	___	R	182C	Bates 15729-15744 - Seibu document re history of Seibu, dated May 29, 1984, SEIBU CONFIDENTIAL	Kobayashi
___	___	R	183	Graph re peel tests prepared by Dr. DeVries (RDX 146)	DeVries
___	___	R	184	United States Patent Eagon 4,0923,889, art cited in Miyata U.S. patent 4,653,854	
___	___	R	185	United States Patent Holmen 3,836,277 art cited in Miyata U.S. patent 4,653,854	
___	___	R	186	United States Patent Rideout 3,418,896 art cited in Miyata U.S. patent 4,653,854	
___	___	R	187	United Kingdom patent 1,036,392, art cited in Miyata U.S. patent 4,653,854	
___	___	R	188C	Bates 9719-9726 - HI Test Process Conditions, dated March 22, 1984, SEIBU CONFIDENTIAL	Kobayashi
___	___	R	189	United States Patent Drew 2,410,053, rebutting respondents' argument that the statement in McKenzie that the binder may have thermosetting constituents means that the binder must be cured and becomes infusible and insoluble and that curing will take place after thermoforming	
___	___	R	190	Rebuttal Witness Statement of Wallace K. Bingham rebutting Covert's deposition testimony that the binder in McKenzie type high intensity sheeting had thermosetting constituents and was cured	Bingham
___	___	R	191	Rebuttal Witness Statement of William C. Covert correcting Covert's deposition testimony that the binder in McKenzie type high intensity sheeting had thermosetting constituents and was cured	Covert
___	___	R	192	Stipulations between the parties	
___	___	R	193	Curriculum vitae of Dr. K. L. DeVries	DeVries
___	___	R	194	Sharpe, L., "Adhesive Bonding", Machine Design, Septemer 11, 1969.	Sharpe

___	___	R	195C	Graph, CDX 101, SEIBU CONFIDENTIAL	Kobayashi
___	___	R	196C	Test result information, CDX 100, SEIBU CONFIDENTIAL	Kobayashi
___	___	R	197C	Documentation re Seibu testing	Kobayashi
___	___	R	198	Rebuttal witness statement of Raymond E. Grunzinger	Grunzinger
___	___	R	199C	3M summary report from Grunzinger re analysis of Seibu sheting dated March 13, 1986 (RDX 14) 3M CONFIDENTIAL	Grunzinger

UNITED STATES INTERNATIONAL TRADE COMMISSION
Washington, D.C.
Before Paul J. Luckern
Administrative Law Judge

In the Matter of	)	
	)	
CERTAIN HIGH INTENSITY	)	Investigation No. 337-TA-268
RETROREFLECTIVE SHEETING	)	

CERTIFICATE OF SERVICE

I hereby certify that the foregoing COMPLAINANT'S FINAL HEARING EXHIBIT LIST -- PHYSICAL EXHIBITS was served today, 20 February, 1988, upon the following:

Kenneth R. Mason, Secretary
U.S. International Trade Commission
500 E Street S.W.
Room 112
Washington, D.C. 20436
(Original and 6 copies)

The Hon. Paul J. Luckern
Administrative Law Judge
U.S. International Trade Commission
500 E Street S.W.
Room 213
Washington, D.C. 20436
(2 copies)

Marcia H. Sundeen, Esq.
Commission Investigative Attorney
Office of Unfair Import Investigations
U.S. International Trade Commission
500 E Street S.W.
Room 401M
Washington, D.C. 20436
(1 copy)

Counsel for Respondents

Edward M. Lebow
KELLEY DRYE & WARREN
Suite 600
1330 Connecticut Ave. N.W.
Washington, D. C. 20036
(1 copy)

Re: Investigation No. 337-TA-268
In the Matter of CERTAIN HIGH INTENSITY
RETROREFLECTIVE SHEETING

Counsel for Respondents

Stuart Lubitz
Paul L. Gardner
SPENSLEY HORN JUBAS & LUBITZ
1880 Century Park East
Suite 500
Los Angeles, CA 90067
(1 copy)

Albert L. Underhill

UNITED STATES INTERNATIONAL TRADE COMMISSION
WASHINGTON, D. C.

Before Paul J. Luckern
Administrative Law Judge

DOCKET/USITC

In the Matter of

CERTAIN HIGH INTENSITY RETROREFLECTIVE SHEETING

Investigation No. 337-TA-268

COMPLAINANT'S FINAL HEARING EXHIBIT LIST

PHYSICAL EXHIBITS

Obj	Off	Rec	No.	Description and Purpose	Sponsoring Witness
___	___	R	1	Seibu Ultralite high intensity sheeting, encapsulated lens type, accused infringing product	
___	___	R	2	3M Scotchlite high intensity sheeting, encapsulated lens type, post 1982	
___	___	R	3	3M Scotchlite engineer grade sheeting, enclosed lens type	
___	___	R	4	3M demonstrative brochure, engineer grade/high intensity grade reflective sheeting samples	Richelsen
___	___	R	5	Stop sign (McKenzie sheeting) from Ramsey County	Erickson
___	___	R	6	Stop sign (McGrath sheeting) from Florida	Erickson
___	___	R	7	DeVries test sample (RDX 7)	DeVries
___	___	R	8	DeVries test sample (RDX 8)	DeVries
___	___	R	9	DeVries test sample (RDX 9)	DeVries
___	___	R	10	DeVries test sample (RDX 10)	DeVries
___	___	R	11	DeVries test sample (RDX 11)	DeVries

___	___	R	12	DeVries test sample (RDX 12)	DeVries
___	___	R	13	DeVries test sample (RDX 13)	DeVries
___	___	R	14	DeVries test sample (RDX 14) envelope	DeVries
___	___	R	15	Photographs of test equipment used by DeVries (RDX 141-145)	DeVries
___	___	R	16	Photographs of soluability tests run by Devries on ULG (RDX 147)	DeVries
___	___	R	17	Microphotographs of DeVries testing of ULG (RDX 148)	DeVries
___	___	R	18	DeVries test sample bottle	DeVries
___	___	R	19	DeVries test sample bottle	DeVries
___	___	R	20	DeVries test sample bottle	DeVries
___	___	R	21	DeVries test sample bottle	DeVries
___	___	R	22	DeVries test sample bottle	DeVries
___	___	R	23	DeVries test sample	DeVries
___	___	R	24	DeVries test sample envelope	DeVries
___	___	R	25	DeVries test sample	DeVries
___	___	R	26	DeVries test sample	DeVries
___	___	R	27	DeVries test sample	DeVries
___	___	R	28	DeVries test sample	DeVries
___	___	R	29	DeVries test sample envelope	DeVries
___	___	R	30	DeVries test sample	DeVries
___	___	R	31	DeVries test sample	DeVries
___	___	R	32	DeVries test sample	DeVries
___	___	R	33	DeVries test sample	DeVries
___	___	R	34	DeVries test sample	DeVries
___	___	R	35	DeVries test sample envelope	DeVries
___	___	R	36	DeVries test sample	DeVries

___	___	R	37	DeVries test sample	DeVries
___	___	R	38	DeVries test sample	DeVries
___	___	R	39	DeVries test sample envelope	DeVries
___	___	R	40	DeVries test sample	DeVries
___	___	R	41	DeVries test sample	DeVries
___	___	R	42	DeVries test sample	DeVries
___	___	R	43	DeVries test sample	DeVries
___	___	R	44	DeVries test sample envelope	DeVries
___	___	R	45	DeVries test sample	DeVries
___	___	R	46	DeVries test sample	DeVries
___	___	R	47	DeVries test sample	DeVries
___	___	R	48	DeVries test sample	DeVries
___	___	R	49	DeVries test sample envelope	DeVries
___	___	R	50	DeVries test sample	DeVries
___	___	R	51	DeVries test sample	DeVries
___	___	R	52	DeVries test sample	DeVries
___	___	R	53	DeVries test sample	DeVries
___	___	R	54	DeVries test sample	DeVries
___	___	R	55	DeVries test sample	DeVries
___	___	R	56	DeVries test sample	DeVries
___	___	R	57	DeVries test sample	DeVries
___	___	R	58	Transcript of Scott Chapman deposition taken November 10, 1987	
___	___	R	58AC	Transcript of Scott Chapman deposition taken November 10, 1987, CONFIDENTIAL PORTION	
___	___	R	59	Transcript of Scott Chapman deposition taken January 10, 1988	
___	___	R	60	Transcript of Sadao Kobayashi deposition taken November 11 - 13, 1987	

—	—	R	61	Transcript of Sadao Kobayashi deposition taken November 29 - December 1, 1987	
—	—	R	62	Transcript of Dave Ebihara deposition taken January 11, 1988	
—	—	R	63	Blowup chart of Claim 1 of McGrath	
—	—	R	64	Blowup chart of McGrath drawings	
—	—	R	65	Blowup chart of Gebhard drawings	
—	—	R	66	Blowup chart of Palmquist '680 drawings	
—	—	R	67	Blowup chart of McKenzie drawings	
—	—	R	68	Blowup chart of Seibulite Ultralite construction from Seibulite brochure	
—	—	R	69	Blowup of Columns 1 and 2 of McGrath patent	DeVries
—	—	R	70	Videotape of tests of Seibu materials	DeVries
—	—	R	71	DeVries test sample on Seibu materials	DeVries
—	—	R	72	DeVries test sample on Seibu materials	DeVries
—	—	R	73	DeVries test sample on Seibu materials	DeVries
—	—	R	74	DeVries test sample on Seibu materials	DeVries
—	—	R	75	DeVries test sample on Seibu materials	DeVries
—	—	R	76	DeVries solubility test sample on Seibu sheeting (bottles)	DeVries
—	—	R	77	Microphotograph of Seibu materials	DeVries
—	—	R	78	Sample of Seibu materials used for microphotograph	DeVries
—	—	R	79	Solubility tests on McGrath high intensity materials	DeVries
—	—	R	80	Photographs of tests on McGrath high intensity materials	DeVries
—	—	R	81	DeVries test sample on McGrath high intensity materials.	DeVries

___	___	R	82	DeVries test sample on McGrath high intensity materials.	DeVries
___	___	R	83	DeVries test sample on McGrath high intensity materials.	DeVries
___	___	R	84	DeVries test sample on McGrath high intensity materials.	DeVries
___	___	R	85	Bingham sketch of enclosed lens layers	Bingham
___	___	R	86	DeVries sketch re interphase adhesion	DeVries
___	___	R	87C	Figures re Seibulite inventory SEIBU CONFIDENTIAL	Chapman
___	___	R	88	Kobayashi sketch re failure occurrences	Kobayashi
___	___	R	89	Kobayashi sketch re test samples	Kobayashi
___	___	R	90	Kobayashi sketch re test samples	Kobayashi
___	___	R	91	Kobayashi sketch re 180 degree peel test	Kobayashi
___	___	R	92	Kobayashi sketch re tests done beginning in July 1987	Kobayashi
___	___	R	93	Tamte sketch re McGrath and Lemelson	Tamte

UNITED STATES INTERNATIONAL TRADE COMMISSION
Washington, D.C.
Before Paul J. Luckern
Administrative Law Judge

In the Matter of	)	
	)	
CERTAIN HIGH INTENSITY	)	Investigation No. 337-TA-268
RETROREFLECTIVE SHEETING	)	

CERTIFICATE OF SERVICE

I hereby certify that the foregoing COMPLAINANT'S FINAL HEARING EXHIBIT LIST -- DOCUMENTARY EXHIBITS was served today, 20 February, 1988, upon the following:

Kenneth R. Mason, Secretary
U.S. International Trade Commission
500 E Street S.W.
Room 112
Washington, D.C. 20436
(Original and 6 copies)

The Hon. Paul J. Luckern
Administrative Law Judge
U.S. International Trade Commission
500 E Street S.W.
Room 213
Washington, D.C. 20436
(2 copies)

Marcia H. Sundeen, Esq.
Commission Investigative Attorney
Office of Unfair Import Investigations
U.S. International Trade Commission
500 E Street S.W.
Room 401M
Washington, D.C. 20436
(1 copy)

Counsel for Respondents

Edward M. Lebow
KELLEY DRYE & WARREN
Suite 600
1330 Connecticut Ave. N.W.
Washington, D. C. 20036
(1 copy)

Re: Investigation No. 337-TA-268
In the Matter of CERTAIN HIGH INTENSITY
RETROREFLECTIVE SHEETING

Counsel for Respondents

Stuart Lubitz
Paul L. Gardner
SPENSLEY HORN JUBAS & LUBITZ
1880 Century Park East
Suite 500
Los Angeles, CA 90067
(1 copy)

Albert L. Underhill

ALJ Exhibit List

ALJ1 - Kobayashi February 4, 1988 Deposition Transcript

CERTAIN HIGH INTENSITY RETROREFLECTIVE SHEETING Inv. No. 337-TA-268

CERTIFICATE OF SERVICE

I, Kenneth R. Mason, hereby certify that the attached (Public Version) Initial Determination was served upon Marcia H. Sundeen, Esq., and upon the following parties via first class mail, and air mail where necessary, on May 5, 1988.

Kenneth R. Mason, Secretary
U.S. International Trade Commission
500 E Street, S.W.
Washington, D.C.

FOR COMPLAINANT MINNESOTA MINING AND MANUFACTURING COMPANY

Robert T. Edell
Albert L. Underhill
MERCHANT, GOULD, SMITH, EDELL, WELTER & SCHMIDT
1600 Midwest Plaza Building
801 Nicollet Mall
Minneapolis, Minnesota 55402

FOR RESPONDENTS SEIBU POLYMER CHEMICAL CO., LTD. and SEIBULITE INTERNATIONAL, INC.

Edward M. Lebow
KELLEY, DRYE & WARREN
Suite 600
1330 Connecticut Ave., N.W.
Washington, D.C. 20036

Michael Lublinski
KELLEY, DRYE & WARREN
624 South Grand Avenue
Los Angeles, CA 90017

Stuart Lubitz
Paul L. Gardner
SPENSLEY HORN JUBAS & LUBITZ
1880 Century Park East
Fifth Floor
Los Angeles, CA 90067